New

Spring Lock/Air Release Model

Robotic Hand Changer

Model STR

KOSMEK
Harmony in Innovation

Robotic Hand Changer
Spring Lock / Air Release Model

Model STR

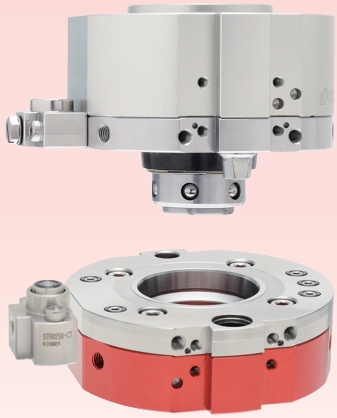

Pneumatic Single-Acting Robotic Hand Changer Clamped by Spring

High Accuracy：3μm, High Rigidity, Safe, Tool Fall Prevention,
Number of Ports and Air Consumption are Reduced

Clamped by Spring：
Safe・Simple・Energy-Saving

Connected State：Locked by Spring

Maintains connected state even if air pressure decreases **Safe**

Zero air consumption when connected
Energy Saving

Disconnected State：Released by Air

Selectable from 2 methods.

M5 Piping Joint Model

Operated by one air port
Simple Control

Leakless Coupler Model

Even during a malfunction,
Prevents Tool from Falling

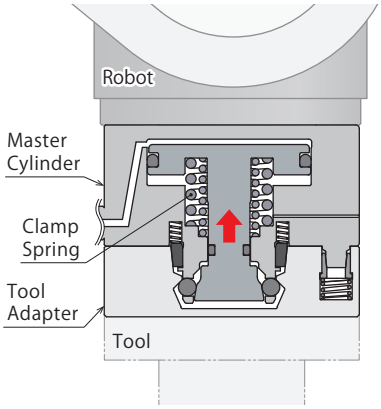

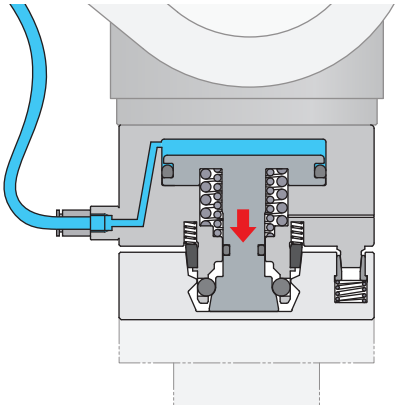

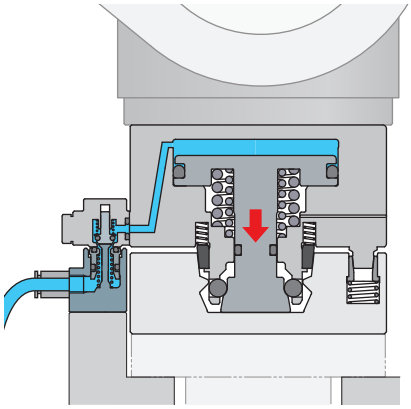

Features

• Operated by one air port. Safe and simple control.

• Zero air consumption during connection.

Air pressure is required only when disconnecting a tool (release operation).
Air supply is not required during connection.

M5 Piping Joint Model

One air port is required.
Locked by spring, released by air

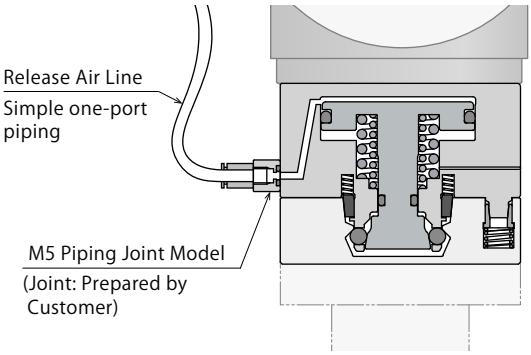

Leakless Coupler Model

Air supply from the robot side is not required.
Can be released only at the stocker position.

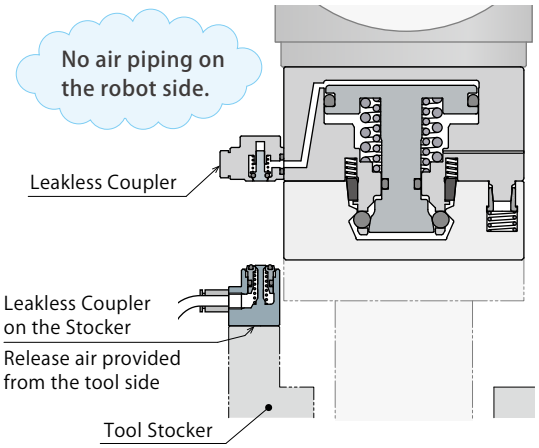

• Prevent a tool fall caused by operating error : Leakless Coupler Model

Robotic hand changer can be disconnected (released) only at a designated position (when leakless coupler is connected). Preventing a tool fall caused by valve operating error during robot teaching.

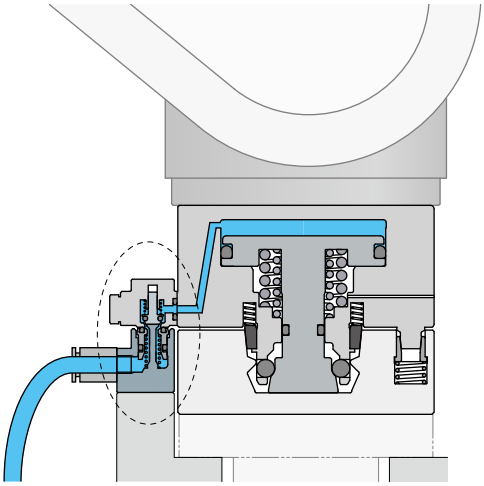

Only when leakless coupler is connected:
Able to disconnect (release) with air supply.

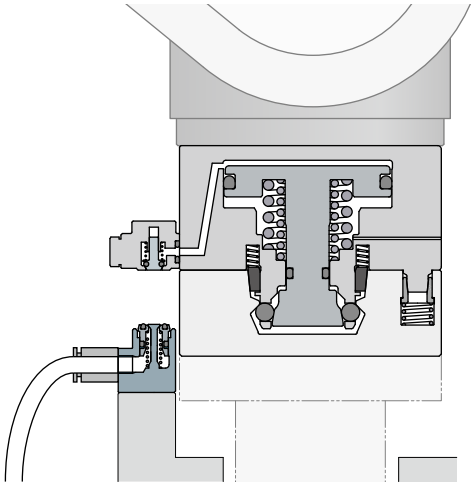

Can be disconnected and connected only at the tool stocker, preventing a tool fall.

Cross Section

M5 Piping Joint Model

One Port for Operating Air　Spring Lock / Air Release

Master Cylinder : Model No.

STR0250 - M □ Blank / C □ - □

4 Piping Option
Blank : M5 Piping Joint

Point
Safe・Energy-Saving
Clamp Spring
Prevent a tool fall with spring connection.

Point
Action Confirmation
Magnet
Enables action confirmation with a sensor.

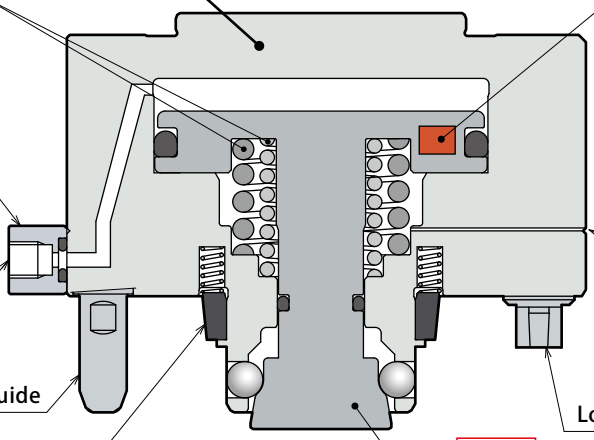

Air Port：M5×5 Port

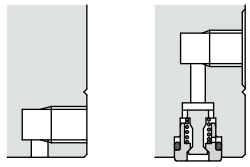

Point
High Accuracy and Rigidity
Taper Sleeve
No backlash due to the dual surface contact by the movable taper sleeve. Quality improvement by preventing deflection and chattering due to the work load.

Point
Lift-up Function (Detaching Function)
Piston Rod
When disconnecting, the piston rod detaches tool adaptor preventing moment stop caused by adhesion and galling. When connecting, it prevents damage of the locating part.

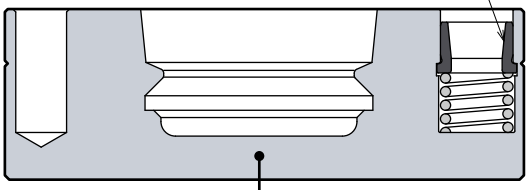

Air Port：M5×5 Port

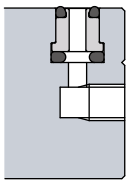

Tool Adapter : Model No.

STR0250-T

Sold Separately
External Option

Able to mount a variety of electrode and air joint options.
※ Refer to P.27 for further information.

Action Description : M5 Piping Joint Model

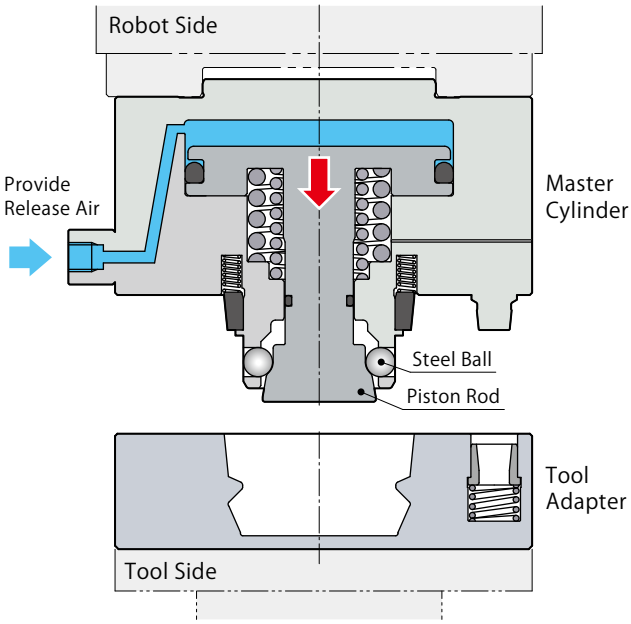

Disconnected State (Released State)

Provide air to the release air port.
The piston rod is pushed down with thrust force caused by release air. At this time the steel balls are free to move (set inside).

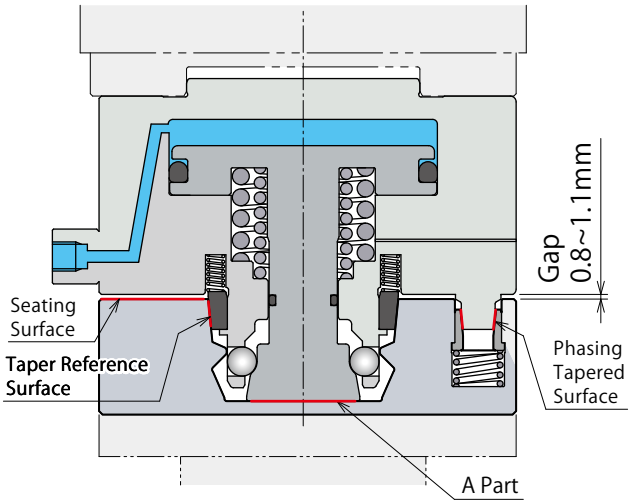

Just Before Connection (Setting State) Lifted State (Detached State)

Setting State: When the master cylinder is lowered and stopped where the gap is 0.8 ~ 1.1mm.
At this time there is a moderate gap at taper reference surface and seating surface. It prevents locating mechanism part from damage. When detached, the piston pushes out A part to prevent moment stop caused by fixation or galling.

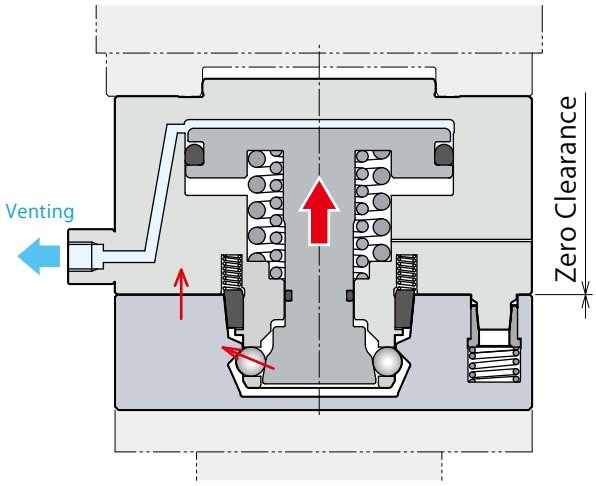

Connected State (Locked State)

When release air is turned OFF, the clamp spring pulls up the piston rod and pulls the tool adapter via the steel ball to the seating surface. When the tool adapter is pulled, the taper reference surface is pushed to the phasing tapered surface. The taper sleeve is centered in a reference axis (body), and locating is completed.

Cross Section

Leakless Coupler Model

Operated only at the tool stocker, preventing a tool fall.

Master Cylinder : Model No.

STR0250 - M □ Blank / C □ - □

4 Piping Option
C : Leakless Coupler

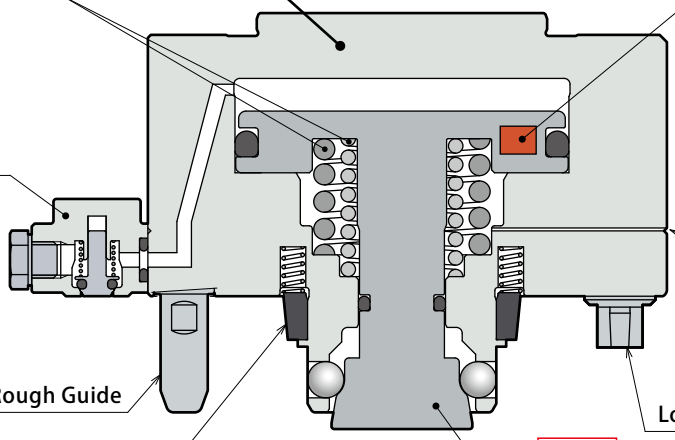

Point

Safe・Energy-Saving

Clamp Spring

Prevent a tool fall with spring connection.

Point

Pressure Holding

Leakless Coupler

Maintain release air pressure in a disconnected state.
Air supply from the robot side is not required.

Point

Action Confirmation

Magnet

Enables action confirmation with a sensor.

Air Port : M5×5 Port

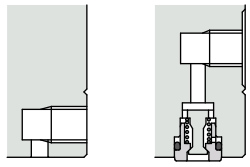

No Check Valve (Standard) | With Check Valve

Point

High Accuracy and Rigidity

Taper Sleeve

No backlash due to the dual surface contact by the movable taper sleeve.
Quality improvement by preventing deflection and chattering due to the work load.

Point

Lift-up Function (Detaching Function)

Piston Rod

When disconnecting, the piston rod detaches tool adaptor preventing moment stop caused by adhesion and galling.
When connecting, it prevents damage of the locating part.

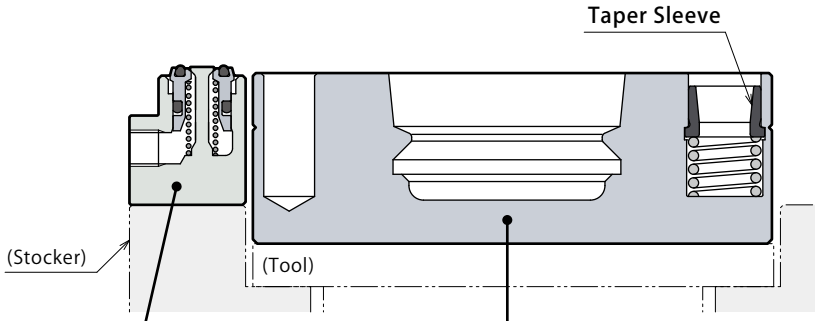

Air Port : M5×5 Port

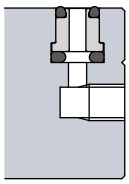

Leakless Coupler on Stocker : Model No.

STR0250-CT

Provides air supply from the stocker.

Tool Adapter : Model No.

STR0250-T

Sold Separately

External Option

Able to mount a variety of electrode and air joint options.

※ Refer to P.27 for further information.

Combination Example with Air Compressor

— In an Environment with No Air Supply —

Combining Robotic Hand Changer with Compact Compressor.
This system generates air with electric supply for tool change.

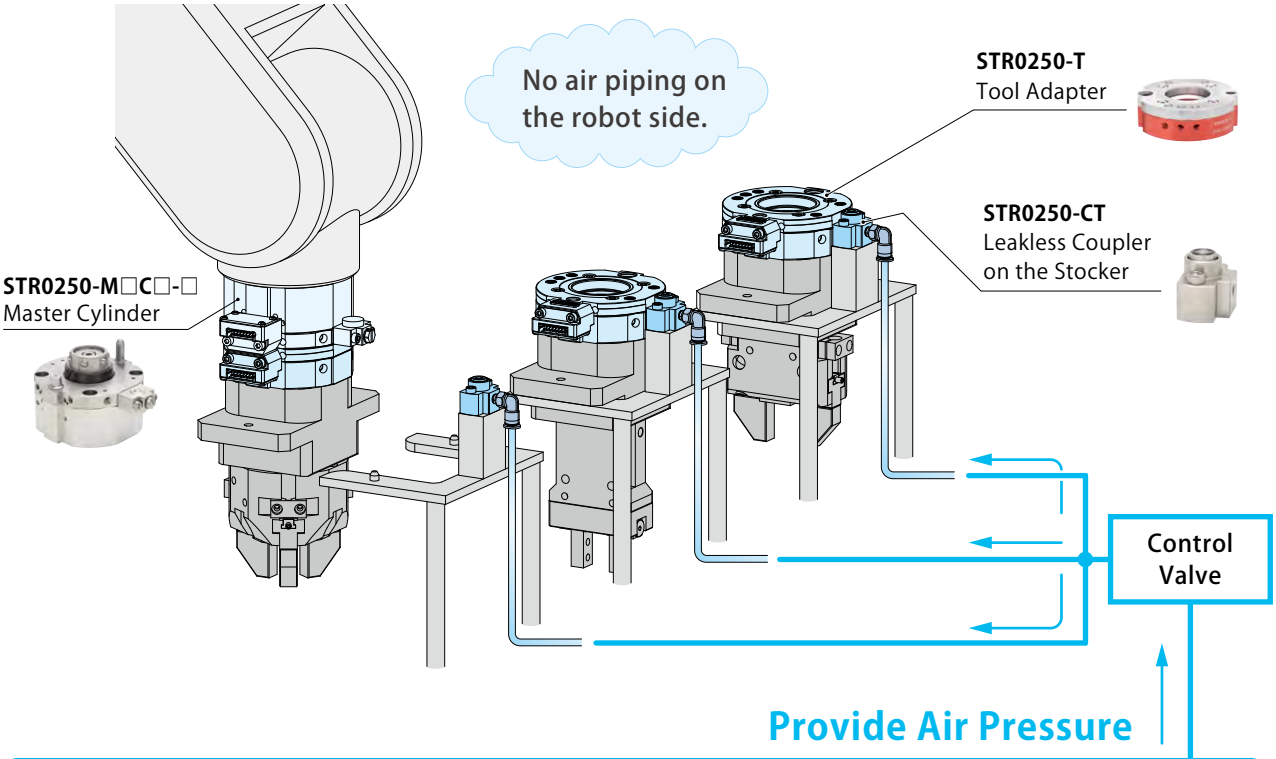

Suitable for Localized Air Supply Compact Air Compressor

Model AYW0010

Air Discharge up to 0.55MPa with DC24V power
Low Noise・Low Vibration・Compact

※ Refer to our website for detailed specifications of AYW0010.

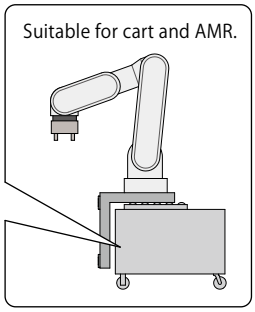

Reference Air Circuit

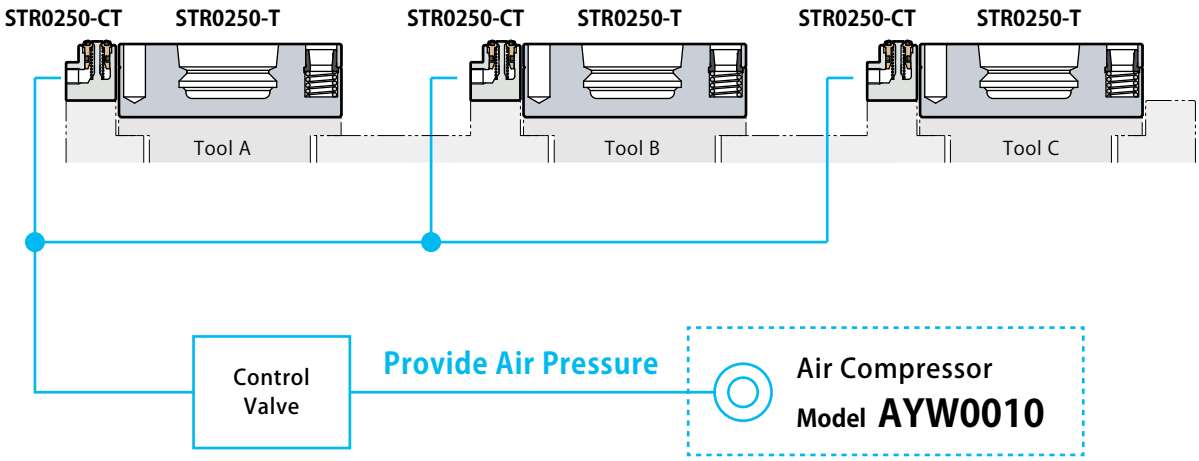

Action Description：Leakless Coupler Model

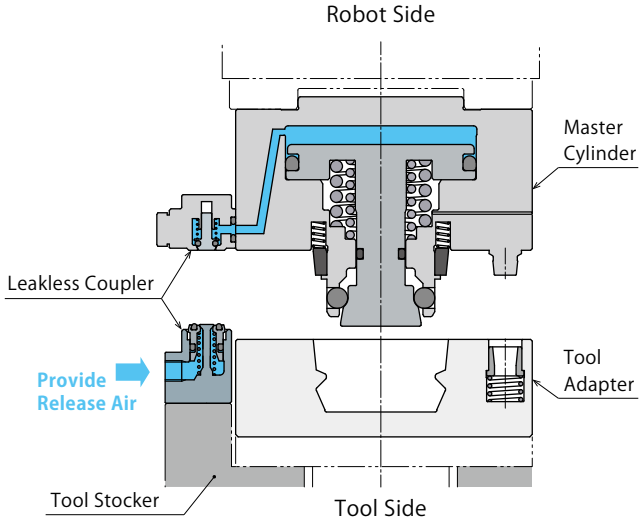

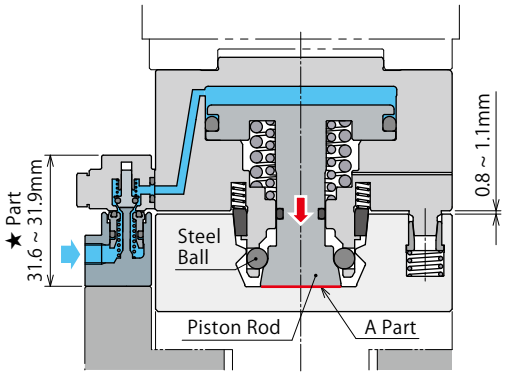

Release Air ON

Lock Procedure ① ※2

Released State Maintained

Turn ON the release air.

When operating for the first time / When not operated for a long period of time

Refer to the note ※1 and follow the release procedure before the lock procedure.

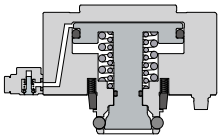

Fully-Stroked State

Release Procedure ④

Released State Maintained

Lift up the master cylinder to proceed to the next tool. ※5

Release Air ON

Lock Procedure ②

Just Before Connection (Setting State)

Lower the master cylinder, and move it to the position where ★ part is 31.6~31.9mm. ※3 ※4

(Gap between the master cylinder the and tool adapter is 0.8 ~ 1.1mm)
Leakless coupler is in a connected state.
At this time there is a moderate gap at taper reference surface and seating surface. It prevents locating mechanism part from damage.
Refer to P.20 for the allowable position offset during teaching.

Release Procedure ③

Lifted State (Detached State)
Disconnected State (Released State)

Turn ON the release air. ※4

Air pressure is provided to the master cylinder to disconnect.
When disconnected, the piston pushes out A part to prevent moment stop caused by fixation or galling.
In the disconnected state, the piston rod is pushed down with thrust force caused by release air. At this time the steel balls are free to move (set inside).
The tool adapter is forcibly detached by the detaching (lifting) function of the master cylinder.
It is recommended to provide a cushioning mechanism between the tool adapter and the tool stocker.

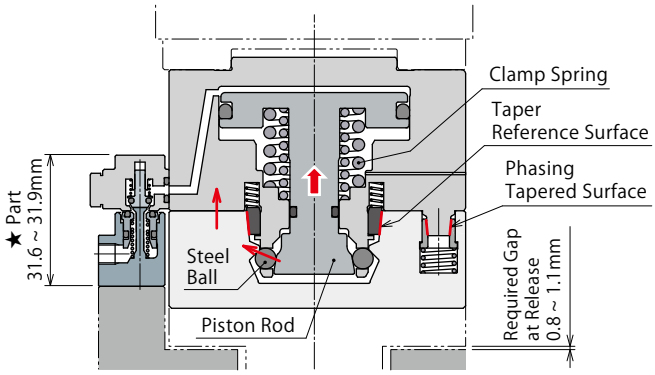

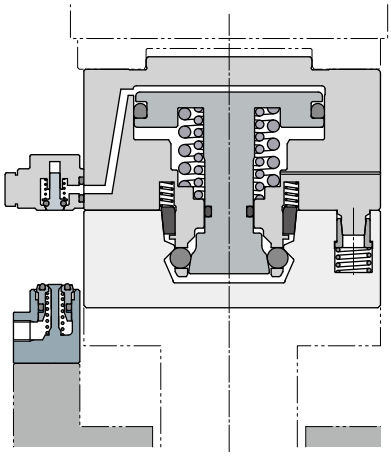

Release Air OFF

Release Air OFF

Lock Procedure ③

Connected State (Locked State)

Turn OFF the release air.

The air pressure in the master cylinder is released and it moves into the connected state. In the connected state, the clamp spring pulls up the piston rod and pulls the tool adapter via the steel ball to the seating surface. When the tool adapter is pulled, the taper reference surface is pushed to the phasing tapered surface. The taper sleeve is centered in a reference axis (body), and locating is completed.

Lock Procedure ④

Locked State Maintained

Release Procedure ②

Just Before Releasing

Lower the master cylinder, and move it to the position where ★ part is 31.6~31.9mm. ※3

(Required gap at release is 0.8 ~ 1.1mm)
Leakless coupler is in a connected state.
Refer to P.20 for the allowable position offset during teaching.

Release Procedure ①

Locked State Maintained

Turn OFF the release air.

Notes :

※1. At shipment, the master cylinder is in the fully stroked state (the steel balls are protruded and the tool adapter cannot be connected), with no air pressure retained in the master cylinder. In this case, follow the release procedure without the tool adapter installed to maintain the released state.

※2. When the released state is not maintained and becomes the fully stroked state, follow the procedure ※1 to maintain the released state before use.

※3. Do not connect the robotic hand changer when contaminants are adhered on each connecting surface.

※4. When connecting the leakless coupler, reaction force is generated. Please make sure to connect with greater force than the reaction force. For details on leakless coupler reaction force, refer to the specifications on P.14.

※5. When in the released state, proceed to the lock operation as soon as possible. It may move into the fully stroked state due to a slight pressure reduction over time.

Port Option Please select one from the two functions.

Master Cylinder : Model No.

STR 025 0 - M A/F □□ - □

3 Port Option

A : With Air Blow Port (Standard)
F : With Seat Check Port

3 Port Option

A Anti-Contamination : Air Blow Function

Enables air blow by supplying air to the air blow port.
When connecting, there is a moderate gap between the taper reference surface and seating surface that enables high accuracy. This allows for effective cleaning with air blow, contamination prevention and longer operational life.

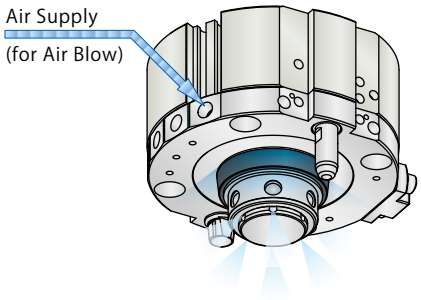

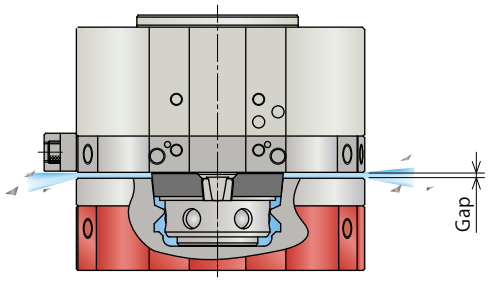

● Circuit Reference

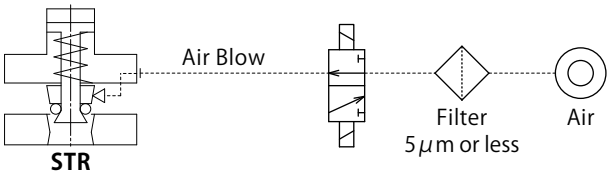

3 Port Option

F Close Contact Check : Seat Check Function

Close contact of master cylinder and tool adapter is confirmed by installing an air sensor to the seat check port.
If they are not in close contact and there is a gap on the seating surfaces (connection failure), air will leak.
It detects the connected condition precisely since the air sensor turns on when they are connected properly.
※ Air sensor must be installed separately.

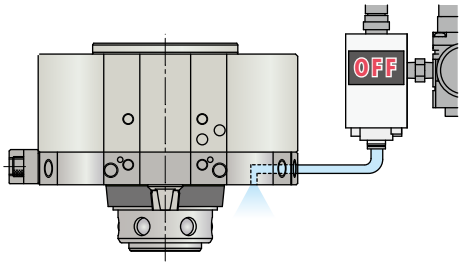

Before Connection : Air Sensor OFF

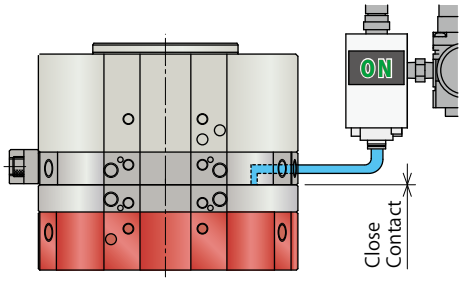

When Connected : Air Sensor ON

● Circuit Reference

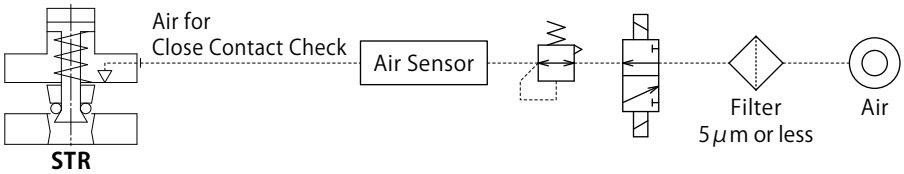

Joint Option (Air Port Part) Please select one from the two options.

Master Cylinder : Model No.

STR 025 0 - M □□□ - Blank / S

6 Joint Option

Blank : Without Check Valve (Standard)
S : With Check Valve

Air Joint Function

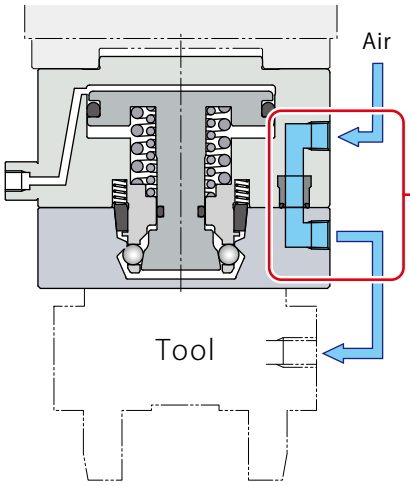

Air Joint Part

Selectable from two air port joint options.

Without Check Valve (Standard) ※1

6 Joint Option **Blank**

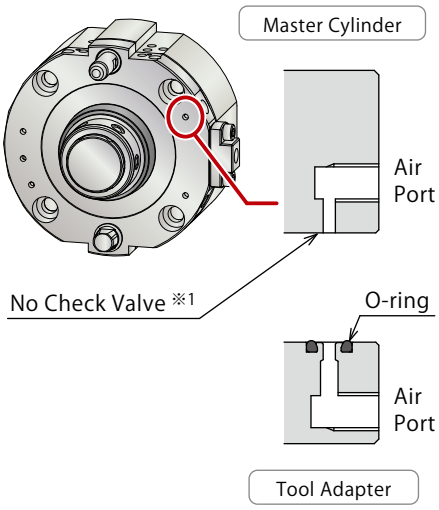

With Check Valve

6 Joint Option **S**

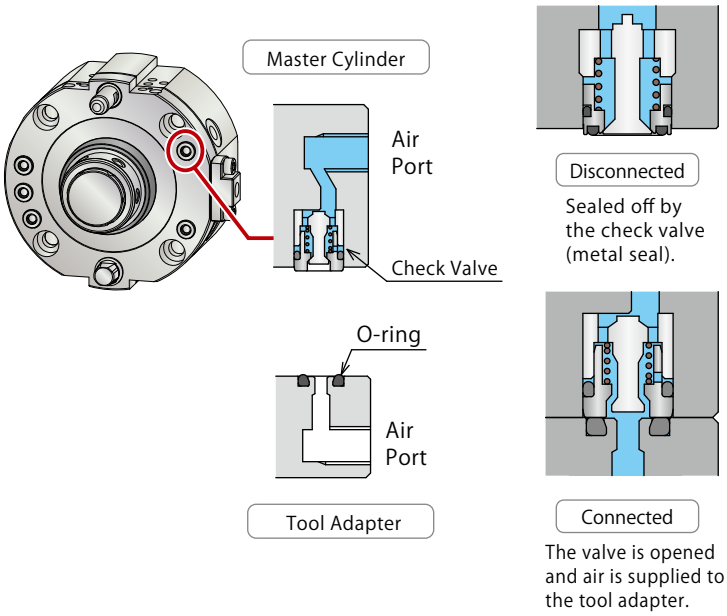

Note :

※1. For the option 'without check valve (standard)', a 3-position closed-center solenoid valve is recommended since the air ports are always open.

Action Confirmation Sensor Specifications

Please select one from the three options.

Master Cylinder : Model No.

STR 025 0 - M ☐☐ **Blank / N / P** - ☐

5 Action Confirmation Sensor

Blank : Without Sensor
N : Sensor NPN Output (Cable 1m)
P : Sensor PNP Output (Cable 1m)

Action Confirmation Sensor

Release Confirmation Sensor
- 5 Option **N** : JES0000-02LGS
- 5 Option **P** : JES0000-02LGPS

Lock Confirmation Sensor
- 5 Option **N** : JES0000-02LGN
- 5 Option **P** : JES0000-02LGPN

Sensor Signal

Disconnected (Released) State		Connected (Locked) State		Fully Stroked State※1	
Release Confirmation Sensor	ON	Release Confirmation Sensor	ON	Release Confirmation Sensor	OFF
Lock Confirmation Sensor	OFF	Lock Confirmation Sensor	ON	Lock Confirmation Sensor	ON

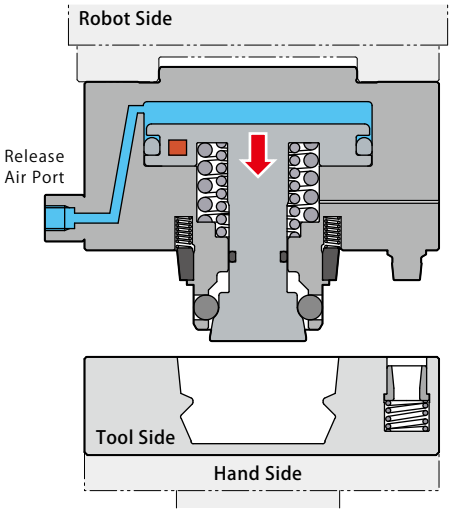

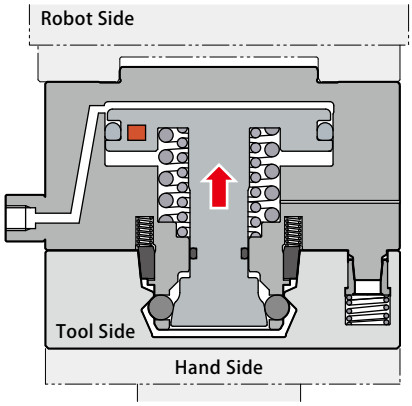

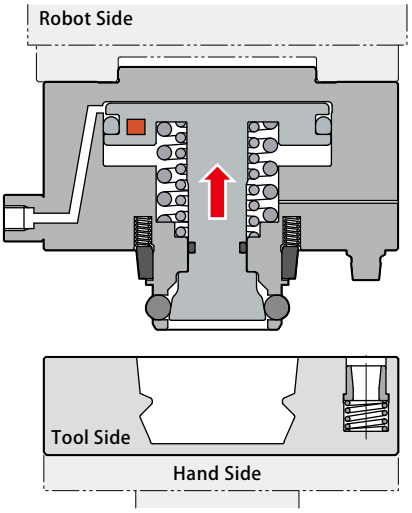

Note : ※1. It refers to the state when the steel balls are protruded, and the tool adapter cannot be connected.

Sensor Specifications

Model No.		5 Sensor Option N	5 Sensor Option P
Sensor Model No.	Release Confirmation Sensor	JES0000-02LGS (Cable Color : Gray)	JES0000-02LGPS (Cable Color : Gray)
	Lock Confirmation Sensor	JES0000-02LGN (Cable Color : Black)	JES0000-02LGPN (Cable Color : Black)
Output Specification		NPN (ON when in proximity)	PNP (ON when in proximity)
Output Current		15mA Max.	80mA Max.
Current Consumption		4mA Max.	12mA Max.
Wiring Method		3-Wire	
Applicable Load		Relay, Programmable Logic Controller (PLC)	
Voltage		DC 5 ~ 24V	
Response Speed		16μsec or less	
Case Material		GF Reinforced PBT : Black	
Indicator Light		Red	
Withstand Voltage		AC1000V (for 1 minute / Packaged Charging Part / between the Case)	
Insulation Resistance		DC250V (20MΩ or more in Megohms, between the Case)	
Operating Temperature Range		−20℃ ~ +85℃ (Make sure no condensation)	
Operating Humidity Range		20 ~ 95%RH	
Protection Grade		IP67	
Cable Length		1m	

Note :
1. Refer to the JES catalog for detailed specifications of the sensor (model : JES).

Electric Circuit Diagram

5 Sensor Option N

NPN Output

JES0000-02LGN
JES0000-02LGS

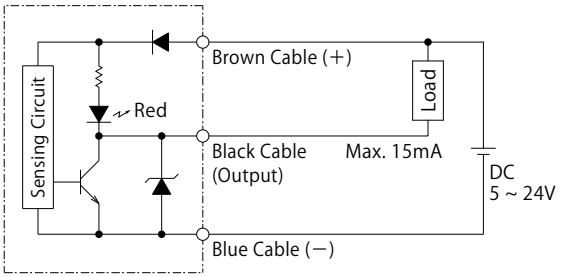

Cylinder Sensor Circuit

5 Sensor Option P

PNP Output

JES0000-02LGPN
JES0000-02LGPS

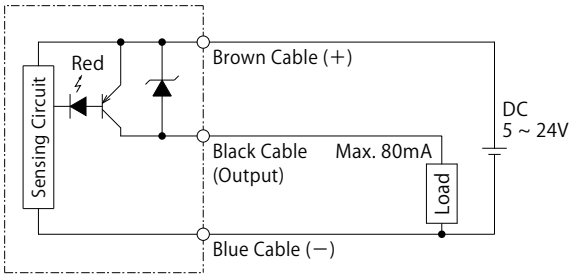

Cylinder Sensor Circuit

External Dimensions

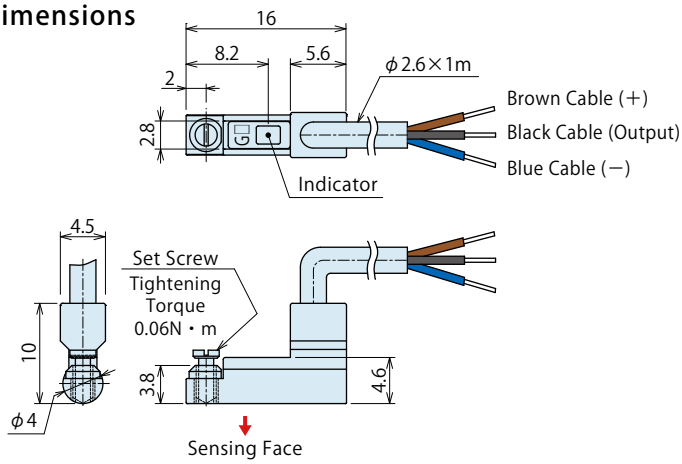

Model No. Indication

Master Cylinder (Robot Side)

STR 025 0 - M A □ □ - □

1 2 3 4 5 6

Tool Adapter (Tool Side)

STR 025 0 - T

1 2

Leakless Coupler on the Stocker side

※ Required when the master cylinder model no. 4 piping option is **C**: Leakless Coupler.

STR 025 0 - CT

1 2

1 Payload

025 : 25 kg

2 Design No.

0 : Revision Number

3 Port Option

A : With Air Blow Port (Standard)
F : With Seat Check Port

4 Piping Option ※1

Blank : M5 Piping Joint
C : Leakless Coupler

Blank

M5 Thread

C

Leakless Coupler

5 Action Confirmation Sensor

Blank : Without Sensor (Standard)
N : Sensor **NPN** Output (Cable 1m)
P : Sensor **PNP** Output (Cable 1m)

6 Joint Option (Air Port Part)

Blank : Without Check Valve (Standard)
S : With Check Valve

Note:
※1. The piping option can be changed with replacement components (sold separately). Refer to P.23 for further information.

Specifications

Model No.				STR0250
Payload ※1			kg	25
Repeatability			mm	0.003
Release Cylinder Capacity			cm^3	8.64
Lift Stroke (Detaching Stroke)			mm	0.8
Release Air Pressure	Max. Operating Pressure		MPa	0.7
	Min. Operating Pressure		MPa	0.35
	Withstanding Pressure		MPa	1.0
Air Blow Pressure			MPa	0.4 ~ 0.5
Connecting Force			kN	1.1
Holding Force			kN	2.2
Lifting Force (Detaching Force)	at 0.7MPa		kN	0.85
	at 0.5MPa		kN	0.45
	at 0.35MPa		kN	0.15
Allowable Static Moment※1	Bending Direction		N·m	60
	Twisting Direction		N·m	80
Operating Temperature			℃	0 ~ 70
Usable Fluid				Dry Air
Weight	Master Cylinder	4 Piping Option **Blank**	g	About 610
		4 Piping Option **C**	g	About 625
	Tool Adapter		g	About 400
	Leakless Coupler		g	About 35
Number of Air Ports	Thread Size × Number of Ports			M5×0.8×5 Ports
Air Port Min. Passage Area	6 Joint Option **Blank**		mm^2	3.1 (Equal to ϕ2)
	6 Joint Option **S**		mm^2	1.7 (Equal to ϕ1.5)
Allowable Offset while Teaching				Refer to P.20
4 Piping Option **C** Leakless Coupler Reaction Force	at 0.7MPa		kN	0.07
	at 0.5MPa		kN	0.06
	at 0.35MPa		kN	0.05
	at **P** MPa		kN	0.05 × **P** + 0.03

Note :
※1. Please consider both the payload and allowable static moment when selecting the product.

Point **The whole surface is a seating surface High Rigidity Possible !!**

Estimated Calculation Formula
Allowable Bending Moment = L × F

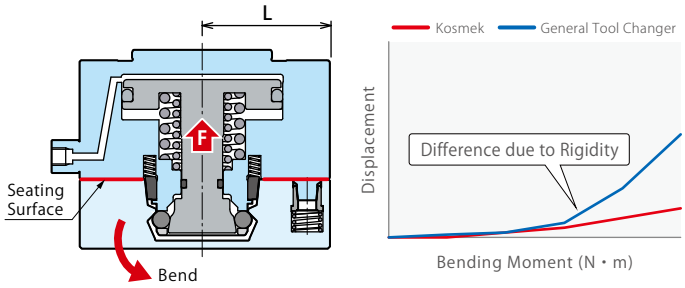

Point **Kosmek Exclusive Mechanism**
Zero Backlash ! ! Strong to Twist

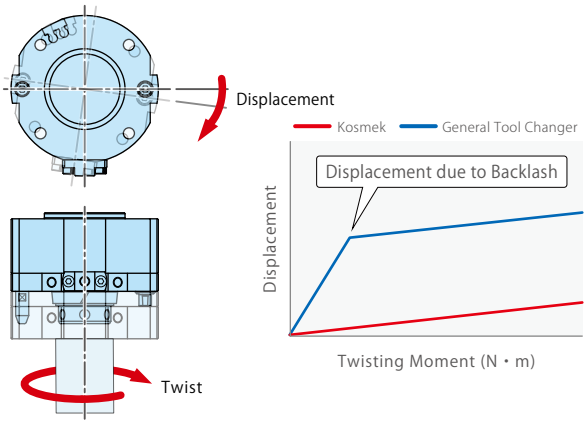

External Dimensions (STR0250-M□□)

※ This drawing shows the released state.

Master Cylinder (Without Action Confirmation Sensor)
STR0250-M□

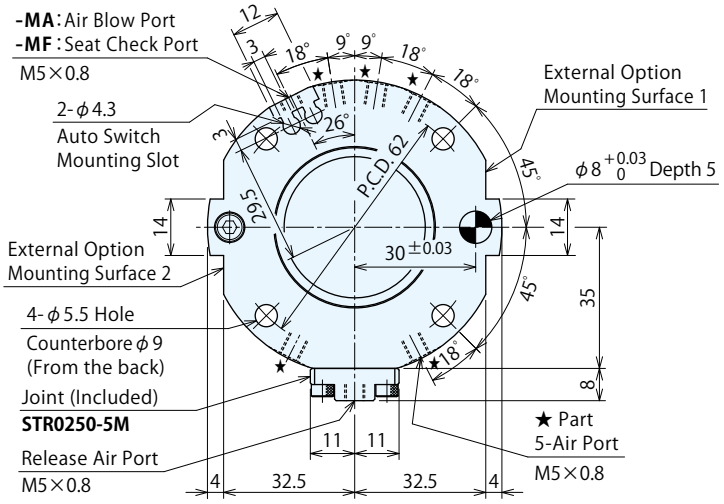

Master Cylinder (Action Confirmation Sensor)
STR0250-M□N
STR0250-M□P

※ The only difference between the standard and the 'without sensor' option is whether the sensor is included or not.
※ Refer to P.11 for further information of the sensor.

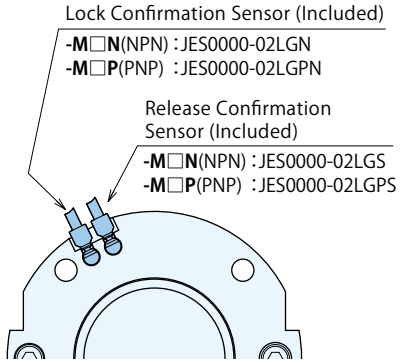

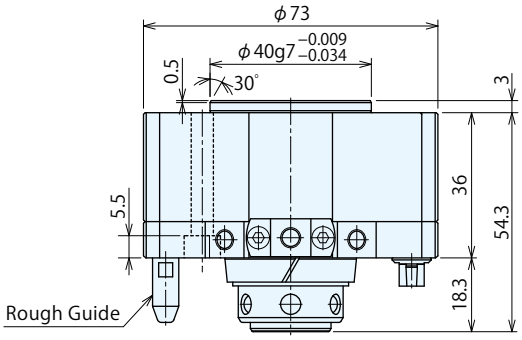

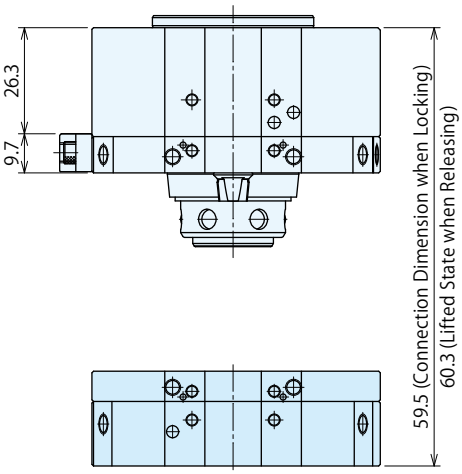

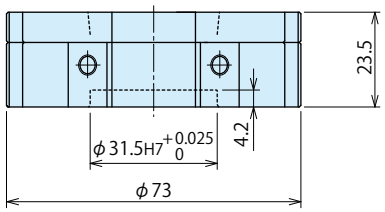

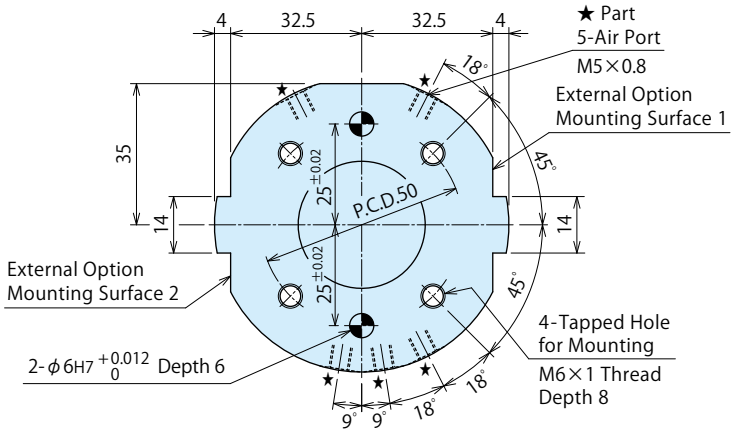

Tool Adapter
STR0250-T

External Dimensions (STR0250-M□□-S : with Check Valve)

※ This drawing shows the released state.

Master Cylinder (Without Action Confirmation Sensor)
STR0250-M□-S

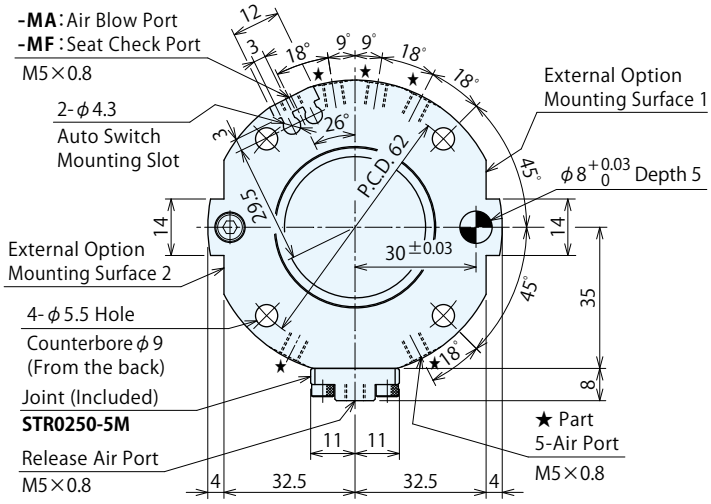

Master Cylinder (Action Confirmation Sensor)
STR0250-M□N-S
STR0250-M□P-S

※ The only difference between the standard and the 'without sensor' option is whether the sensor is included or not.
※ Refer to P.11 for further information of the sensor.

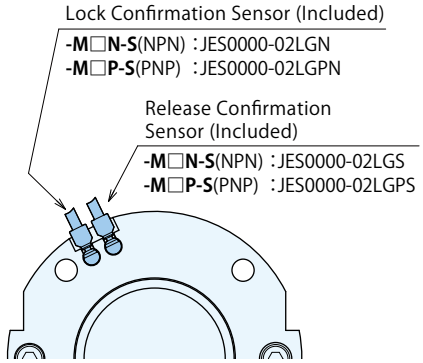

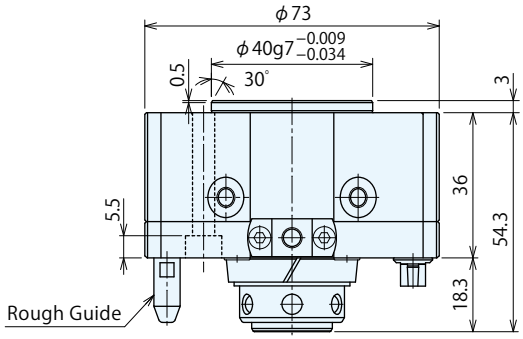

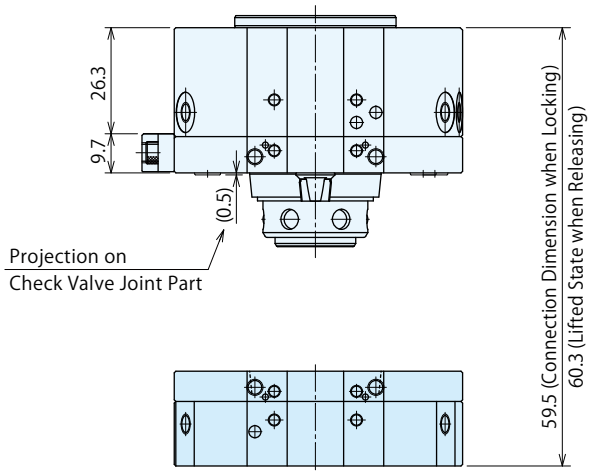

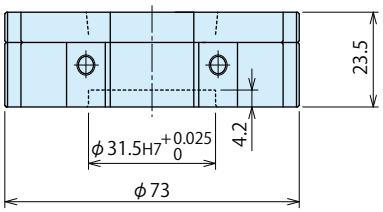

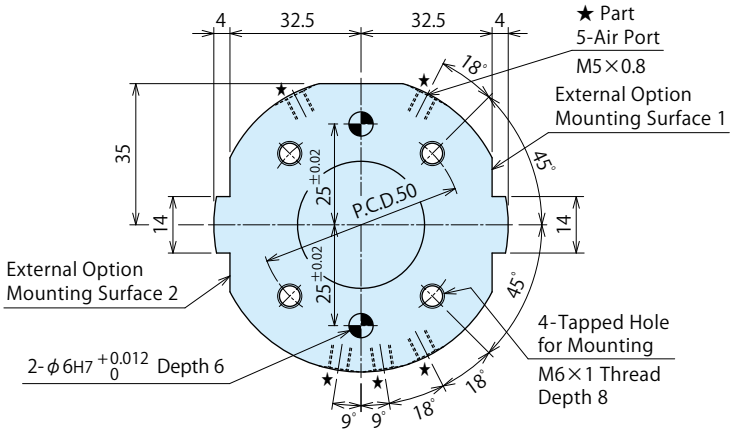

Tool Adapter
STR0250-T

STR0250-M□□-S (with Check Valve)
Joint Structure

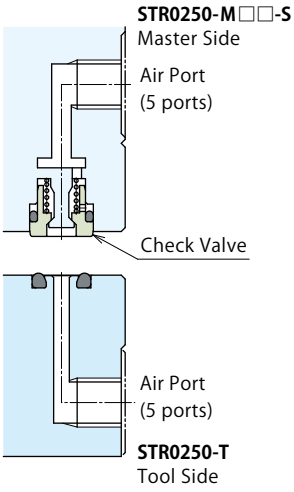

External Dimensions (STR0250-M□C□ : Leakless Coupler Model)

※ This drawing shows the released state.

Master Cylinder (Without Action Confirmation Sensor)
STR0250-M□C

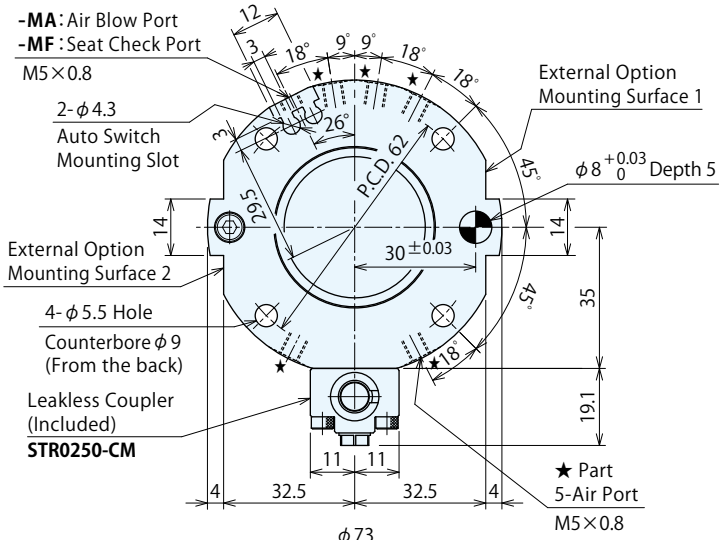

Master Cylinder (Action Confirmation Sensor)
STR0250-M□CN
STR0250-M□CP

※ The only difference between the standard and the 'without sensor' option is whether the sensor is included or not.
※ Refer to P.11 for further information of the sensor.

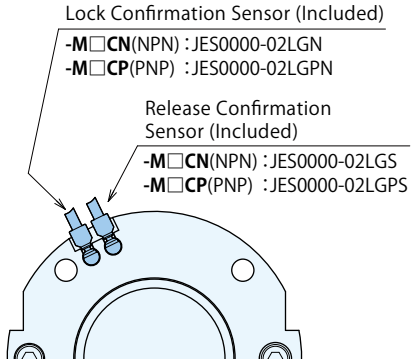

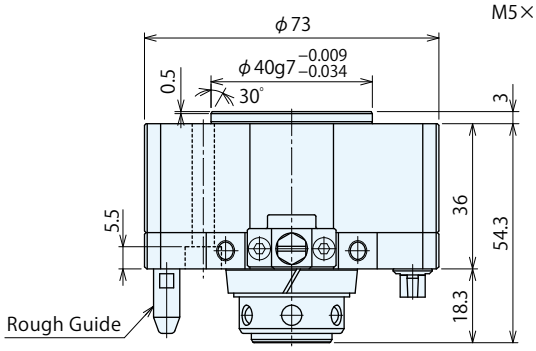

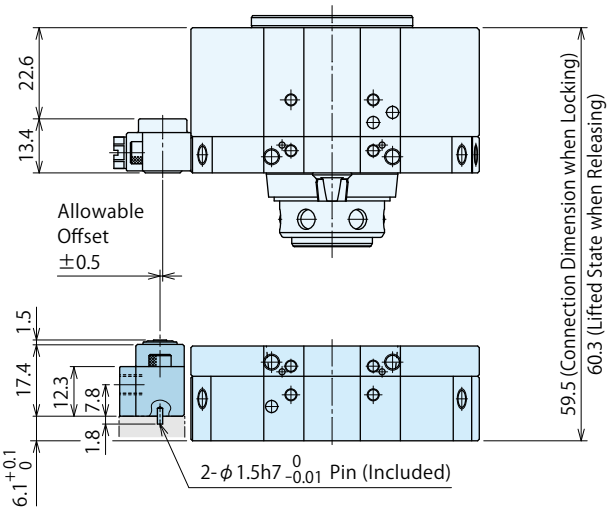

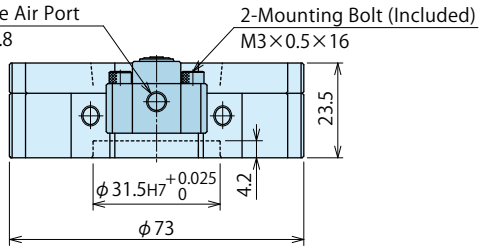

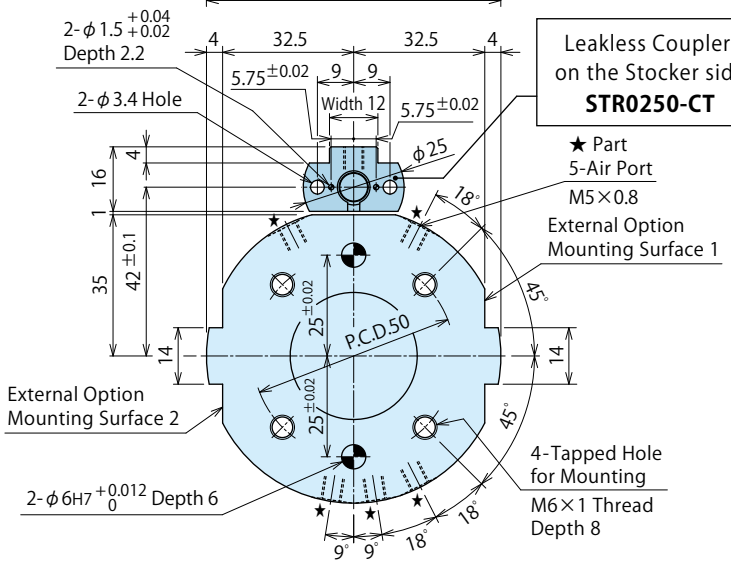

Leakless Coupler
on the Stocker side
STR0250-CT

Tool Adapter
STR0250-T

External Dimensions (STR0250-M□C□-S : Leakless Coupler Model, with Check Valve)

※ This drawing shows the released state.

Master Cylinder (Without Action Confirmation Sensor)
STR0250-M□C-S

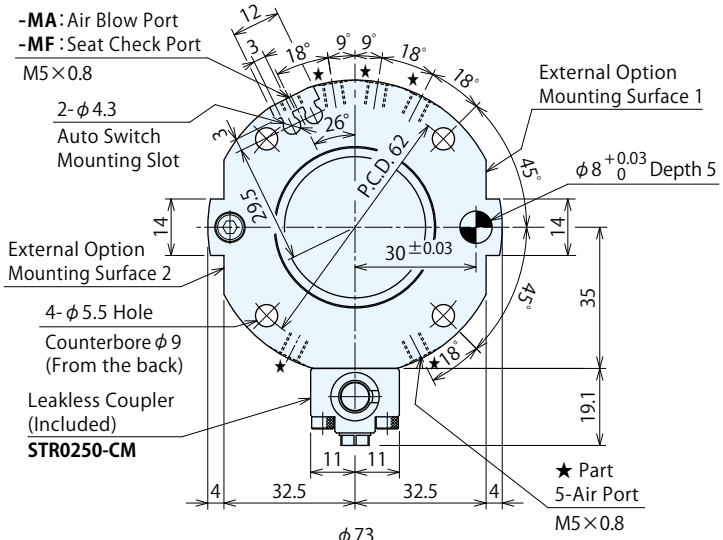

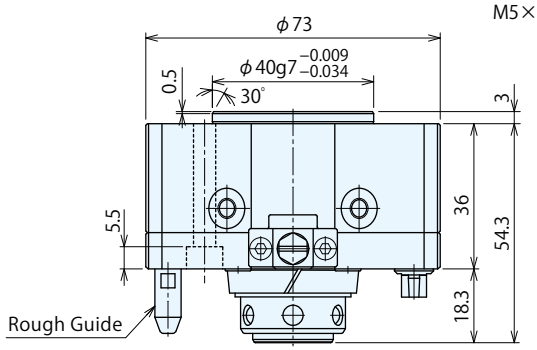

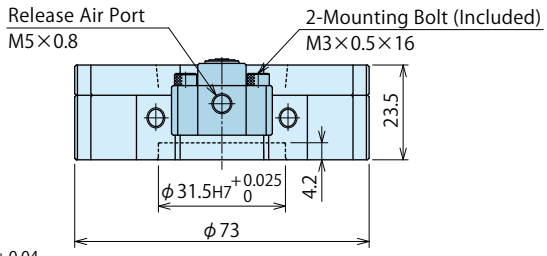

Master Cylinder (Action Confirmation Sensor)
STR0250-M□CN-S
STR0250-M□CP-S

※ The only difference between the standard and the 'without sensor' option is whether the sensor is included or not.
※ Refer to P.11 for further information of the sensor.

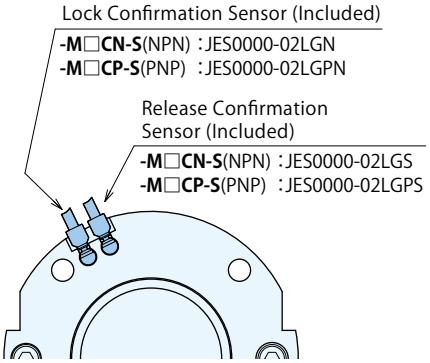

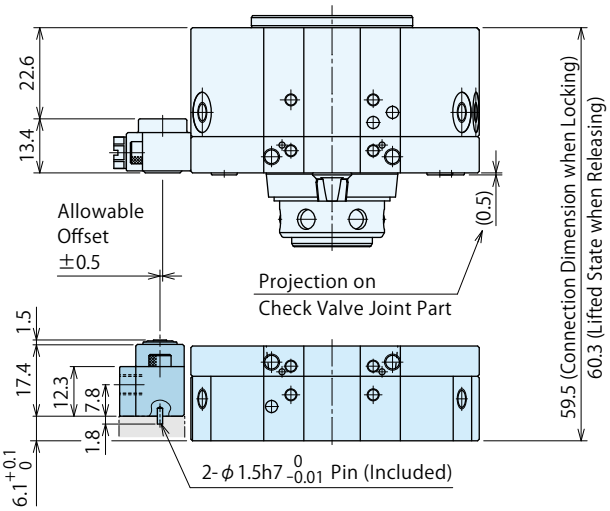

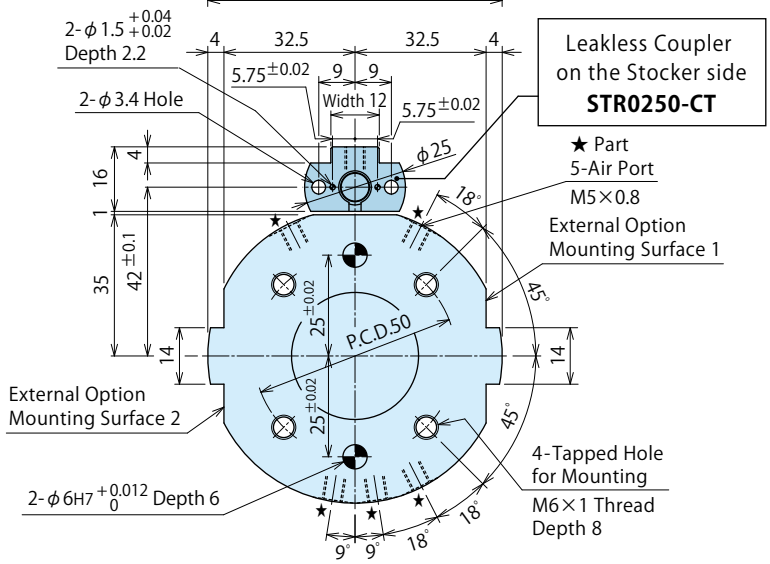

Leakless Coupler on the Stocker side
STR0250-CT

Tool Adapter
STR0250-T

STR0250-M□C□-S (with Check Valve)
Joint Structure

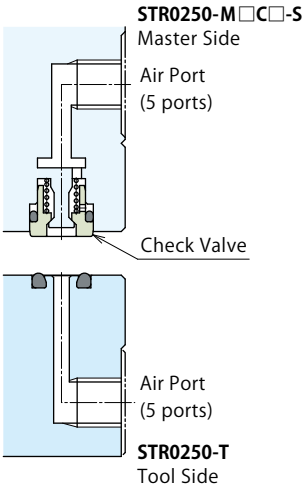

Cautions

Notes for Design

1) Check Specifications
- Please use each product according to the specifications.
- Operating air pressure is Max. 0.7 MPa and Min. 0.35MPa.

2) Note for Single Use of STR Robotic Hand Changer
- Applying withstanding pressure without mounting on a robot or a plate leads to damage on the product. Make sure to supply air after setting STR on a robot or a plate.

3) Combination of Master Cylinder, Tool Adapter and Leakless Coupler
- Please refer to the below table for combination of Master Cylinder, Tool Adapter and Leakless Coupler.

Master Cylinder	Tool Adapter	Leakless Coupler
STR0250-M□□-□	**STR0250-T**	**-**
STR0250-M□C□-□	**STR0250-T**	**STR0250-CT**

4) Allowable static moment
- The allowable static moment should be within the range of the bending moment and the twisting moment.

Model No.	Bending Moment	Twisting Moment
STR0250	60 N・m	80 N・m

5) About **STR0250-M□□N-□/M□□P-□**
- Action confirmation sensor option: **STR0250-M□□N-□/M□□P-□** uses JES Cylinder Sensor. For further information, refer to P.11 and the product catalog of JES.

6) About **STR0250-M□C□-□**
- Do not connect the leakless coupler model: **STR0250-M□C□-□** when contaminants are adhered on connecting surfaces. Otherwise it cannot be sealed properly due to contaminants.

7) Hand Changing (Attaching/Detaching) in a Horizontal Position
- When connecting/disconnecting the Robotic Hand Changer in a horizontal position, make sure not to apply excessive moment on master cylinder. When selecting the robotic hand changer, check the specifications and ensure a sufficient safety margin for the payload and the allowable static moment.
  When connecting, make sure the tool side has no lifting or tilting that is larger than the allowable position offset range.
  Also, do not fix it completely on the tool stand, and make a margin (clearance) within the allowable position offset range. Otherwise, this will affect repeatability.

8) Air Pressure Circuit Reference
STR is locked by spring and released by air, so make sure not to provide air pressure when it is connected.
For safety, please select and set the solenoid valve not to provide air pressure to the release port when the switch is turned OFF.
If air pressure is provided to the release port, STR may drop a tool (hand). However, please note that when the power is turned OFF in a released state, STR will be locked.
(For leakless coupler model, only when the coupler is connected.)

① **STR0250-M□□-□** (M5 Piping Joint Model)

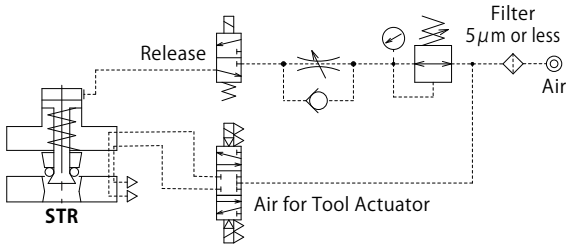

② **STR0250-M□C□-□** (Leakless Coupler Model)

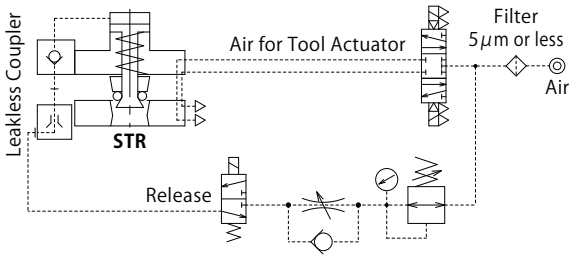

③ Using air blow with **STR0250-MA□□-□** (with Air Blow Port).

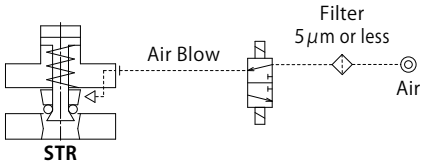

④ Using seat check with **STR0250-MF□□-□** (with Seat Check Port).

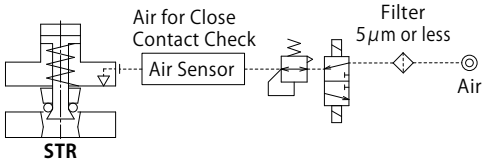

Installation Notes

1) Please supply filtered clean dry air.
- Make sure to supply filtered clean dry air.
- Oil supply with a lubricator etc. is unnecessary.

2) Preparation for Piping
- The pipeline, piping connector and fixture circuits should be cleaned and flushed thoroughly.
  The dust and cutting chips in the circuit may lead to fluid leakage and malfunction.
- There is no filter provided with this product for prevention of contaminants in the air circuit.

3) Applying Sealing Tape
- When using sealing tape, wrap with it 1 to 2 times following the screwing direction.
  When piping, be careful that contaminant such as sealing tape does not enter in products. Pieces of the sealing tape can cause air leaks and malfunction.

4) Installation/Removal of Master Cylinder/Tool Adapter/Leakless Coupler
- Please follow the tightening torque below.
  When mounting, tighten with bolts evenly to ensure proper seating.

Model No.	Bolt Size	No. of Bolts	Tightening Torque (N·m)
STR0250-M	M5 × 0.8	4	6.3
STR0250-T	M6 × 1	4	10
STR0250-CT	M3 × 0.5	2	1.3

5) Test Run Method
- If supplying a large amount of air just after installation, action time will be extremely fast leading to severe damage on robotic hand changer. Set the speed controller (Meter-in) and gradually supply air pressure.

6) Most Suitable Gap between Master Cylinder and Tool Adapter Just Before Connection (When Setting)
- The gap between master cylinder and tool adapter when connecting should be within the range of 0.8 ~ 1.1mm.
  It may not be able to connect when the gap is more than 1.1mm.

7) Most Suitable Gap between Tool Adapter and Tool Stand Just Before Disconnection
- The gap between the tool adapter and tool stand just before disconnection should be 0.8 ~ 1.1 mm.
  Tool adapter is forcibly detached with detaching (lifting) function of the master cylinder. It is recommended to install cushioning mechanism between the tool adapter and tool stand.

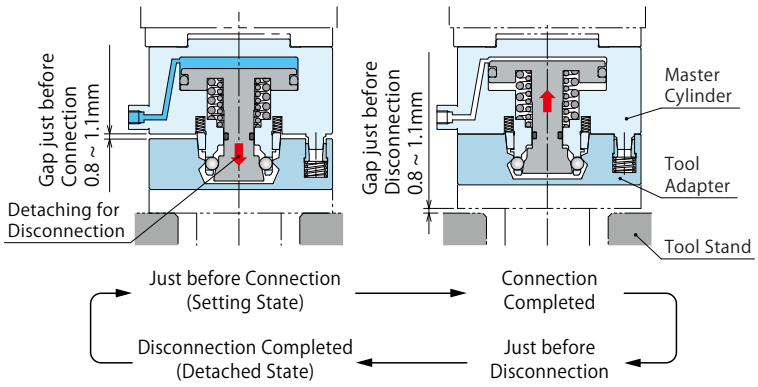

8) Allowable Offset while Teaching
- Allowable offset of the master cylinder and tool adapter while teaching should be within the range shown below.
  Tool adapter and tool stand should have space within the range of allowable offset.

① Allowable Position Offset in Horizontal Direction

Model No.	Allowable Offset Amm
STR0250	±1.0 mm

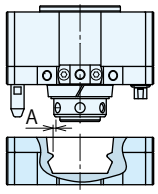

① Horizontal Position Offset

② Allowable Position Offset in Tilt Direction

Model No.	Allowable Offset θ
STR0250	θ=1.2 deg

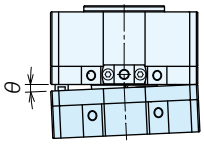

② Tilt Position Offset

③ Allowable Position Offset in Rotation Direction

Model No.	Allowable Offset θ
STR0250	θ=±2 deg

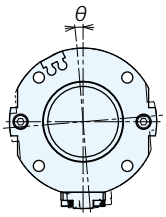

③ Rotation Position Offset

- The position offset of Leakless Coupler Model should be within the range of allowable position offset shown below.

④ Allowable Position Offset (Allowable Offset) in Horizontal Direction

Model No.	Allowable Offset Amm
STR0250-□C□	±0.5 mm

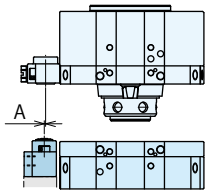

④ Horizontal Position Offset

⑤ Allowable Position Offset in Tilt Direction

Model No.	Allowable Offset θ
STR0250-□C□	θ=0.3 deg

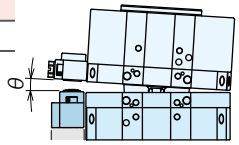

⑤ Tilt Position Offset

Cautions

Notes on Handling

1) It should be operated by qualified personnel.
- Machines and devices with hydraulic and pneumatic products should be operated and maintained by qualified personnel.

2) Do not operate or remove the product unless the safety protocols are ensured.
① Machines and devices can only be inspected or prepared when it is confirmed that the safety devices are in place.
② Before the product is removed, make sure that the above-mentioned safety devices are in place. Shut off the pressure and power source, and make sure no pressure exists in the air and hydraulic circuits.
③ After stopping the product, do not remove until the temperature drops.
④ Make sure there is no trouble/issue in the bolts and respective parts before restarting a machine or device.

3) Do not touch a master cylinder, a tool adapter or a leakless coupler while it is working. Otherwise, your hands may be injured.

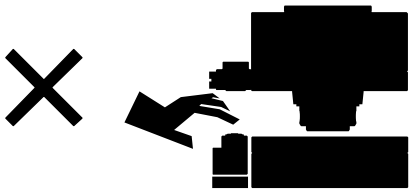

4) When the robot is in operation, make sure the safety of environment in case of a tool or workpiece detachment.

5) Do not disassemble or modify.
- If the equipment is taken apart or modified, the warranty will be voided even within the warranty period.

Maintenance and Inspection

1) Removal of the Machine and Shut-off of Pressure Source
- Before the machine is removed, make sure that safety devices and preventive devices are in place. Shut off the pressure and power source, and make sure no pressure exists in the air circuits.
- Make sure there is no abnormality in the bolts and respective parts before restarting.

2) Cleaning of Master Cylinder・Tool Adapter・Leakless Coupler
- If using the product when the seating surfaces of master cylinder, tool adapter and leakless coupler are contaminated with dirt, it may lead to locating accuracy failure, malfunction or air leakage. (Do not apply grease on the taper reference surface.)

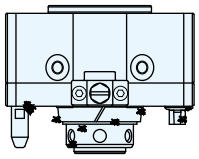

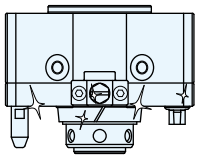

3) Regularly examine and retighten piping, mounting bolts and wires to ensure proper use.

4) Make sure to supply filtered clean dry air.

5) Make sure there is smooth action and no air leaks.
- Especially when it is restarted after left unused for a long period, make sure it can be operated properly.
If there is air leak while connecting, please contact us for overhaul and repair.

6) The products should be stored in the cool and dark place without direct sunshine or moisture.

7) Please contact us for overhaul and repair.

Warranty

1) Warranty Period

- The product warranty period is 18 months from shipment from our factory or 12 months from initial use, whichever is earlier.

2) Warranty Scope

- If the product is damaged or malfunctions during the warranty period due to faulty design, materials or workmanship, we will replace or repair the defective part at our expense.
  Defects or failures caused by the following are not covered.

① If the stipulated maintenance and inspection are not carried out.
② If the product is used while it is not suitable for use based on the operator's judgment, resulting in defect.
③ If it is used or operated in an inappropriate way by the operator. (Including damage caused by the misconduct of the third party.)
④ If the defect is caused by reasons other than our responsibility.
⑤ If repair or modifications are carried out by anyone other than Kosmek, or without our approval and confirmation, it will void warranty.
⑥ Other caused by natural disasters or calamities not attributable to our company.
⑦ Parts or replacement expenses due to parts consumption and deterioration.
(Such as rubber, plastic, seal material and some electric components.)

Damages excluding from direct result of a product defect shall be excluded from the warranty.

Accessory

Piping Option Replacement Components

Piping option of release port can be changed with replacement components (sold separately).

Provide Air Pressure from Tool Stocker Side
When Changing to Leakless Coupler Model

Option Model No. : **STR0250-CM** ※1

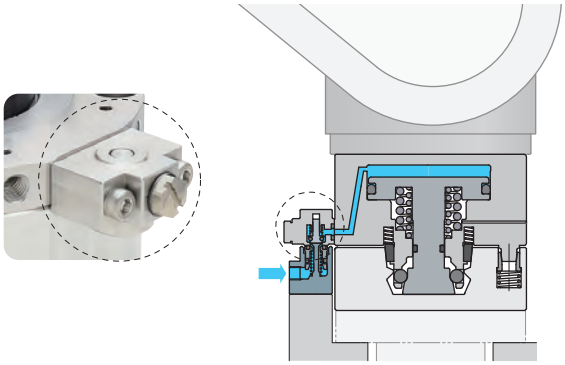

Provide Air Pressure from Robot Side
When Changing to M5 Piping Joint Model

Option Model No. : **STR0250-5M**

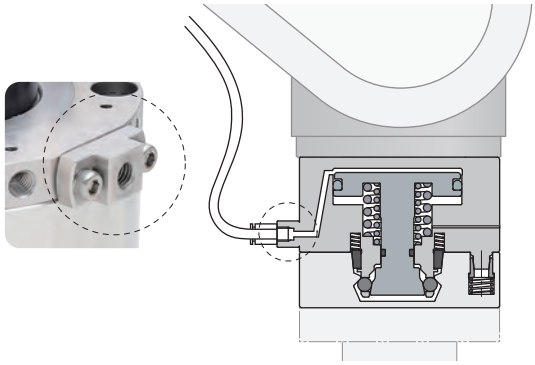

Note :
※1. Leakless Coupler on Stocker Side (Model：STR0250-CT) is required for air supply.

Model No. Indication

STR 025 0 - C M

1 2 3

1 Robotic Hand Changer (STR) Applicable Model

025 : STR0250-M

2 Design No.

0 : Revision Number

3 Piping Option

5 : M5 Piping Joint
C : Leakless Coupler

Replacement Procedure

● Removal of Accessory

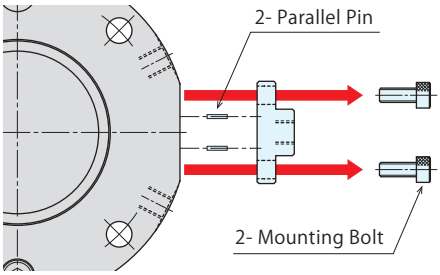

Remove the mounting bolts.

※ The parallel pins are used for positioning.
Be careful not to lose them.

● Installation of Accessory

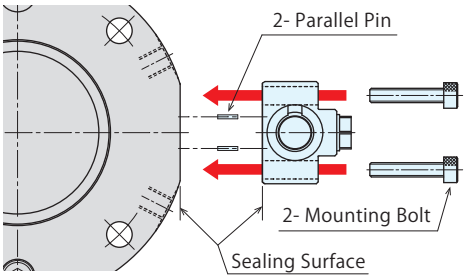

Install the mounting bolt with the following torque.

※ Please use the attached bolts and pins for installation.
Tighten them evenly to ensure proper seating.

Option Model No.	Mounting Bolt	Tightening Torque (N・m)
STR0250-5M	M3×0.5×8	1.3
STR0250-CM	M3×0.5×16	1.3

※ When contaminants are caught between the sealing surfaces, it may cause malfunction. Install the accessories in a clean environment.

Accessory

Adapter Plate for STR

Connect Robot and Robotic Hand Changer. Saves Design Time and Costs.

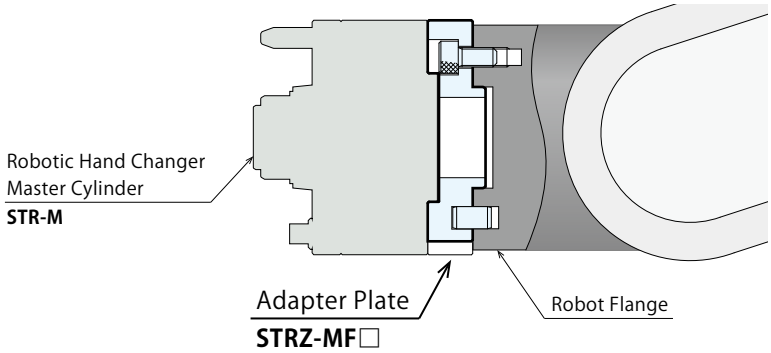

Model No. Indication (Spacer Plate)

STRZ 025 0 -MF 4

1 2 3

1 Robotic Hand Changer (STR) Applicable Model

025 : STR0250-M

2 Design No.

0 : Revision Number

3 Applicable Mounting Pattern Number

4 : ISO Mounting Pattern Number 4
6 : ISO Mounting Pattern Number 6

Combination of Mounting Pattern Number (based on ISO9409-1), Adapter Plate and STR

Mounting Pattern Number	Adapter Plate Model No.	Master Cylinder Model No.
4	**STRZ0250-MF4**	**STR0250-M□□□-□**
6	**STRZ0250-MF6**	**STR0250-M□□□-□**

Standard Shape of Mounting Pattern

Notes :
1. Please refer to the following drawings and external dimensions of STR when designing an adapter plate.
2. The drawings are for reference. Please design an adapter plate considering plate thickness, mounting direction, robot environment and others according to specifications and dimensions of each robot.

※3. There are various hole depths and thread depths for robots and tool adapter side devices. Make sure to check the external dimensions to avoid interference before use.

Mounting Pattern Number : 4

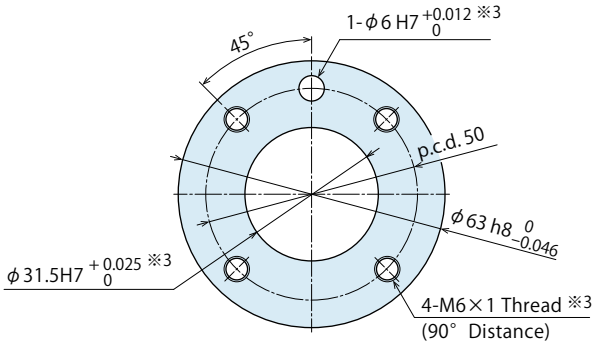

Mounting Pattern Number : 6

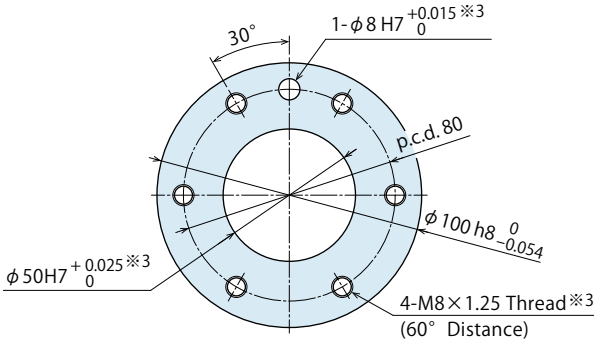

External Dimensions：STRZ0250-MF4

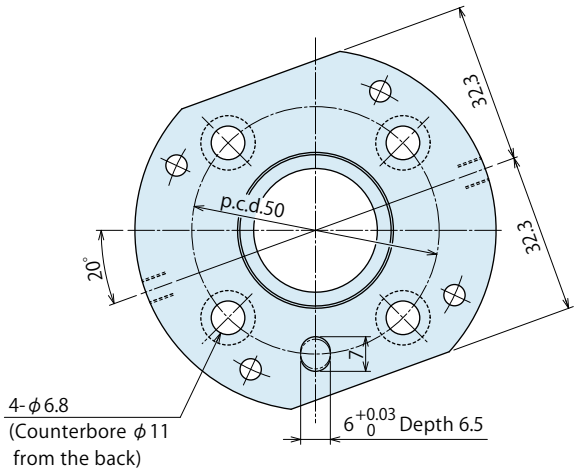

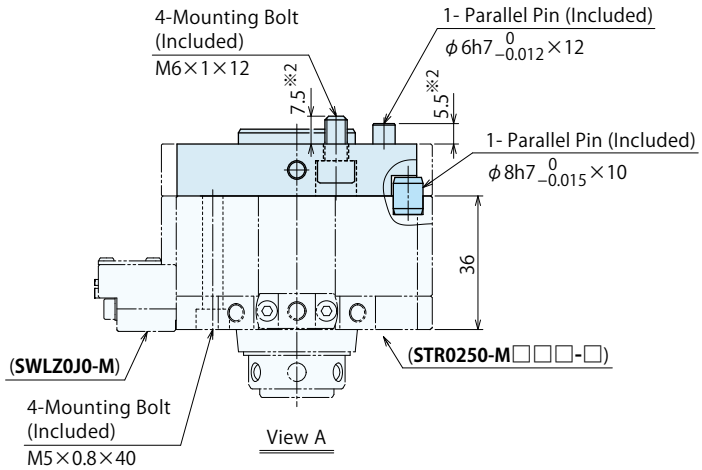

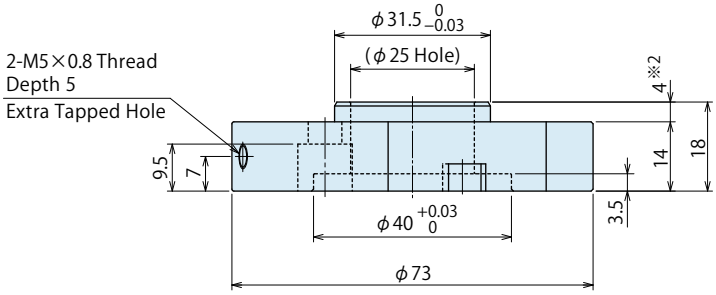

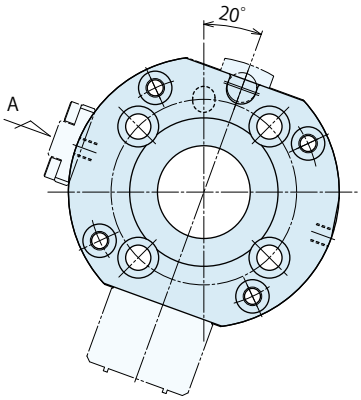

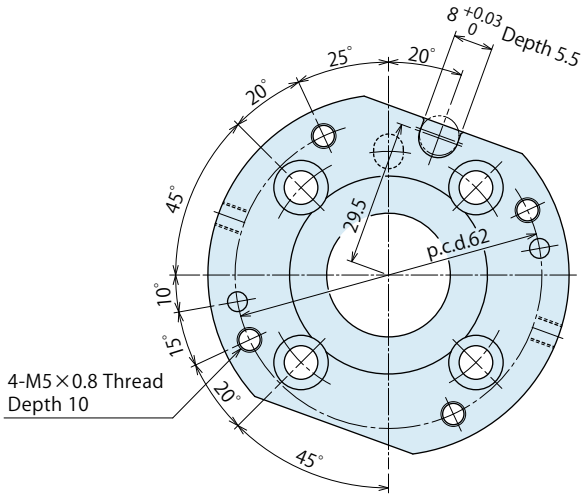

Adapter Plate Model No.	**STRZ0250-MF4**
Weight	115g ※1
Applicable Mounting Pattern No.	4
Applicable Robotic Hand Changer Model No.	**STR0250-M□□□-□**

1. Material : A2017BE-T4
   Surface Finishing : Anodized Aluminum Finishing (Red)

※1. It shows the weight of an adapter plate only.
Bolts and pins are not included.

※2. There are various hole depths and thread depths for a robot. Make sure to check the external dimensions to avoid interference before use.

Attachable External Option：Electrode

External Option		Model No.
D-sub Connector	P.41	**STRZ0D0-M**
Power Transmission	P.45	**STRZ0E0-M**
Servo Electrode	P.47	**STRZ0F0-M**
Circular Connector	P.42	**STRZ0G0-M**
High Current Transmission	P.46	**STRZ0H0-M**
Resin Connector	P.31	**SWLZ0J0-M**
Ethernet Electrode	P.53	**STRZ0L0-M**
Waterproof Electrode IP67	P.51	**SWLZ0V0-M**
Compact Waterproof Electrode IP67	P.49	**SWLZ0W0-M**

Attachable External Option：Air Joint

External Option		Model No.
4 Ports		**SWLZ0P0-M**
	P.57	**SWLZ0PZ90-M**
2 Ports	P.56	**STRZ0Q0-M**
3 Ports	P.55	**SWLZ0R0-M**

External Dimensions：STRZ0250-MF6

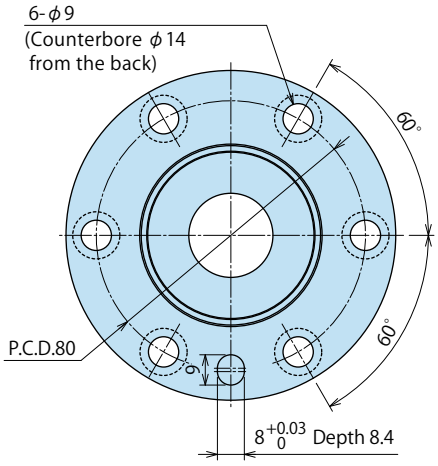

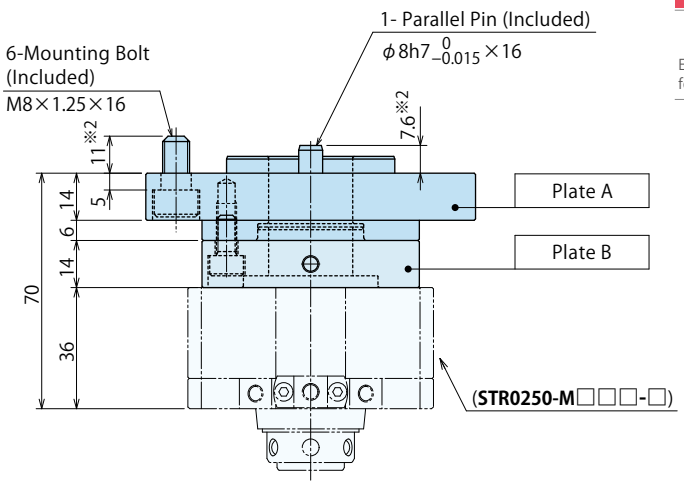

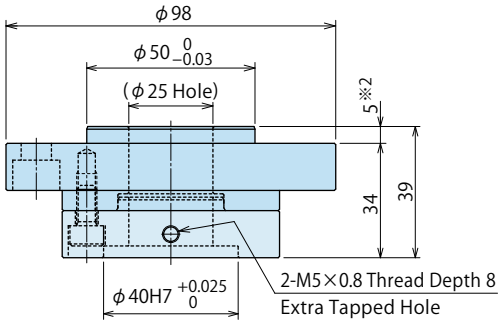

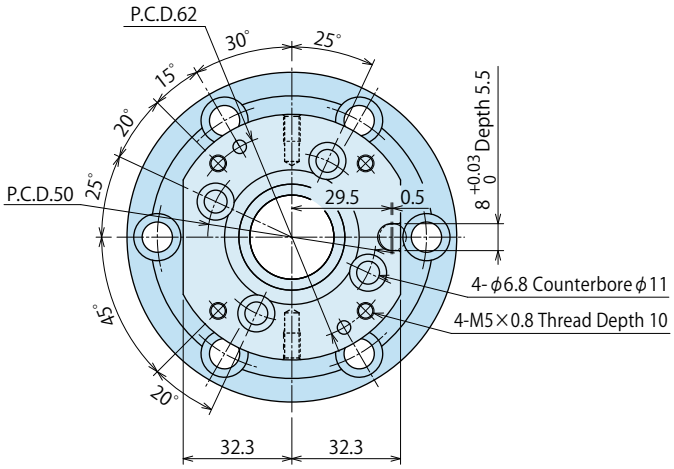

Installation Image

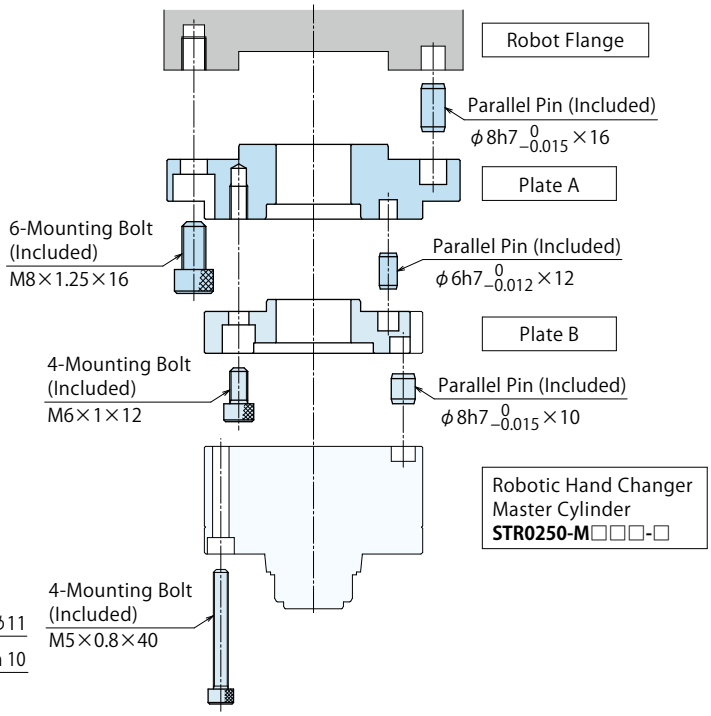

Adapter Plate Model No.	**STRZ0250-MF6**
Weight	430g ※1
Applicable Mounting Pattern No.	6
Applicable Robotic Hand Changer Model No.	**STR0250-M□□□-□**

1. Material : A2017BE-T4
   Surface Finishing : Anodized Aluminum Finishing (Red)

※1. It shows the weight of an adapter plate only.
Bolts and pins are not included.

※2. There are various hole depths and thread depths for a robot. Make sure to check the external dimensions to avoid interference before use.

Attachable External Option：Electrode

External Option		Model No.
D-sub Connector	P.41	**STRZ0D0-M**
Power Transmission	P.45	**STRZ0E0-M**
Servo Electrode	P.47	**STRZ0F0-M**
Circular Connector	P.42	**STRZ0G0-M**
High Current Transmission	P.46	**STRZ0H0-M**
Resin Connector	P.31	**SWLZ0J0-M**
Ethernet Electrode	P.53	**STRZ0L0-M**
Waterproof Electrode IP67	P.51	**SWLZ0V0-M**
Compact Waterproof Electrode IP67	P.49	**SWLZ0W0-M**

Attachable External Option：Air Joint

External Option		Model No.
4 Ports		**SWLZ0P0-M**
	P.57	**SWLZ0PZ90-M**
2 Ports	P.56	**STRZ0Q0-M**
3 Ports	P.55	**SWLZ0R0-M**

Accessories Sold Separately

External Options for STR Electrical Connection / Air Ports

A wide variety of electrodes can connect various signals such as control signals and power signals.
Additional air joints are also available for extra air ports.

Installation Examples of Electrode and Air Joint

Electrode + Electrode

Electrode + Air Joint

For several options : Able to mount 2 options together.

Electrical connectors are sold separately. Please mount on applicable mounting surfaces shown below.

Model No.	**STR0250**
Option Mounting Surface	Option Mounting Surface : 2 parts 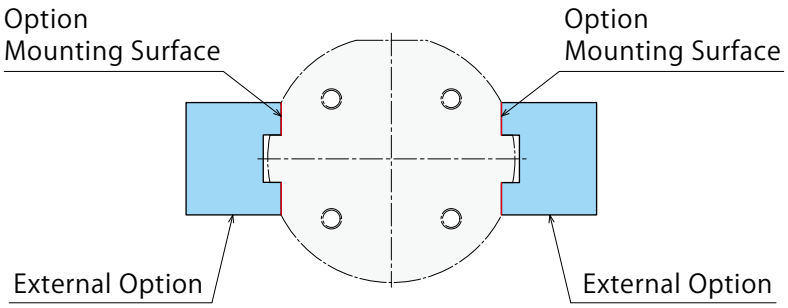

This mark means :
Able to mount two options together.
※ Refer to P.59 for further information.

DC24V

Resin Connector

Solder Terminal

Solder Terminal
with Cable

Simple Waterproof Electrode
Only when connected：IP54

D-sub Connector

Circular Connector

AC / DC200V

Compact Electric Power Transmission Option
5A 4 Poles
(Total Current Capacity 12A)

Power Transmission Option
5A 8 Poles
(Total Current Capacity 24A)

High Current Transmission Option
13A 10 Poles
(Total Current Capacity 57A)

AC / DC240V ＋ DC24V Servo Electrode

Servo Electrode
20A 6 Poles for Power Supply + 17 Poles for Signal

Noncontact Waterproof Electrode (IP67)

Noncontact Waterproof Electrode Compact Model
Number of Signals : 4

Noncontact Waterproof Electrode
Number of Signals : 12

Ethernet Electrode

Ethernet Electrode
Transmission Speed：100Mbps
Connector：M12 D-code 4 Poles

Air Joint (For Extra Air Ports)

3 Ports
Equal to φ6 x 1 Port
Equal to φ2 x 2 Ports

4 Ports
Equal to φ2 x 4 Ports

2 Ports
Equal to φ4 x 2 Ports

Model No. Indication

SWL Z0 J 0 - M

Shared with SWL

2 M：for Master Cylinder / T：for Tool Adapter and Cable Length

1 External Option Symbol

• Electrode

Rated Voltage	Rated Current	External Options (Detail Page)		Number of Poles		Model No. Master Cylinder	Model No. Tool Adapter
DC24V	※1 2A/1A	Resin Connector P.31		16 Poles		SWLZ0J0-M	SWLZ0J0-T
	3A ※1	Solder Terminal P.35		15 Poles		SWLZ0B0-M	SWLZ0B0-T
		Solder Terminal with Cable P.37		15 Poles	Cable 1m	SWLZ0C0-M01	SWLZ0C0-T01
					Cable 2m	SWLZ0C0-M02	SWLZ0C0-T02
					Cable 5m	SWLZ0C0-M05	SWLZ0C0-T05
		Simple Waterproof Electrode Only when connected：IP54 P.39		16 Poles	Cable 1m	SWLZ0U0-M01	SWLZ0U0-T01
					Cable 2m	SWLZ0U0-M02	SWLZ0U0-T02
					Cable 5m	SWLZ0U0-M05	SWLZ0U0-T05
AC200V DC200V	5A ※1	Compact Electric Power Transmission Option P.43		4 Poles		SWLZ0K0-M	SWLZ0K0-T
Noncontact Waterproof Electrode IP67 Compact Model P.49				Number of Signals : 4	NPN	SWLZ0W0-M	SWLZ0W0-T For both NPN and PNP
					PNP	SWLZ0WX0-M	
Noncontact Waterproof Electrode IP67 P.51				Number of Signals : 12	NPN Cable 2m	SWLZ0V0-M	SWLZ0V0-T Cable 1m For both NPN and PNP
					NPN Cable 5m	SWLZ0V0-M05	
					PNP Cable 2m	SWLZ0VX0-M	
					PNP Cable 5m	SWLZ0VX0-M05	

Note :

※1. For the electrode options, check the total current capacity and contact resistance shown in the specifications of each option.

• Air Joint

No. of Ports (Min. Passage Area)	External Options (Detail Page)		Model No. Master Cylinder	Model No. Tool Adapter
3 Ports (Equal to φ6×1 port Equal to φ2×2 ports)	Air Joint P.55		SWLZ0R0-M	SWLZ0R0-T
4 Ports (Equal to φ2)	Air Joint (Air Port Position Side : 2, Bottom : 2) P.57		SWLZ0P0-M	SWLZ0P0-T
	Air Joint (Air Port Position Bottom : 4) P.58		SWLZ0PZ90-M	SWLZ0PZ90-T

Model No. Indication

STR Z0 D 0 - M

- STR: with Exclusive Bracket for STR
- D: 1 External Option Symbol
- M: 2 M：for Master Cylinder / T：for Tool Adapter and Cable Length

• Electrode

Rated Voltage	Rated Current	External Options (Detail Page)	Number of Poles		Model No. Master Cylinder	Model No. Tool Adapter
DC24V	3A ※1	D-sub Connector P.41	15 Poles		STRZ0D0-M	STRZ0D0-T
		Circular Connector (Connector Based on JIS C 5432) P.42	15 Poles		STRZ0G0-M	STRZ0G0-T
AC200V DC200V	5A ※1	Power Transmission Option (Connector Based on MIL-DTL-5015) P.45	8 Poles		STRZ0E0-M	STRZ0E0-T
	13A ※1	High Current Transmission Option (Connector Based on MIL-DTL-5015) P.46	10 Poles		STRZ0H0-M	STRZ0H0-T
for Power AC/DC240V for Signal DC24V	for Power 20A for Signal 3A	Servo Electrode P.47	6 Poles for Power Supply 17 Poles for Signal + 1 Pole for Functional Ground	Cable 1m	STRZ0F0-M01	STRZ0F0-T01
				Cable 2m	STRZ0F0-M02	STRZ0F0-T02
				Cable 5m	STRZ0F0-M05	STRZ0F0-T05
Ethernet Electrode P.53			–		STRZ0L0-M	STRZ0L0-T

Note :

※1. For the electrode options, check the total current capacity and contact resistance shown in the specifications of each option.

• Air Joint

No. of Ports (Min. Passage Area)	External Options (Detail Page)	Model No. Master Cylinder	Model No. Tool Adapter
2 Ports (Equal to $\phi 4$)	Air Joint P.56	STRZ0Q0-M	STRZ0Q0-T

External Option：Resin Connector

Able to add an external option.
Refer to P.59 for details.

External Option Symbol：J

Model No. for Master Cylinder Side
model **SWLZ0J0-M**

Model No. for Tool Adapter Side
model **SWLZ0J0-T**

Specifications

Rated Value (per contact)		DC 24V 2A：Pin 1,3,5,7,9,11,13,15 1A：Pin 2,4,6,8,10,12,14,16
Resin Connector		DF11-16DP-2DS(52) (HIROSE ELECTRIC)
Contact Resistance (Initial Value)		30mΩ or less
Total Current Capacity		10A
Number of Poles (per electrode)		16
Connector Pin Coating		Gold Coating
Weight※1	Master Cylinder Side	13g
	Tool Adapter Side	11g
Cable with Applicable Connector (Sold Separately)		SWZ0J0-CL□ (Refer to P.32)

※1. Weight per kit.

External Dimensions

Master Cylinder Side

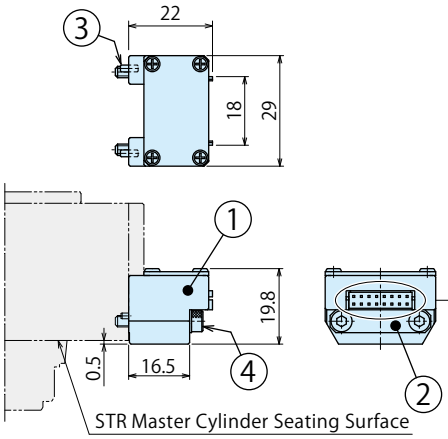

Model No.	No.	Name	Quantity
SWLZ0J0-M	①	Electrode (Master Side)	1
	②	Spacer	1
	③	Parallel Pin ϕ1.5×4 B Type (SUS)	2
	④	Hexagon Socket Bolt M3×0.5×20 (SUS)	2

Pin Number

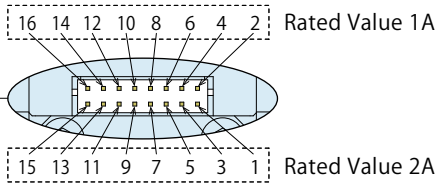

Tool Adapter Side

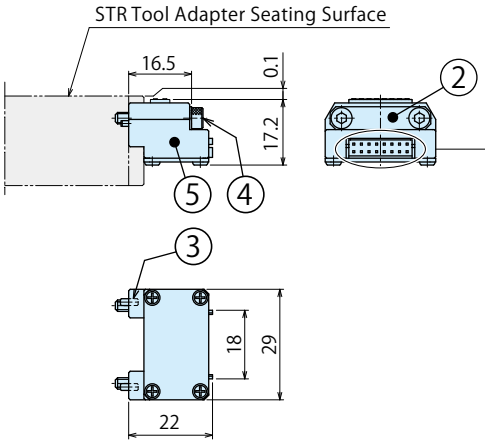

Pin Number

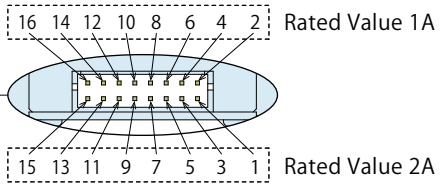

Model No.	No.	Name	Quantity
SWLZ0J0-T	⑤	Electrode (Tool Side)	1
	②	Spacer	1
	③	Parallel Pin ϕ1.5×4 B Type (SUS)	2
	④	Hexagon Socket Bolt M3×0.5×20 (SUS)	2

Notes on Wire/Cable Procedure and Wiring

- Make sure to fix the wire and cable so that they are not pulled while a robot is moving or turning around. External force should not be applied on the connector part since it leads to breaking of wire, detaching of connector and contact failure.

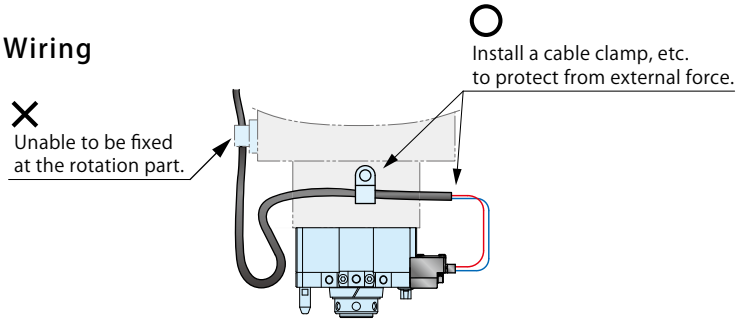

Connecting Cable

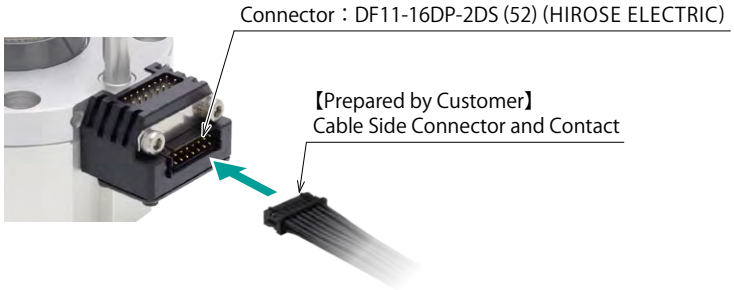

The cable side (connecter, contact, cable) is not included.
Please prepare the cable with applicable connector (SWZ0J0-CL□), or design them yourself referring to the following list.

Cable Side Connector Model No.	Cable Side Contact Model No.	Recommended Wire Size	Protective Tool: Manual Crimping Tool	Protective Tool: Contact Removal Tool	Maker
DF11-16DS-2C	DF11-22SCA	AWG22	DF11-TA22HC	DF-C-PO(B)	HIROSE ELECTRIC
	DF11-2428SCA	AWG24 ～ 28	DF11-TA2428HC		

Notes： 1. Refer to HIROSE ELECTRIC catalogs for the detailed specifications and the rated current based on wire size.
2. The model number of connector required for the master cylinder and the tool adapter is the same.

External Option：Cable with Connector for Resin Connector

This cable is an optional cable applicable to the Resin Connector Electrode (SWLZ0J0-M/T External Option Symbol：**J**).

Model No. Indication

SWZ0J0-C L1 / L2 / L5

Cable Length
L1：1m
L2：2m
L5：5m

Design No.
(Revision Number)

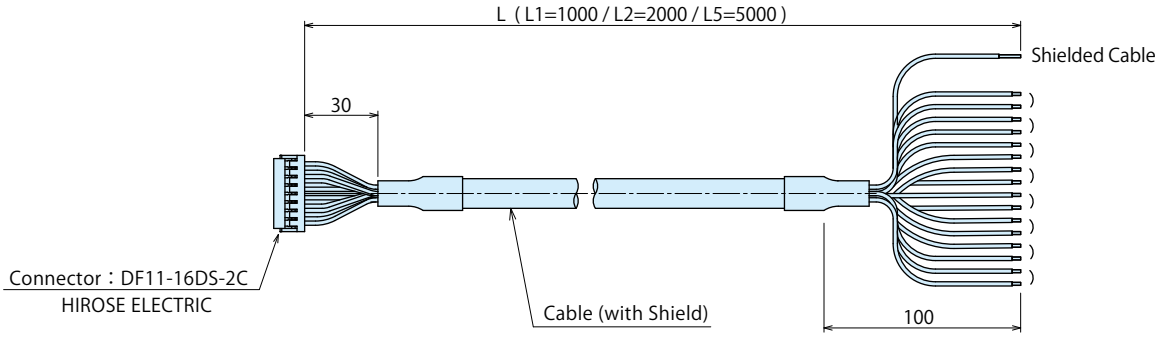

Pin Numbers and Wire Colors

HIFLON SD-SB/20276 Black AWG24X8P (with Shield)

NISSEI ELECTRIC
Conductor Cross-Sectional Area：0.2mm² (AWG24)
Number of Cores：16
Weight：76g /m (Weight per meter)

Outer Diameter ϕ7.1

Rated Current	2A								1A							
Pin Number	1	3	5	7	9	11	13	15	2	4	6	8	10	12	14	16
Wire Color	Black	White	Red	Green	Yellow	Brown	Blue	Orange	Gray	Violet	Light Blue	Pink	White/ Black	White/ Red	White/ Blue	Yellow/ Black
	Twisted Pair		Twisted Pair		Twisted Pair		Twisted Pair		Twisted Pair		Twisted Pair		Twisted Pair		Twisted Pair	

External Option：Cable with M8 Connector for Resin Connector

This cable is an optional cable applicable to the Resin Connector Electrode (**SWLZ0J0**).

Model No. Indication

SWZ0J0 – M8 P/S – CL02/CL03

Design No.
(Revision Number)

M8 Connector Category
P：Plug
S：Socket

※ The appearance of connector is subject to change.

P：Plug

S：Socket

Cable Length
CL02：0.2m
CL03：0.3m (Only available in case of S：Socket.)

Specifications

Rated Value	DC24V 1.5A
Connector Spec. (M8 Connector Side)	M8 Code A 8 cores (Based on IEC61076-2-104)
Weight	SWZ0J0-M8P-CL02：14g SWZ0J0-M8S-CL02：14g SWZ0J0-M8S-CL03：16g

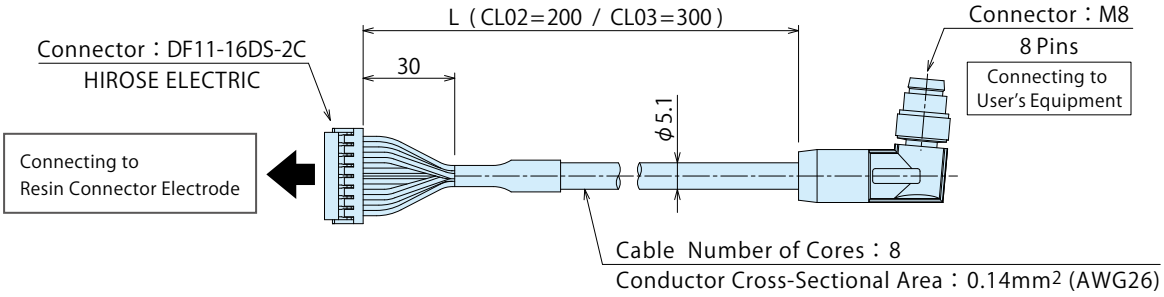

Pin Number and Wire Color

Pin Number DF11 Connector Side	Wire Color	Pin Number M8 Connector Side
1	White	1
3	Brown	2
5	Green	3
7	Yellow	4
9	Gray	5
11	Pink	6
13	Blue	7
15	Red	8

(Pin Number 2,4,6,8,10,12,14,16 Not Connected)

Pin Assignment **M8 Code A**

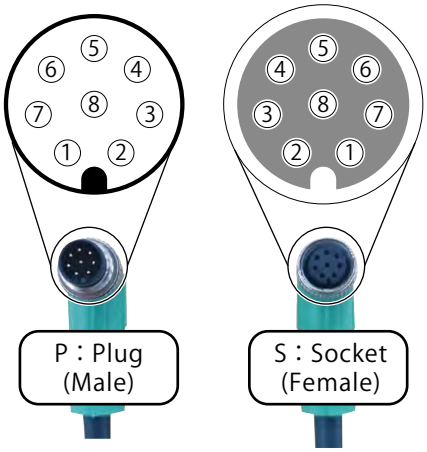

Notes on Wire/Cable Procedure and Wiring

- Make sure to fix the wire and cable so that they are not pulled while a robot is moving or turning around. External force should not be applied on the connector part since it leads to breaking of wire, detaching of connector and contact failure.

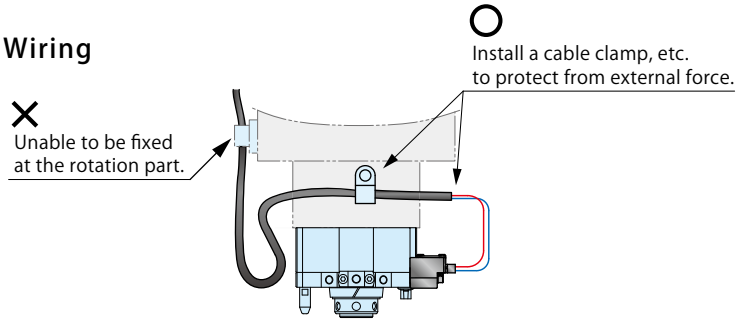

MEMO

External Option：Solder Terminal

Able to add an external option.
Refer to P.59 for details.

External Option Symbol：**B**

Model No. for Master Cylinder Side
model **SWLZ0B0-M**

Model No. for Tool Adapter Side
model **SWLZ0B0-T**

Specifications

Rated Value (per contact)		DC 24V 3A
Contact Resistance (Initial Value)		100mΩ or less
Total Current Capacity		10A
Number of Poles (per electrode)		15
Weight ※1	Master Cylinder Side	19g
	Tool Adapter Side	15g

※1. Weight per kit

External Dimensions：Electrode

Master Cylinder Side | Tool Adapter Side

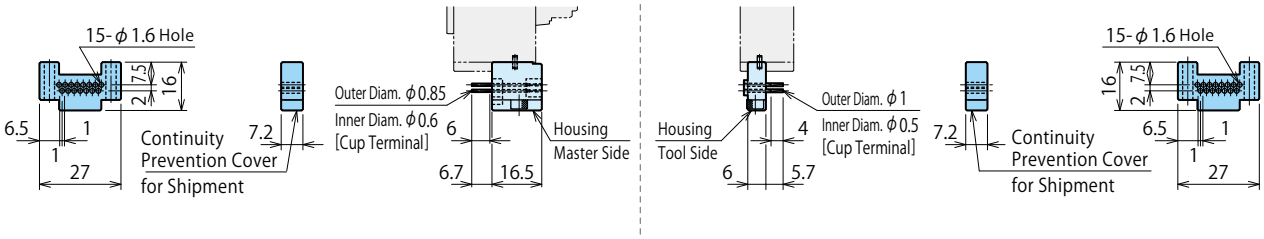

Connection Method for Solder Terminal

For solder terminal option, the electric signal pin, wire and cable of both master cylinder and tool adapter are connected with soldering. If required, insulate them with a thermal contraction tube etc.
（Remove the continuity prevention cover before soldering.）

Soldering condition should be：280℃, within 3 seconds.
Make sure the outer diameter is φ1.6mm after soldering.

【Recommended Wire Diameter】
Use wires with AWG26 size or smaller diameter. If you need electric current more than allowable flowing current of AWG26, use wires within the rated value of electrode. At this time, soldering hole cannot be used.

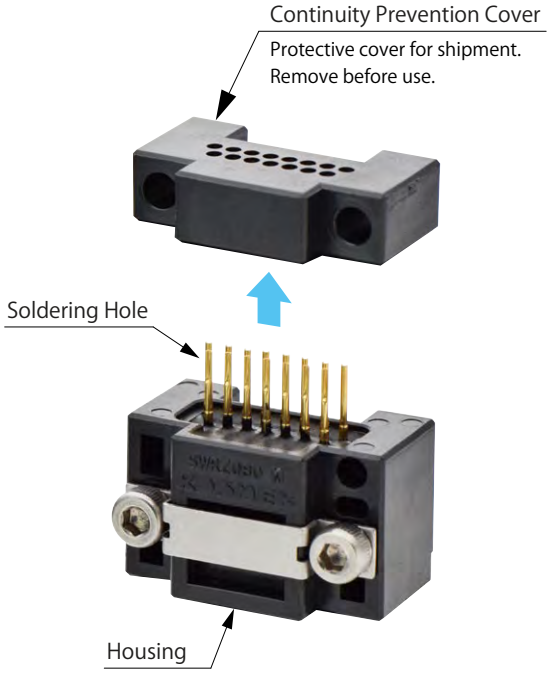

External Dimensions

Master Cylinder Side

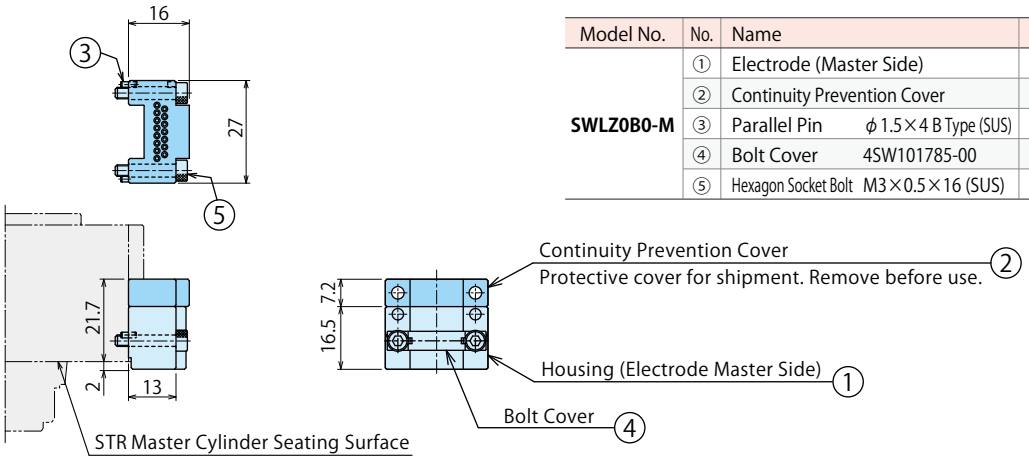

Model No.	No.	Name	Quantity
SWLZ0B0-M	①	Electrode (Master Side)	1
	②	Continuity Prevention Cover	1
	③	Parallel Pin ϕ1.5×4 B Type (SUS)	2
	④	Bolt Cover 4SW101785-00	1
	⑤	Hexagon Socket Bolt M3×0.5×16 (SUS)	2

Tool Adapter Side

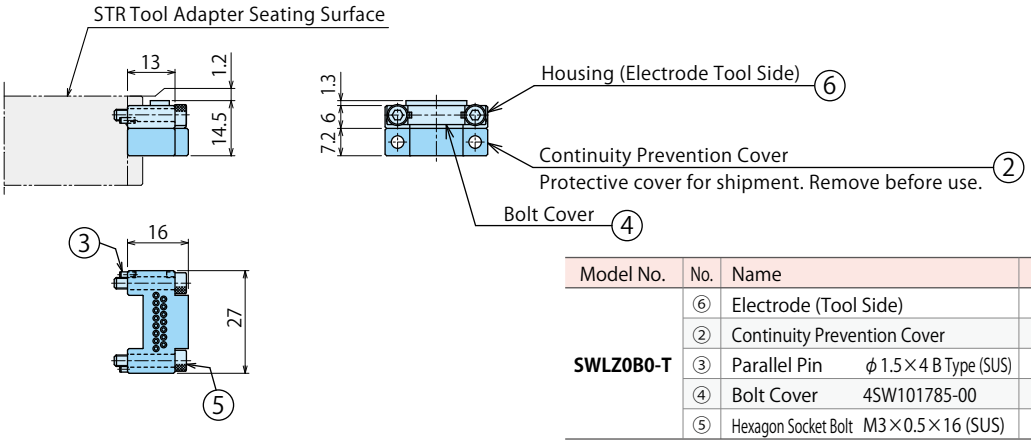

Model No.	No.	Name	Quantity
SWLZ0B0-T	⑥	Electrode (Tool Side)	1
	②	Continuity Prevention Cover	1
	③	Parallel Pin ϕ1.5×4 B Type (SUS)	2
	④	Bolt Cover 4SW101785-00	1
	⑤	Hexagon Socket Bolt M3×0.5×16 (SUS)	2

External Option：Solder Terminal with Cable

Able to add an external option. Refer to P.59 for details.

External Option Symbol：**C**

Model No. for Master Cylinder Side

model **SWLZ0C0-** **M01 M02 M05**

Model No. for Tool Adapter Side

model **SWLZ0C0-** **T01 T02 T05**

Specifications

Rated Value (per contact)			DC 24V 3A
Contact Resistance (Initial Value)			100mΩ or less
Total Current Capacity			10A
Number of Poles (per electrode)			15
Lead Wire Size			Refer to the table below
Lead Wire Length	−M01/T01		1m
	−M02/T02		2m
	−M05/T05		5m
Weight※1	Master Cylinder Side	-M01	Electrode 20g + Cable 80g
		-M02	Electrode 20g + Cable 160g
		-M05	Electrode 20g + Cable 400g
	Tool Adapter Side	-T01	Electrode 15g + Cable 80g
		-T02	Electrode 15g + Cable 160g
		-T05	Electrode 15g + Cable 400g

※1. Weight per kit.

Pin Numbers and Wire Colors

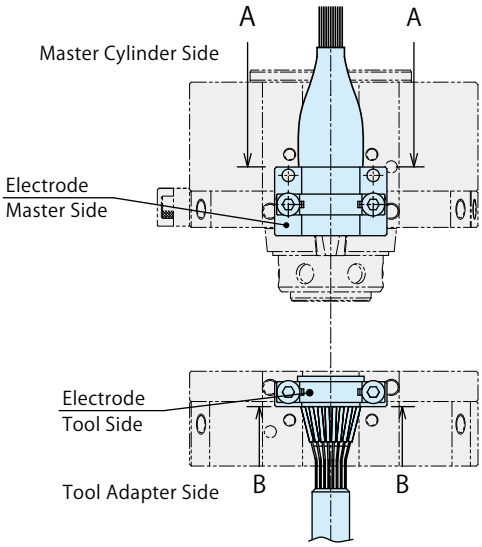

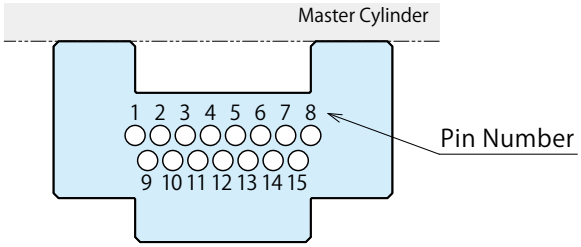

View A-A

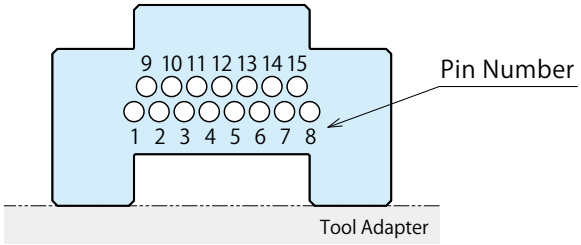

View B-B

Cable

HIFLON SD-SB/20276 Black AWG24X8P (with Shield)

NISSEI ELECTRIC Weight：76g /m (Weight per meter)
Conductor Cross-Sectional Area：0.2mm² (AWG24)
Number of Cores：16

Outer Diameter ϕ7.1

Pin Number	1	2	3	4	5	6	7	8	9	10	11	12	13	14	15	Not Used
Wire Color	Black	White	Red	Green	Yellow	Brown	Blue	Orange	Gray	Violet	Light Blue	Pink	White/ Black	White/ Red	White/ Blue	Yellow/ Black
	Twisted Pair		Twisted Pair		Twisted Pair		Twisted Pair		Twisted Pair		Twisted Pair		Twisted Pair		Twisted Pair	

External Dimensions

Master Cylinder Side

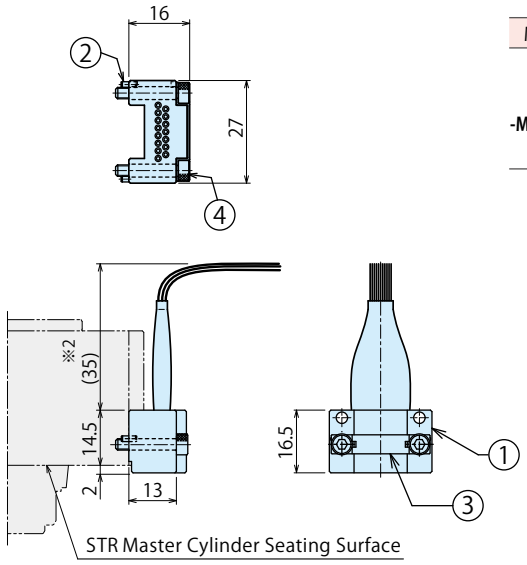

Model No.	No.	Name	Quantity
SWLZ0C0 -M01/M02/M05	①	Electrode (Master Side)	1
	②	Parallel Pin φ1.5×4 B Type (SUS)	2
	③	Bolt Cover 4SW101785-00	1
	④	Hexagon Socket Bolt M3×0.5×16 (SUS)	2

Tool Adapter Side

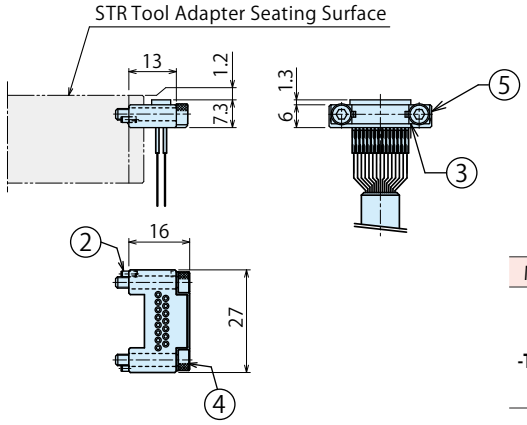

Model No.	No.	Name	Quantity
SWLZ0C0 -T01/T02/T05	⑤	Electrode (Tool Side)	1
	②	Parallel Pin φ1.5×4 B Type (SUS)	2
	③	Bolt Cover 4SW101785-00	1
	④	Hexagon Socket Bolt M3×0.5×16 (SUS)	2

Notes :

※2. For some robots, cables may interfere with robot housing. Make sure there is no interference before use.

1. The connected part of the solder terminal and lead wire is isolated with a thermal contraction tube.
2. For SWLZ0C0-□01/02/05 the lead wire length is different from its shown in the specifications.
   (SWLZ0C0-□01：Lead Wire Length 1m, SWLZ0C0-□02：Lead Wire Length 2m, SWLZ0C0-□05：Lead Wire Length 5m)

External Option：Waterproof Electrode (Simple Waterproof Option)

Able to add an external option. Refer to P.59 for details.

External Option Symbol：**U**

Model No. for Master Cylinder Side

model **SWLZ0U0-** **M01 M02 M05**

Model No. for Tool Adapter Side

model **SWLZ0U0-** **T01 T02 T05**

Specifications

Rated Value (per contact)			DC 24V 3A
Contact Resistance (Initial Value)			100mΩ or less
Total Current Capacity			10A
Number of Poles (per electrode)			16
Lead Wire Size			Refer to the table below
Lead Wire Length	−M01/ T01		1m
	−M02/ T02		2m
	−M05/ T05		5m
Weight※1	Master Cylinder Side	-M01	Electrode 35g + Cable 80g
		-M02	Electrode 35g + Cable 160g
		-M05	Electrode 35g + Cable 400g
	Tool Adapter Side	-T01	Electrode 35g + Cable 80g
		-T02	Electrode 35g + Cable 160g
		-T05	Electrode 35g + Cable 400g
Protection Grade※2			Equivalent to IP54

※1. Weight per kit.
※2. The protection grade is equivalent to IP54 at connected state (fit state) of the master cylinder and tool adapter.

Pin Numbers and Wire Colors

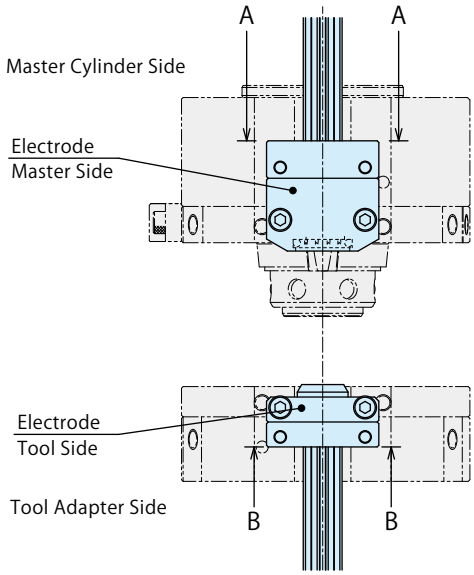

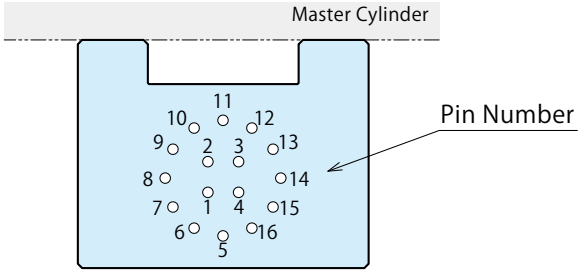

View A-A

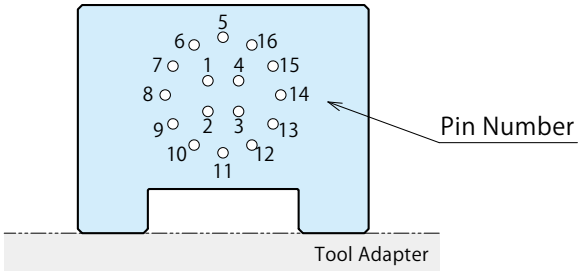

View B-B

Cable

HIFLON SD-SB/20276 Black AWG24X8P (with Shield)

NISSEI ELECTRIC Weight：76g /m (Weight per meter)
Conductor Cross-Sectional Area：0.2mm² (AWG24)
Number of Cores：16

Outer Diameter ϕ7.1

Pin Number	1	2	3	4	5	6	7	8	9	10	11	12	13	14	15	Not Used
Wire Color	Black	White	Red	Green	Yellow	Brown	Blue	Orange	Gray	Violet	Light Blue	Pink	White/ Black	White/ Red	White/ Blue	Yellow/ Black
	Twisted Pair		Twisted Pair		Twisted Pair		Twisted Pair		Twisted Pair		Twisted Pair		Twisted Pair		Twisted Pair	

External Dimensions

Master Cylinder Side

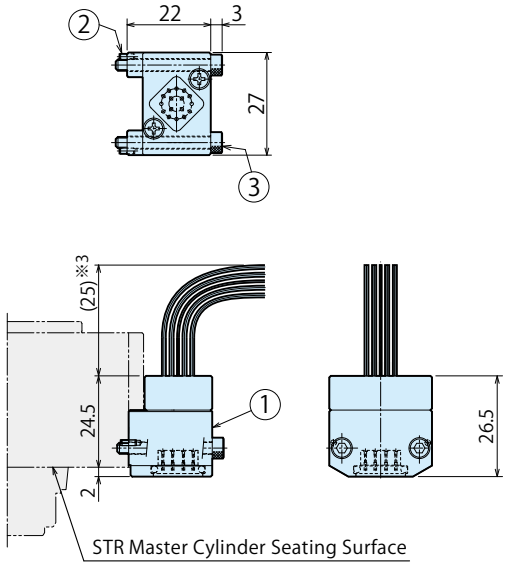

Model No.	No.	Name	Quantity
SWLZ0U0 -M01/M02/M05	①	Electrode (Master Side)	1
	②	Parallel Pin ϕ1.5×4 B Type(SUS)	2
	③	Hexagon Socket Bolt M3×0.5×25 (SUS)	2

Tool Adapter Side

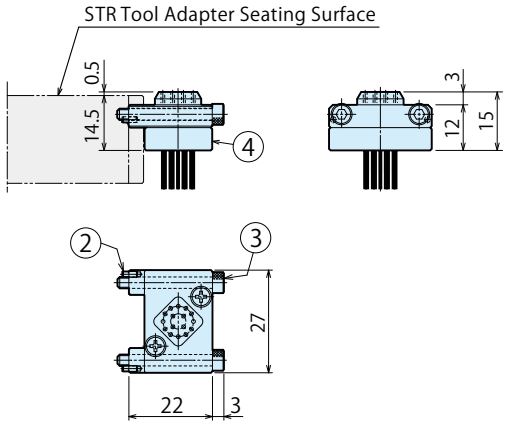

Model No.	No.	Name	Quantity
SWLZ0U0 -T01/T02/T05	④	Electrode (Tool Side)	1
	②	Parallel Pin ϕ1.5×4 B Type (SUS)	2
	③	Hexagon Socket Bolt M3×0.5×25 (SUS)	2

Notes :

※3. For some robots, cables may interfere with robot housing. Make sure there is no interference before use.

1. For SWLZ0U0-□01/02/05 the lead wire length is different from its shown in the specifications.
(SWLZ0U0-□01：Lead Wire Length 1m, SWLZ0U0-□02：Lead Wire Length 2m, SWLZ0U0-□05：Lead Wire Length 5m)

External Option：D-SUB Connector

External Option Symbol：**D**

Model No. for Master Cylinder Side
model **STRZ0D0-M**

Model No. for Tool Adapter Side
model **STRZ0D0-T**

Specifications

Rated Value (per contact)		DC 24V 3A
Contact Resistance (Initial Value)		100mΩ or less
Total Current Capacity		10A
Number of Poles (per electrode)		15
Weight※1	Master Cylinder Side	100g
	Tool Adapter Side	90g

※1. Weight per kit.

External Dimensions

Master Cylinder Side

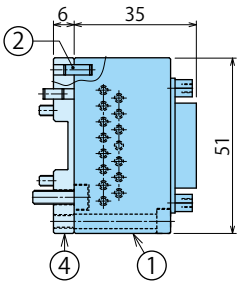

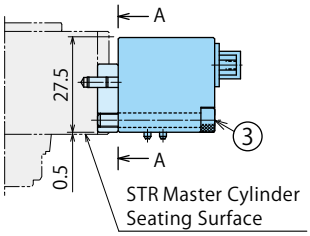

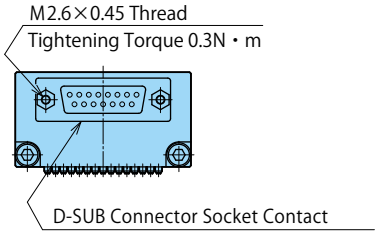

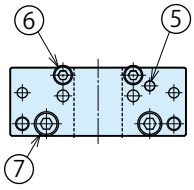

View A-A：Bracket

All-inclusive Model No.	Part No.	No.	Name	Quantity
STRZ0D0-M	SWRZ0D0-M	①	Electrode (Master Side)	1
		②	Parallel Pin φ3×8 B Type (SUS)	2
		③	Hexagon Socket Bolt M4×0.7×30 (SUS)	2
	SWRZ0Z0	④	Bracket (Common for Master/Tool Side)	1
		⑤	Parallel Pin φ3×8 B Type (SUS)	1
		⑥	Hexagon Socket Bolt M3×0.5×10 (SUS)	2
		⑦	Hexagon Socket Bolt M4×0.7×12 (SUS)	2

Tool Adapter Side

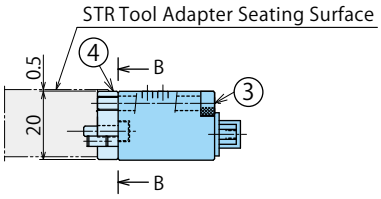

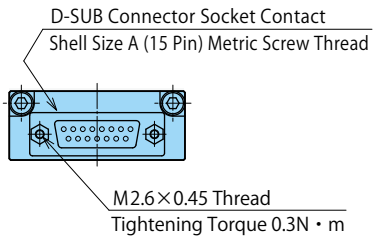

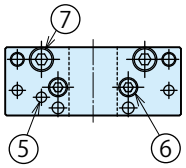

View B-B：Bracket

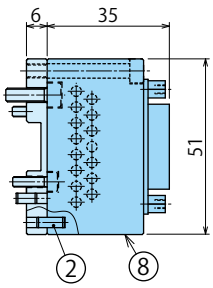

All-inclusive Model No.	Part No.	No.	Name	Quantity
STRZ0D0-T	SWRZ0D0-T	⑧	Electrode (Tool Side)	1
		②	Parallel Pin φ3×8 B Type (SUS)	2
		③	Hexagon Socket Bolt M4×0.7×30 (SUS)	2
	SWRZ0Z0	④	Bracket (Common for Master/Tool Side)	1
		⑤	Parallel Pin φ3×8 B Type (SUS)	1
		⑥	Hexagon Socket Bolt M3×0.5×10 (SUS)	2
		⑦	Hexagon Socket Bolt M4×0.7×12 (SUS)	2

External Option：Circular Connector (Connector Based on JIS C 5432)

External Option Symbol：**G**

Model No. for Master Cylinder Side
model **STRZ0G0-M**

Model No. for Tool Adapter Side
model **STRZ0G0-T**

Specifications

Rated Value (per contact)		DC 24V 3A
Contact Resistance (Initial Value)		100mΩ or less
Total Current Capacity		17A
Number of Poles (per electrode)		15
Weight※1	Master Cylinder Side	125g
	Tool Adapter Side	145g

※1. Weight per kit.

External Dimensions

Master Cylinder Side

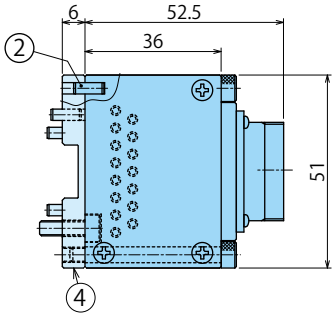

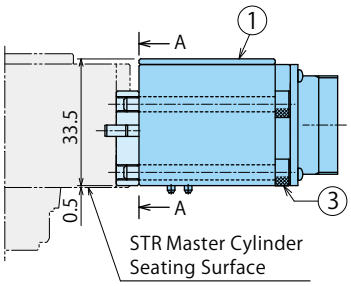

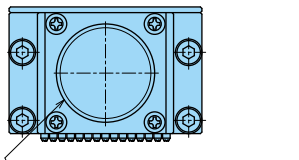

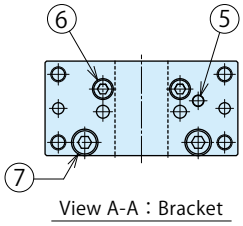

All-inclusive Model No.	Part No.	No.	Name	Quantity
STRZ0G0-M	SWRZ0G0-M	①	Electrode (Master Side)	1
		②	Parallel Pin ϕ3×8 B Type (SUS)	2
		③	Hexagon Socket Bolt M4×0.7×40 (SUS)	4
	SWRZ0E0	④	Bracket (Common for Master/Tool Side)	1
		⑤	Parallel Pin ϕ3×6 B Type (SUS)	1
		⑥	Hexagon Socket Bolt M3×0.5×10 (SUS)	2
		⑦	Hexagon Socket Bolt M4×0.7×12 (SUS)	2

Tool Adapter Side

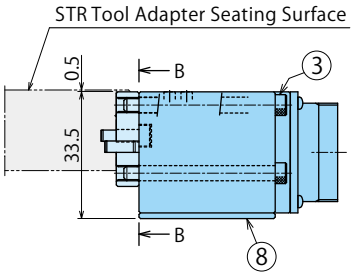

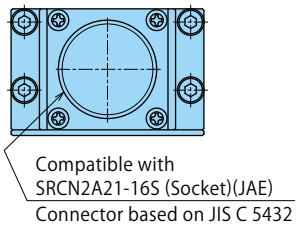

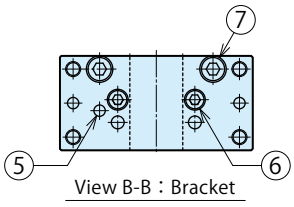

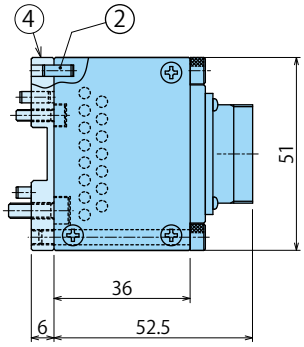

All-inclusive Model No.	Part No.	No.	Name	Quantity
STRZ0G0-T	SWRZ0G0-T	⑧	Electrode (Tool Side)	1
		②	Parallel Pin ϕ3×8 B Type (SUS)	2
		③	Hexagon Socket Bolt M4×0.7×40 (SUS)	4
	SWRZ0E0	④	Bracket (Common for Master/Tool Side)	1
		⑤	Parallel Pin ϕ3×6 B Type (SUS)	1
		⑥	Hexagon Socket Bolt M3×0.5×10 (SUS)	2
		⑦	Hexagon Socket Bolt M4×0.7×12 (SUS)	2

External Option：Compact Electric Power Transmission

Able to add an external option.
Refer to P.59 for details.

External Option Symbol：**K**

Model No. for Master Cylinder Side
model **SWLZ0K0-M**

Model No. for Tool Adapter Side
model **SWLZ0K0-T**

Specifications

Rated Value (per contact)		AC/DC 200V 5A
Total Current Capacity		12A
Number of Poles (per electrode)		4
Weight※1	Master Cylinder Side	21g
	Tool Adapter Side	17g
Cable with Applicable Terminal (Sold Separately)		SWZ0K0-CL□ (Refer to P.44)

※1. Weight per kit.

Applicable Cable

The cable with applicable terminal and applicable terminal are not included.
Please prepare the cable with applicable terminal (SWZ0K0-CL□) on P.44 or design it yourself referring to the applicable terminal on P.44.

External Dimensions

Master Cylinder Side

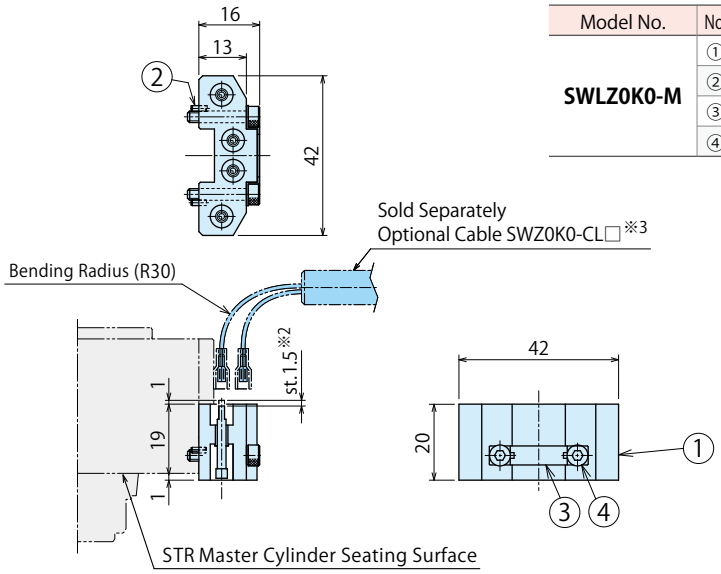

Model No.	No.	Name	Quantity
SWLZ0K0-M	①	Electrode (Master Side)	1
	②	Parallel Pin φ1.5×4 B Type (SUS)	2
	③	Bolt Cover 4SW101785-00	1
	④	Hexagon Socket Bolt M3×0.5×16 (SUS)	2

Tool Adapter Side

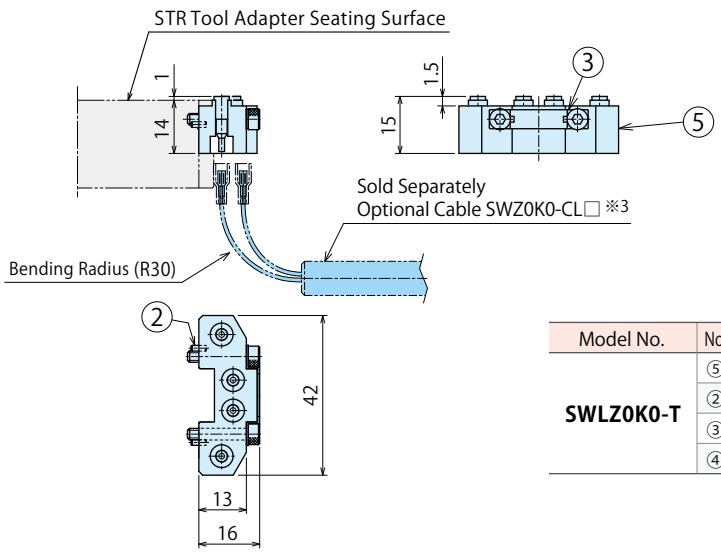

Model No.	No.	Name	Quantity
SWLZ0K0-T	⑤	Electrode (Tool Side)	1
	②	Parallel Pin φ1.5×4 B Type (SUS)	2
	③	Bolt Cover 4SW101785-00	1
	④	Hexagon Socket Bolt M3×0.5×16 (SUS)	2

Notes :

※2. The electrode probe on master side strokes 1.5mm (※2) when connecting with STR.
When fixing the cable, make sure there is enough space for the probe operation.

※3. The optional cable and terminal are not included in the electrode. Please prepare them separately.

Notes on Wire/Cable Procedure and Wiring

- Make sure to fix the wire and cable so that they are not pulled while a robot is moving or turning around.
  External force should not be applied on the connector part since it leads to breaking of wire, detaching of connector and contact failure.
  However, the electrode probe on master side strokes 1.5mm when connecting with STR. When fixing the cable, make sure there is enough space for the probe to stroke.

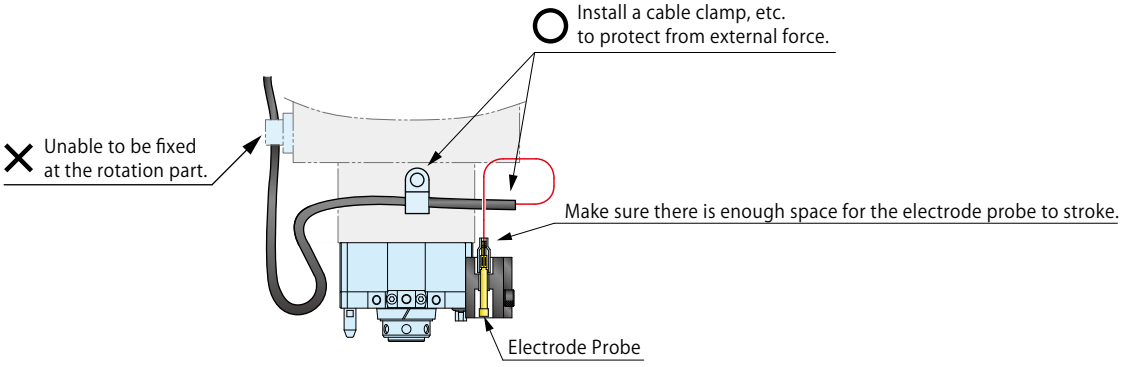

- As for Compact Electric Power Transmission option, the electrode probes on both master cylinder and tool adaptor are exchangeable.
  The electrode probes will be fallen out if pushed from the cable connecting side with power stronger than a certain level.
  In case the electrode probes are pushed out after connecting the cable, make sure to push them back from the seating surface side before use.

External Option：Cable with Terminal for Compact Electric Power Transmission

This cable is an optional cable applicable to the Compact Electric Power Transmission SWLZ0K0-M/T(External Option Symbol：K).

Model No. Indication

SWZ0K0-C L1 / L2 / L5

Cable Length
L1：1m
L2：2m
L5：5m

Design No.
(Revision Number)

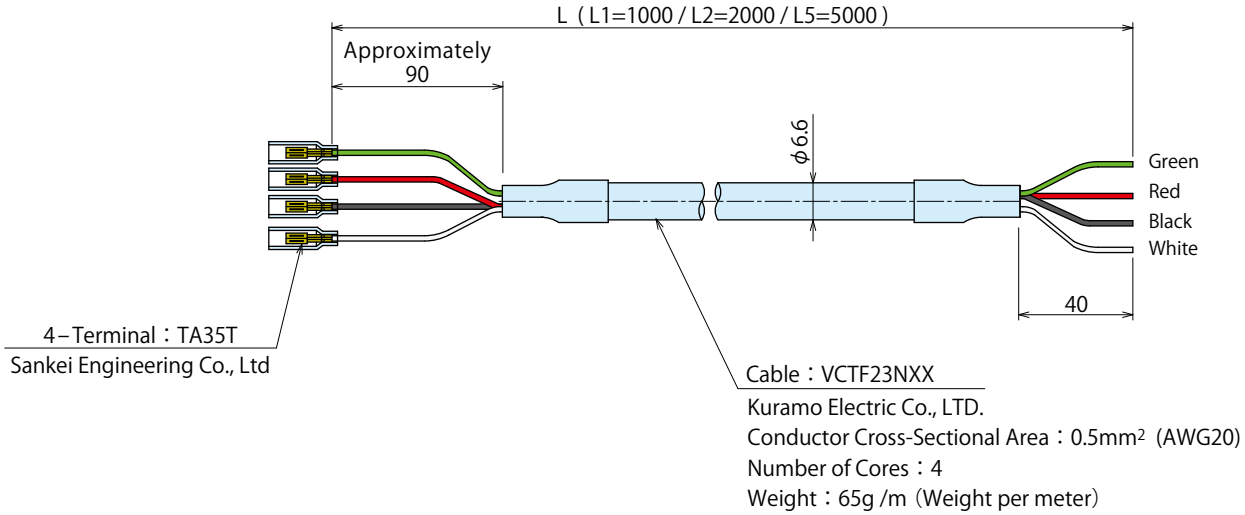

※A crimp tool for crimping the applicable terminal (TA35T) is required when preparing a cable by yourself referring to this drawing.

External Option：Power Transmission Option (Connector Based on MIL-DTL-5015)

External Option Symbol：**E**

Model No. for Master Cylinder Side
model **STRZ0E0-M**

Model No. for Tool Adapter Side
model **STRZ0E0-T**

Specifications

Rated Value (per contact)		AC/DC 200V 5A
Total Current Capacity		24A
Number of Poles (per electrode)		8
Weight※1	Master Cylinder Side	165g
	Tool Adapter Side	175g

※1. Weight per kit.

External Dimensions

Master Cylinder Side

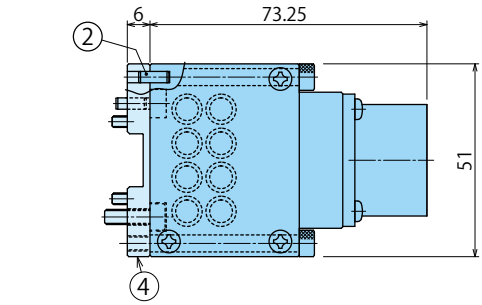

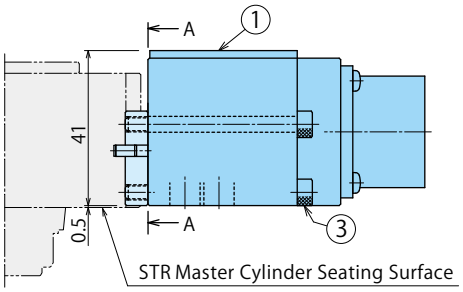

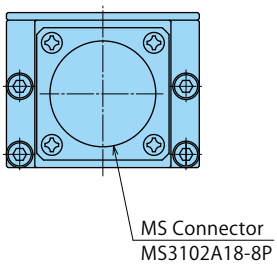

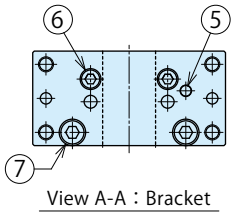

All-inclusive Model No.	Part No.	No.	Name	Quantity
STRZ0E0-M	SWRZ0E0-M	①	Electrode (Master Side)	1
		②	Parallel Pin φ3×8 B Type (SUS)	2
		③	Hexagon Socket Bolt M4×0.7×45 (SUS)	4
	SWRZ0E0	④	Bracket (Common for Master/Tool Side)	1
		⑤	Parallel Pin φ3×6 B Type (SUS)	1
		⑥	Hexagon Socket Bolt M3×0.5×10 (SUS)	2
		⑦	Hexagon Socket Bolt M4×0.7×12 (SUS)	2

Tool Adapter Side

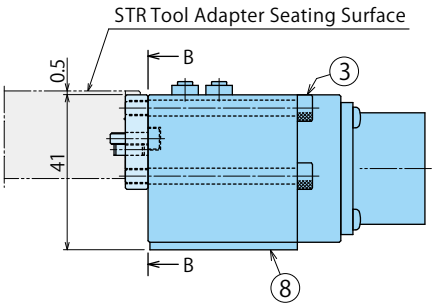

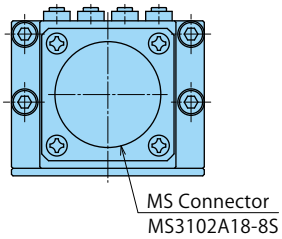

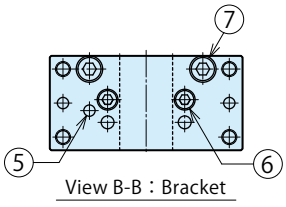

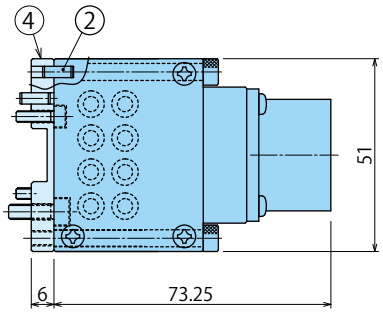

All-inclusive Model No.	Part No.	No.	Name	Quantity
STRZ0E0-T	SWRZ0E0-T	⑧	Electrode (Tool Side)	1
		②	Parallel Pin φ3×8 B Type (SUS)	2
		③	Hexagon Socket Bolt M4×0.7×45 (SUS)	4
	SWRZ0E0	④	Bracket (Common for Master/Tool Side)	1
		⑤	Parallel Pin φ3×6 B Type (SUS)	1
		⑥	Hexagon Socket Bolt M3×0.5×10 (SUS)	2
		⑦	Hexagon Socket Bolt M4×0.7×12 (SUS)	2

External Option：High Current Transmission Option (Connector Based on MIL-DTL-5015)

External Option Symbol：**H**

Model No. for Master Cylinder Side
model **STRZ0H0-M**

Model No. for Tool Adapter Side
model **STRZ0H0-T**

Specifications

Rated Value (per contact)		AC/DC 200V 13A
Total Current Capacity		57A
Number of Poles (per electrode)		10
Weight※1	Master Cylinder Side	310g
	Tool Adapter Side	240g

※1. Weight per kit.

External Dimensions

Master Cylinder Side

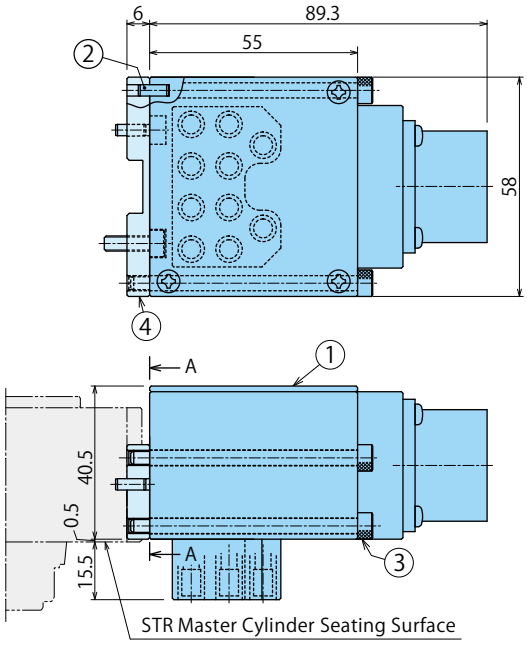

All-inclusive Model No.	Part No.	No.	Name	Quantity
STRZ0H0-M	SWRZ0H0-M	①	Electrode (Master Side)	1
		②	Parallel Pin ϕ3×8 B Type (SUS)	2
		③	Hexagon Socket Bolt M4×0.7×60 (SUS)	4
	SWRZ0H0	④	Bracket (Common for Master/Tool Side)	1
		⑤	Parallel Pin ϕ3×6 B Type (SUS)	1
		⑥	Hexagon Socket Bolt M3×0.5×10 (SUS)	2
		⑦	Hexagon Socket Bolt M4×0.7×12 (SUS)	2

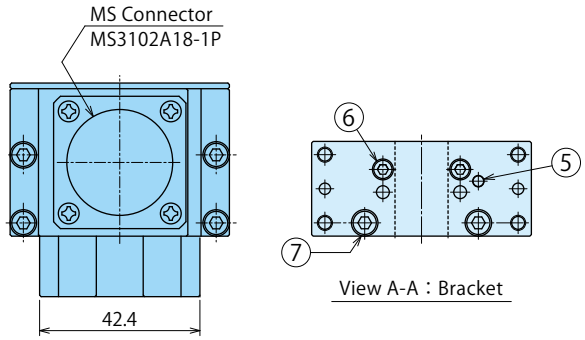

Tool Adapter Side

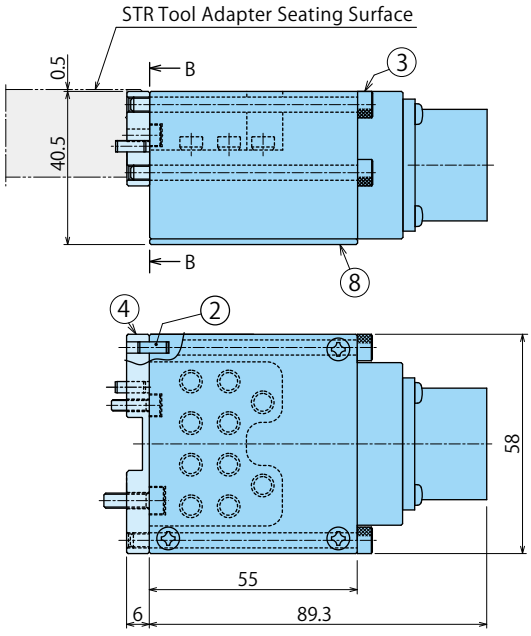

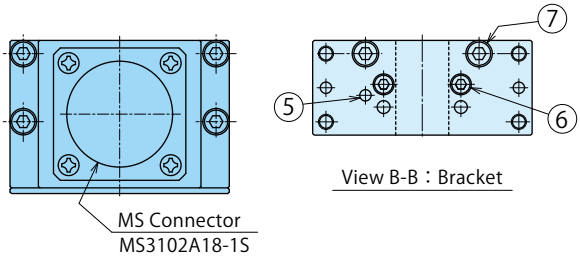

All-inclusive Model No.	Part No.	No.	Name	Quantity
STRZ0H0-T	SWRZ0H0-T	①	Electrode (Tool Side)	1
		②	Parallel Pin ϕ3×8 B Type (SUS)	2
		③	Hexagon Socket Bolt M4×0.7×60 (SUS)	4
	SWRZ0H0	④	Bracket (Common for Master/Tool Side)	1
		⑤	Parallel Pin ϕ3×6 B Type (SUS)	1
		⑥	Hexagon Socket Bolt M3×0.5×10 (SUS)	2
		⑦	Hexagon Socket Bolt M4×0.7×12 (SUS)	2

External Option：Servo Electrode

External Option Symbol：**F**

Model No. for Master Cylinder Side

model **STRZ0F0-** **M01** **M02** **M05**

Model No. for Tool Adapter Side

model **STRZ0F0-** **T01** **T02** **T05**

Specifications

Contact A for Power Supply			
	Rated Value (per contact)		AC / DC 240V 20A ※1 ※2
	Number of Poles (per electrode)		6
Contact B for Signal			
	Rated Value (per contact)		DC 24V 3A
	Number of Poles (per electrode)		17 (for Signal) + 1 (for Functional Ground)
	Total Current Capacity		10A
Cable Specifications			Refer to the following table.
Lead Wire Length	– **M01/ T01**		1m
	– **M02/ T02**		2m
	– **M05/ T05**		5m
Weight ※3	Master Cylinder Side	– **M01**	Electrode 510g + Cable 280g
		– **M02**	Electrode 510g + Cable 560g
		– **M05**	Electrode 510g + Cable 1400g
	Tool Adapter Side	– **T01**	Electrode 470g + Cable 280g
		– **T02**	Electrode 470g + Cable 560g
		– **T05**	Electrode 470g + Cable 1400g

※1. Depending on the operating environment of a customer, the cable for power supply may become hot. Refer to the following conditions, and check if the maximum temperature in the operating environment combined with the temperature rise is safe before using the product.
- After 5 minutes of use with all 6 poles at 50% usage rate of 20A (5 sec. ON/ 5 sec. OFF), the cable temperature rise is Δt= about 20℃.
- After 5 minutes of use with all 6 poles at 100% usage rate of 20A and continuous current, the cable temperature rise is Δt=about 40℃.

※2. When supplying power for more than 5 minutes, reduce the current per electrode to suppress the temperature rise.
- Example 1. Using multiple electrodes can reduce the current per pole.
- Example 2. Suppress the surface temperature of cable coating installed in areas easily touched by people to below 60℃.

※3. Weight per kit.

Pin Numbers and Wire Colors

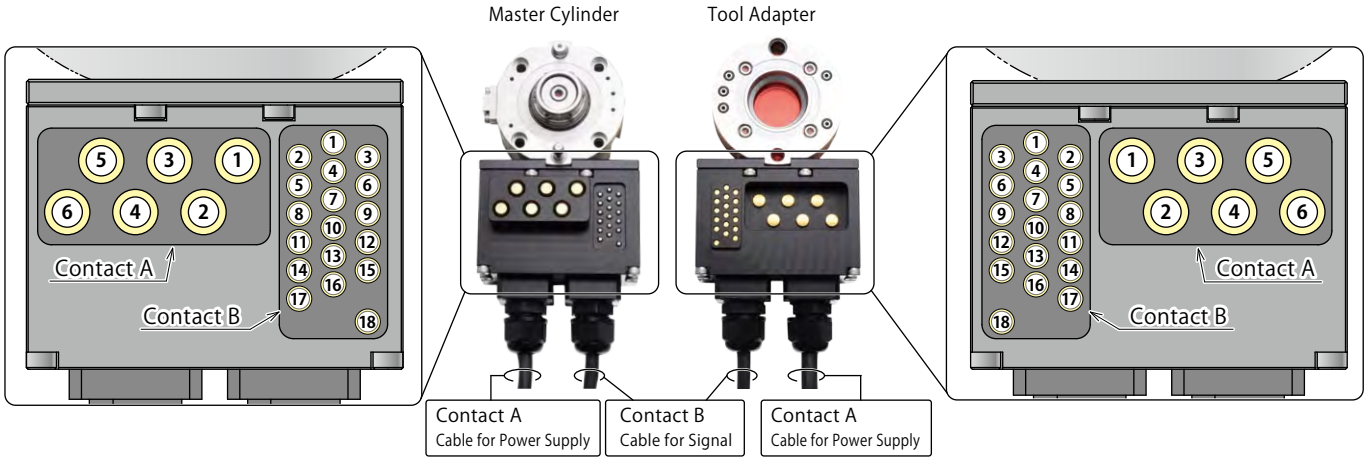

Contact A Cable for Power Supply

HIFLON SD/2586 6C×15AWG Black

NISSEI ELECTRIC
Conductor Cross-Sectional Area：2.0 mm² (AWG15)
Number of Cores：6
Cable Rated Value Temp：105℃ Voltage：600V

Weight：188g /m (Weight per meter)

Pin Number	1	2	3	4	5	6
Wire Color	Brown	Yellow	Green	Red	White	Black

Contact B Cable for Signal

HIFLON SD-SB/20276 10P×23AWG Black (with Shield)

NISSEI ELECTRIC
Conductor Cross-Sectional Area：0.3mm² (AWG23)
Cable Rated Value Temp：80℃ Voltage：30V

Weight：119g /m (Weight per meter)
Number of Cores：20

Pin Number	1	2	3	4	5	6	7	8	9	10	11	12	13	14	15	16	17	18(FG)	Not Used	Not Used
Wire Color	Yellow/ Blue	Yellow/ Red	Yellow/ Black	White/ Blue	White/ Red	White/ Black	Pink	Light Blue	Violet	Gray	Orange	Blue	Brown	Yellow	Green	Red	White	Black	Orange/ Black	Orange/ Black
	Twisted Pair		Twisted Pair		Twisted Pair		Twisted Pair		Twisted Pair		Twisted Pair		Twisted Pair		Twisted Pair		Twisted Pair		Twisted Pair	

External Dimensions

Master Cylinder Side

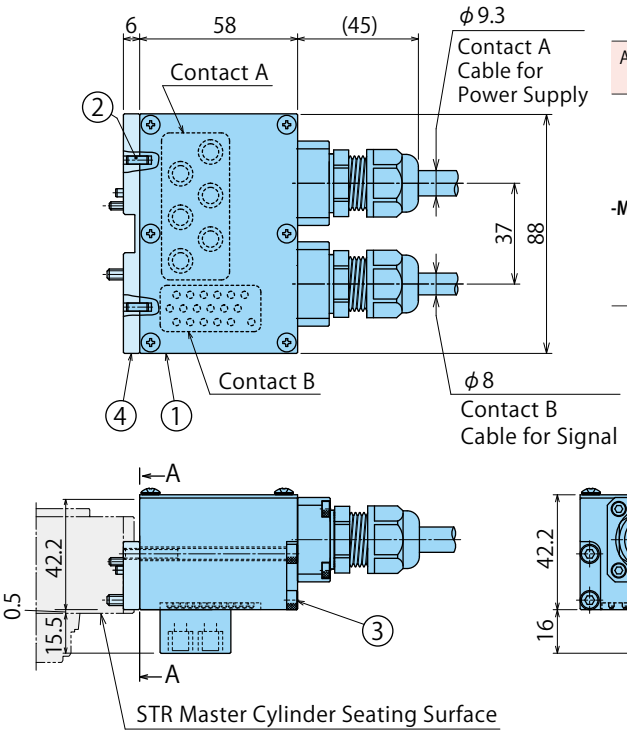

All-inclusive Model No.	Part No.	No.	Name	Quantity
STRZ0F0 -M01/M02/M05	SWRZ0F0 -M01/ M02/ M05	①	Electrode (Master Side)	1
		②	Parallel Pin ϕ3×8 B Type (SUS)	2
		③	Hexagon Socket Bolt M4×0.7×60 (SUS)	4
	SWRZ0F0	④	Bracket (Common for Master/Tool Side)	1
		⑤	Parallel Pin ϕ3×6 B Type (SUS)	1
		⑥	Hexagon Socket Bolt M3×0.5×10 (SUS)	2
		⑦	Hexagon Socket Bolt M4×0.7×12 (SUS)	2

Tool Adapter Side

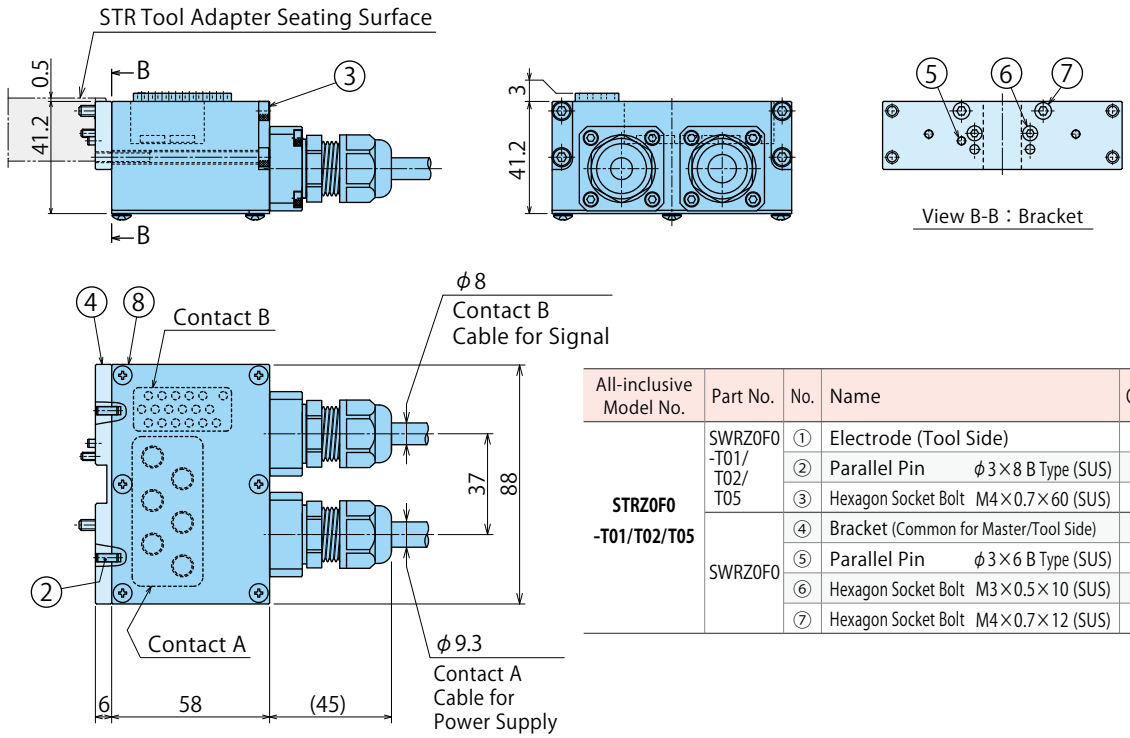

All-inclusive Model No.	Part No.	No.	Name	Quantity
STRZ0F0 -T01/T02/T05	SWRZ0F0 -T01/ T02/ T05	①	Electrode (Tool Side)	1
		②	Parallel Pin ϕ3×8 B Type (SUS)	2
		③	Hexagon Socket Bolt M4×0.7×60 (SUS)	4
	SWRZ0F0	④	Bracket (Common for Master/Tool Side)	1
		⑤	Parallel Pin ϕ3×6 B Type (SUS)	1
		⑥	Hexagon Socket Bolt M3×0.5×10 (SUS)	2
		⑦	Hexagon Socket Bolt M4×0.7×12 (SUS)	2

Note : 1. For SWLZ0F0-□01/02/05 the lead wire length is different from its shown in the specifications.
(SWLZ0F0-□01 : Lead Wire Length 1m, SWLZ0F0-□02 : Lead Wire Length 2m, SWLZ0F0-□05 : Lead Wire Length 5m)

External Option : Compact Waterproof Electrode (Noncontact Waterproof Option) IP67

Able to add an external option. Refer to P.59 for details.

External Option Symbol : **W/WX**

Model No. for Master Cylinder Side

model **SWLZ0 W/WX 0-M**

W : NPN
WX : PNP

Model No. for Tool Adapter Side

model **SWLZ0W0-T**

Specifications

Number of Signals (per electrode)		4
Protection Grade ※1		IP67
Cable		PUR ϕ6.3 7×0.259mm²
Cable Length	Master Cylinder Side	2m
	Tool Adapter Side	1m
Weight ※2	Master Cylinder Side	Electrode 20g + Cable 120g
	Tool Adapter Side	Electrode 20g + Cable 60g

※1. Protection grade of the electrode part.
※2. Weight per kit.

External Dimensions

Master Cylinder Side

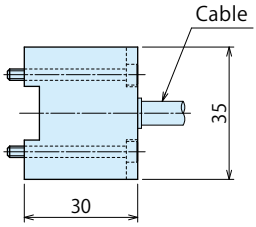

Model No.	No.	Name	Quantity
SWLZ0W0-M	①	Electrode (Master Side) **NPN** (B & Plus)	1
	③	Hexagon Socket Bolt M3×0.5×30 (SUS)※3	2

Model No.	No.	Name	Quantity
SWLZ0WX0-M	②	Electrode (Master Side) **PNP** (B & Plus)	1
	③	Hexagon Socket Bolt M3×0.5×30 (SUS)※3	2

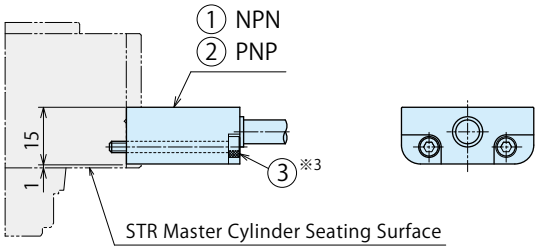

Tool Adapter Side

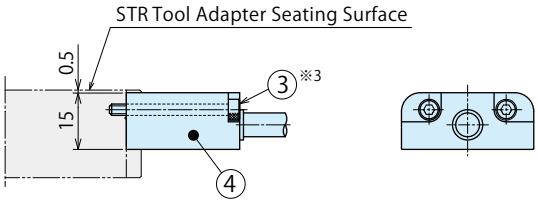

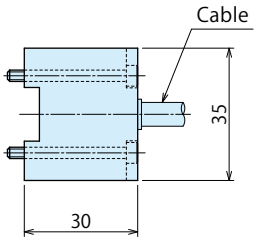

Model No.	No.	Name	Quantity
SWLZ0W0-T	④	Electrode (Tool Side) (B & Plus)	1
	③	Hexagon Socket Bolt M3×0.5×30 (SUS)※3	2

Note : ※3. The tightening torque for M3 mounting bolts marked with ※3 should be 0.63 N・m.

Details and Notes on External Option：Compact Noncontact Waterproof Electrode

Applicable Sensor

Supply Voltage	12V DC
Total Current Consumption	≦60mA
Residual Voltage	≦3.5V

※Total current consumption of sensors must not exceed the total rated output current.

Electrode Specifications (Tool Adapter Side)

Model No.	SWLZ0W0-T	
Applicable Sensor	DC 3-Wire Sensor	
Output Voltage	12V ±1.5V DC	
No. of Input Signals	4	
Total Output Current	≦ 30mA	≦ 60mA
Operating Distance	0~3mm	0~2mm
Operating Temperature	0 ～ 50℃	
Protection Grade	IP67	
Material	ABS	
Cable	PUR φ6.3 / 7×0.259mm² Hitachi Metals, Ltd. RBT-VUCTF	

Electrode Specifications (Master Cylinder Side)

Model No.	NPN	SWLZ0W0-M
	PNP	SWLZ0WX0-M
Supply Voltage (Input Voltage)		24V DC ±10% (Including Ripple)
Current Consumption		≦ 200mA
No. of Output Signals		4 + 1 (Inzone)
Load Current		≦ 50mA ／ 1 Output
Operating Temperature		0 ～ 50℃
Protection Grade		IP67
Material		ABS
Cable		PUR φ6.3 / 7×0.259mm² Hitachi Metals, Ltd. RBT-VUCTF

■ LED Indication　Status LED：Green

LED	Meaning
ON	The power is supplied.
OFF	The power is not supplied.
Blink	Blinks in case of abnormality.

■ LED Indication　Inzone LED：Orange

The master cylinder and tool adapter are opposed, LED is lit when you can communicate.

Wiring Diagram

SWLZ0W0-M（NPN）

■ For DC 3-wire NPN sensor connection

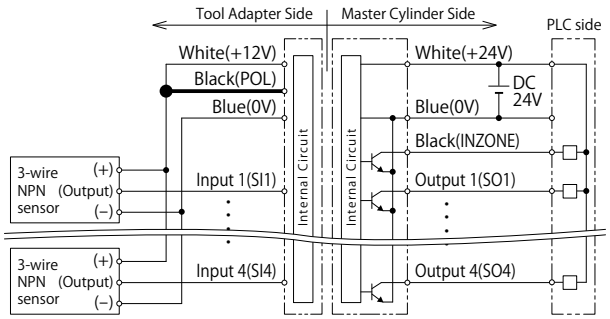

■ For DC 2-wire sensor connection (when NPN is set)

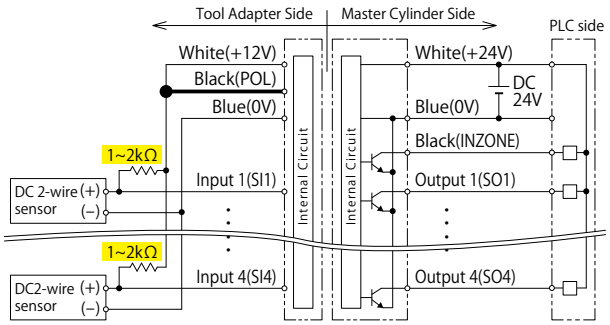

SWLZ0WX0-M（PNP）

■ For DC 3-wire PNP sensor connection

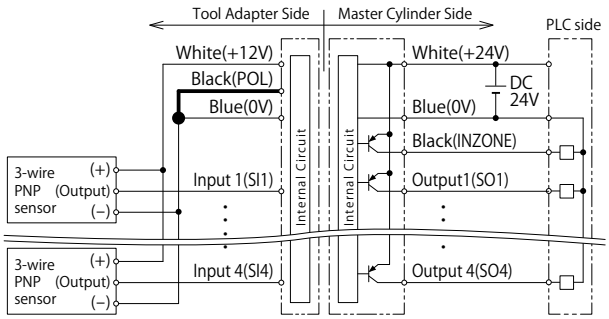

■ For DC 2-wire sensor connection (when PNP is set)

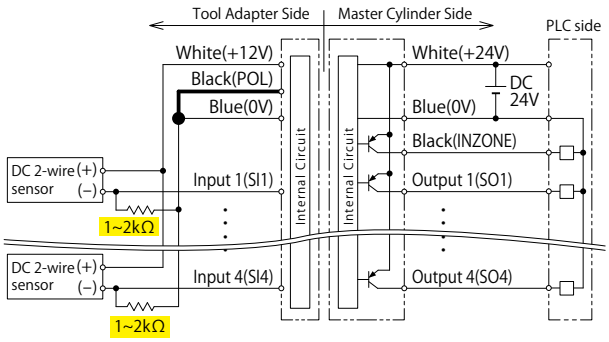

■ When connecting a DC 2-wire sensor, ensure to wire a resistor of about 1 to 2 k Ω.
■ POL is wiring for switching the polarity (NPN/PNP) of the sensor.

Wiring Color

■ Electrode for Tool Adapter side

Output + 12V	White
Output 0V	Blue
Polarity Switching POL	Black
Input 1 (SI1)	Brown
Input 2 (SI2)	Red
Input 3 (SI3)	Yellow
Input 4 (SI4)	Green

■ Electrode for Master Cylinder side

Input +24V	White
Input 0V	Blue
INZONE	Black
Output 1 (SO1)	Brown
Output 2 (SO2)	Red
Output 3 (SO3)	Yellow
Output 4 (SO4)	Green

Bending Radius of Cable

The minimum bending radius for the sensors are 50mm.
※ Do not pull the cable with excessive force.

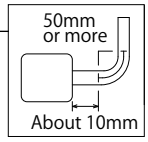

Attention for Installation

(Read this section thoroughly before installation.)

- Ensure the power is switched off during installation or maintenance operations.
- Use a regulated power supply, e.g. switch-model type. Simpler power supplies, such as a full-wave rectification type, will cause the permissible ripple rating to be exceeded and may cause malfunction.
- Do not put metal objects between electrodes during operation. Failure to do so may cause heat generation, ignition, or malfunction.
- Ensure correct connections by referencing the wiring diagram.
- To avoid malfunction caused by induction noise, cable should be kept apart from motor or other power cable.
- The control communication device in the product may affect electronic devices and medical devices. Persons wearing pacemakers should stay away from this product.
- In order to avoid influence of surrounding metal, or to avoid mutual influence between parallel-mounted sensors, keep the minimum free zone as described on the right.

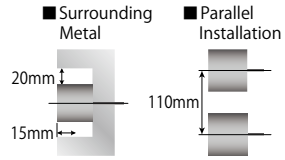

The information above is quoted from B & Plus K.K. Remote System User's Guide (No.T315201G).
Please contact B & Plus K.K. (TEL 81(0)-493-71-5160) for further information about electrodes (Model No. SWRZ0W0-M-_ _ / SWRZ0W0-T-_ _).

External Option：Waterproof Electrode (Noncontact Waterproof Option) IP67

External Option Symbol：**V/VX**

Model No. for Master Cylinder Side

model **SWLZ0** [V / VX] **0-** [M / M05]

V： NPN
VX：PNP

M： Cable 2m
M05：Cable 5m

Model No. for Tool Adapter Side

model **SWLZ0V0-T**

Specifications

Number of Signals (per electrode)		12
Protection Grade ※1		IP67
Cable		PUR ϕ8.6 2×0.5mm²+13×0.18mm²
Cable Length	Master Cylinder Side **-M**	2m
	Master Cylinder Side **-M05**	5m
	Tool Adapter Side	1m
Weight ※2	Master Cylinder Side **-M**	Electrode 130g + Cable 210g
	Master Cylinder Side **-M05**	Electrode 130g + Cable 525g
	Tool Adapter Side	Electrode 130g + Cable 105g

※1. Protection grade of the electrode part.
※2. Weight per kit.

External Dimensions

Master Cylinder Side

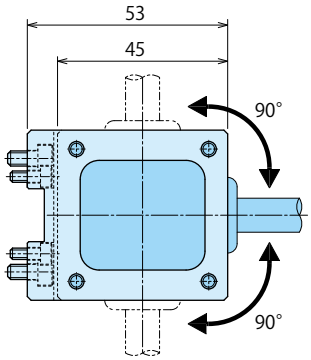

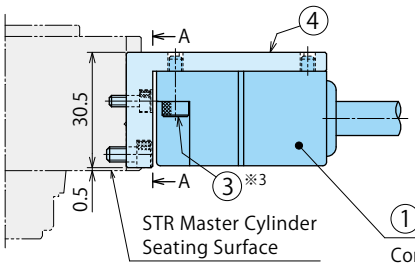

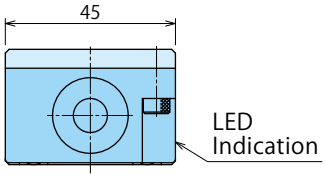

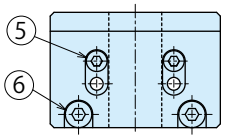

View A-A：Bracket

① NPN ② PNP

Consider the phasing (cable drawing direction) when mounting the electrode.

All-inclusive Model No.	Part No.	No.	Name	Quantity
SWLZ0V0 –M / M05	SWRZ 0V0-M/M05	①	Electrode (Master Side) **NPN** Made by B & Plus RS12E-422N-PU-02/05	1
		③	Hexagon Socket Bolt M4×0.7×12(SUS) ※3	2
	SWRZ 0V0	④	Bracket (Common for Master/Tool Side)	1
		⑤	Hexagon Socket Bolt M3×0.5×8(SUS)	2
		⑥	Hexagon Socket Bolt M4×0.7×8(SUS)	2

All-inclusive Model No.	Part No.	No.	Name	Quantity
SWLZ0VX0 –M / M05	SWRZ 0VX0-M/M05	②	Electrode (Master Side) **PNP** Made by B & Plus RS12E-422P-PU-02/05	1
		③	Hexagon Socket Bolt M4×0.7×12(SUS) ※3	2
	SWRZ 0V0	④	Bracket (Common for Master/Tool Side)	1
		⑤	Hexagon Socket Bolt M3×0.5×8(SUS)	2
		⑥	Hexagon Socket Bolt M4×0.7×8(SUS)	2

Tool Adapter Side

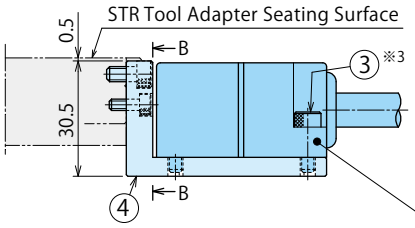

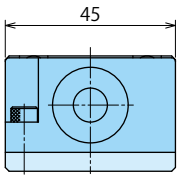

View B-B：Bracket

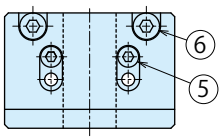

⑦ Consider the phasing (cable drawing direction) when mounting the electrode.

Even if the mounting phase of electrode on master and tool sides is different, signals can be transmitted.

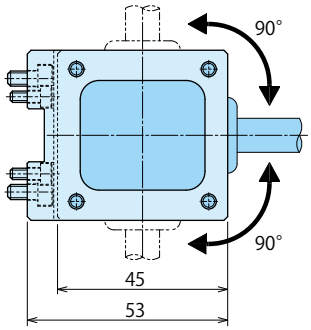

All-inclusive Model No.	Part No.	No.	Name	Quantity
SWLZ0V0-T	SWRZ 0V0-T	⑦	Electrode (Tool Side) Made by B & Plus RS12T-422-PU-01	1
		③	Hexagon Socket Bolt M4×0.7×12 (SUS) ※3	2
	SWRZ 0V0	④	Bracket (Common for Master/Tool Side)	1
		⑤	Hexagon Socket Bolt M3×0.5×8 (SUS)	2
		⑥	Hexagon Socket Bolt M4×0.7×8 (SUS)	2

Note：※3. The tightening torque for M4 mounting bolts marked with ※3 should be 1.5 N・m.

Details and Notes on External Option：Noncontact Waterproof Electrode

Applicable Sensor

Supply Voltage	12V DC
Total Current Consumption	≦230mA
Residual Voltage	≦3.5V

※Total current consumption of sensors must not exceed the total rated output current.

Electrode Specifications (Tool Adapter Side)

Model No.	SWLZ0V0-T
Applicable Sensor	DC 3-Wire Sensor
Output Voltage	12V ±1.5V DC
Total Output Current	≦ 230mA
No. of Input Signals	12
Operating Distance	2~5mm
Operating Temperature	0 ～ 50℃
Protection Grade	IP67
Material	ABS
Cable	PUR φ8.6 2×0.5mm²+13×0.18mm²

Electrode Specifications (Master Cylinder Side)

Model No.	NPN	SWLZ0V0-M/M05
	PNP	SWLZ0VX0-M/M05
Supply Voltage (Input Voltage)		24V DC±10% (Including Ripple)
Current Consumption		≦ 600mA
No. of Output Signals		12 +1 (INZONE)
Load Current		≦ 50mA / 1 Output
Operating Temperature		0 ～ 50℃
Protection Grade		IP67
Material		ABS
Cable		PUR φ8.6 2×0.5mm²+13×0.18mm²

■ LED Indication Status LED：Green

LED	Meaning
ON	The power is supplied.
OFF	The power is not supplied.
Blink	Blinks in case of abnormality.

■ LED Indication Inzone LED：Orange

The master cylinder and tool adapter are opposed, LED is lit when you can communicate. When there is an output signal from each sensor, it flashes accordingly.

Wiring Diagram

SWLZ0V0-M/M05 （NPN）

■ For DC 3-wire NPN sensor connection

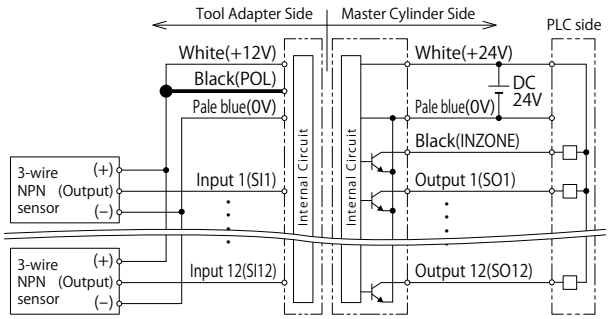

■ For DC 2-wire sensor connection (when NPN is set)

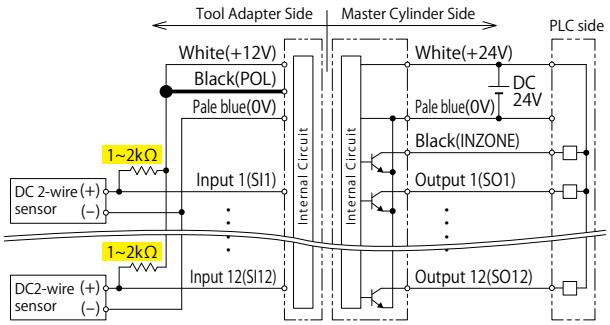

SWLZ0VX0-M/M05 （PNP）

■ For DC 3-wire PNP sensor connection

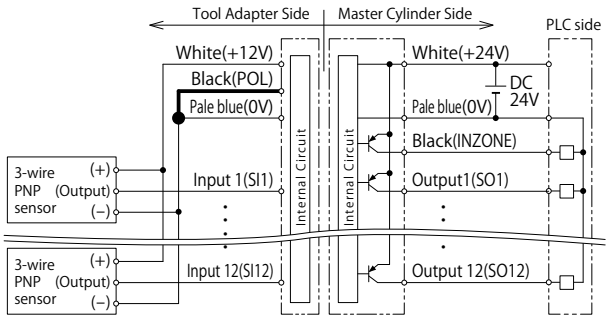

■ For DC 2-wire sensor connection (when PNP is set)

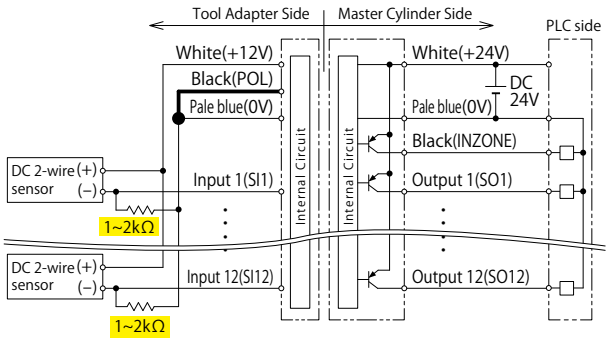

■ When connecting a DC 2-wire sensor, ensure to wire a resistor of about 1 to 2 k Ω.
■ POL is wiring for switching the polarity (NPN/PNP) of the sensor.

Wiring Color

■ Electrode for Tool Adapter side

Output + 12V	White
Output 0V	Pale blue
Polarity Switching POL	Black
Input 1 (SI1)	Brown
Input 2 (SI2)	Red
Input 3 (SI3)	Orange
Input 4 (SI4)	Yellow
Input 5 (SI5)	Green
Input 6 (SI6)	Blue
Input 7 (SI7)	Violet
Input 8 (SI8)	Gray
Input 9 (SI9)	Brown ＊▬▬
Input 10 (SI10)	Red ＊▬▬
Input 11 (SI11)	Orange＊▬▬
Input 12 (SI12)	Yellow ＊▬▬

■ Electrode for Master Cylinder side

Input +24V	White
Input 0V	Pale blue
INZONE	Black
Output 1 (SO1)	Brown
Output 2 (SO2)	Red
Output 3 (SO3)	Orange
Output 4 (SO4)	Yellow
Output 5 (SO5)	Green
Output 6 (SO6)	Blue
Output 7 (SO7)	Violet
Output 8 (SO8)	Gray
Output 9 (SO9)	Brown ＊▬▬
Output 10 (SO10)	Red ＊▬▬
Output 11 (SO11)	Orange＊▬▬
Output 12 (SO12)	Yellow ＊▬▬

■ ＊ is the line where ▬▬ is printed on the core wire of each color.
The unused lines are green＊, blue＊, and violet＊.

Bending Radius of Cable

The minimum bending radius for the sensors are 50mm.
※ Do not pull the cable with excessive force.

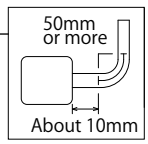

Attention for Installation

(Read this section thoroughly before installation.)

- Ensure the power is switched off during installation or maintenance operations.
- Use a regulated power supply, e.g. switch-model type. Simpler power supplies, such as a full-wave rectification type, will cause the permissible ripple rating to be exceeded and may cause malfunction.
- Do not put metal objects between electrodes during operation. Failure to do so may cause heat generation, ignition, or malfunction.
- Ensure correct connections by referencing the wiring diagram.
- To avoid malfunction caused by induction noise, cable should be kept apart from motor or other power cable.
- The control communication device in the product may affect electronic devices and medical devices. Persons wearing pacemakers should stay away from this product.
- In order to avoid influence of surrounding metal, or to avoid mutual influence between parallel-mounted sensors, keep the minimum free zone as described on the right.

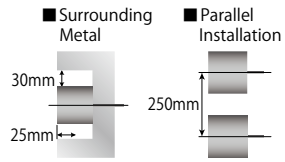

The information above is quoted from B & Plus K.K. Remote System User's Guide (No.T313A01Ue). Please contact B & Plus K.K. (TEL 81(0)-493-71-5160) for further information about electrodes (Model No. RS12E-422□-PU-02/05 and RS12T-422-PU-01).

External Option：Ethernet Electrode

External Option Symbol：**L**

Model No. for Master Cylinder Side
model **STRZ0L0-M**

Model No. for Tool Adapter Side
model **STRZ0L0-T**

Specifications

Rated Value (per contact)		DC 30V 0.5A
Number of Poles (per electrode)		4
Connector		M12 D-code 4 poles (Female) (based on IEC61076-2-101)
Ethernet Applicable Standard		100BASE-TX※3
Transmission Speed		100Mbps※3
Category		CAT5
Applicable Fieldbus		EtherNet/IP EtherCAT PROFINET Modbus TCP CC-Link IE Field Network Basic※2
Weight※1	Master Cylinder Side	130 g
	Tool Adapter Side	120 g

※1. Weight per kit.
※2. Cannot be used with a fieldbus that requires a communication speed of 1Gbps such as CC-Link IE.
※3. In the case transmission speed of Ethernet applicable standard 1000BASE-T (transmission speed : 1 Gbps) is required, please contact us.

External Dimensions

Master Cylinder Side

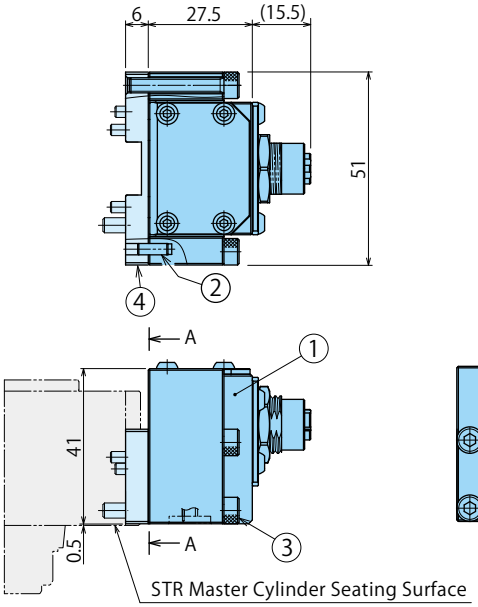

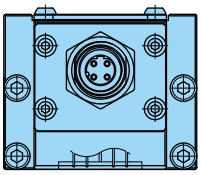

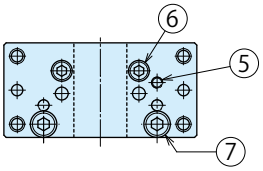

View A-A：Bracket

All-inclusive Model No.	Part No.	No.	Name	Quantity
STRZ0L0-M	SWRZ0L0-M	①	Electrode (Master Side)	1
		②	Parallel Pin ϕ3×8 B Type (SUS)	2
		③	Hexagonal Socket Bolt M4×0.7×25 (SUS)	4
	SWRZ0E0	④	Bracket (Common for Master/Tool Side)	1
		⑤	Parallel Pin ϕ3×6 B Type (SUS)	1
		⑥	Hexagonal Socket Bolt M3×0.5×10 (SUS)	2
		⑦	Hexagonal Socket Bolt M4×0.7×12 (SUS)	2

Tool Adapter Side

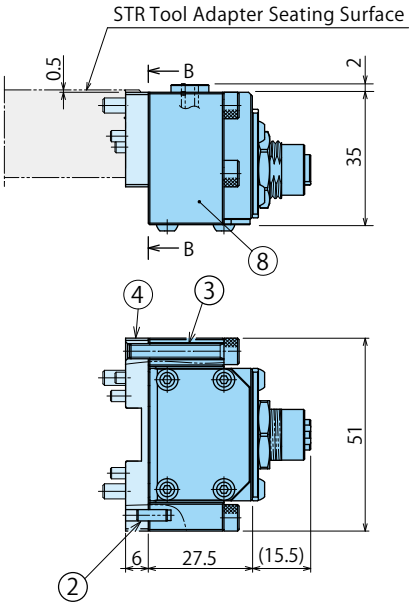

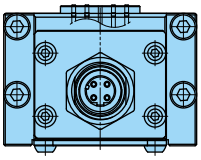

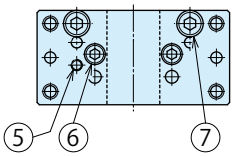

View B-B：Bracket

All-inclusive Model No.	Part No.	No.	Name	Quantity
STRZ0L0-T	SWRZ0L0-T	⑧	Electrode (Tool Side)	1
		②	Parallel Pin ϕ3×8 B Type (SUS)	2
		③	Hexagonal Socket Bolt M4×0.7×25 (SUS)	4
	SWRZ0E0	④	Bracket (Common for Master/Tool Side)	1
		⑤	Parallel Pin ϕ3×6 B Type (SUS)	1
		⑥	Hexagonal Socket Bolt M3×0.5×10 (SUS)	2
		⑦	Hexagonal Socket Bolt M4×0.7×12 (SUS)	2

MEMO

External Option : Air Joint 3-Port Option (1 Port Rc1/8)

Able to add an external option.
Refer to P.59 for details.

External Option Symbol : **R**

Model No. for Master Cylinder Side
model **SWLZ0R0-M**

Model No. for Tool Adapter Side
model **SWLZ0R0-T**

Specifications

Port Size		Rc1/8	M5
Number of Ports		1	2
Operating Pressure		max. 0.7MPa (Vacuum Available)	
Withstanding Pressure		1.1MPa	
Min. Passage Area		28.3mm²	3.1mm²
Operating Temperature		0 ~ 70℃	
Usable Fluid		Dry Air	
Reaction Force (per port)	Pressure at 0.7 MPa	0.13 kN	0.04kN
	Pressure at 0.5 MPa	0.10 kN	0.03kN
	Pressure at P MPa	0.154×P+0.019 kN	0.047×P+0.008 kN
Weight ※1	Master Cylinder Side	54 g	
	Tool Adapter Side	28 g	

※1. Weight per kit.

External Dimensions

Master Cylinder Side

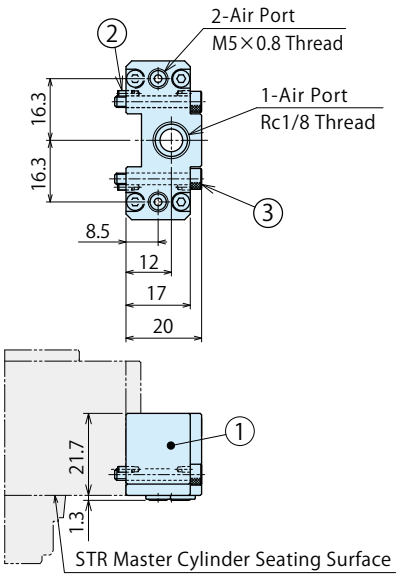

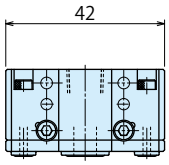

Model No.	No.	Name		Quantity
SWLZ0R0-M	①	Joint (Master Side)		1
	②	Parallel Pin	φ1.5×4 B Type (SUS)	2
	③	Hexagon Socket Bolt	M3×0.5×20 (SUS)	2

Tool Adapter Side

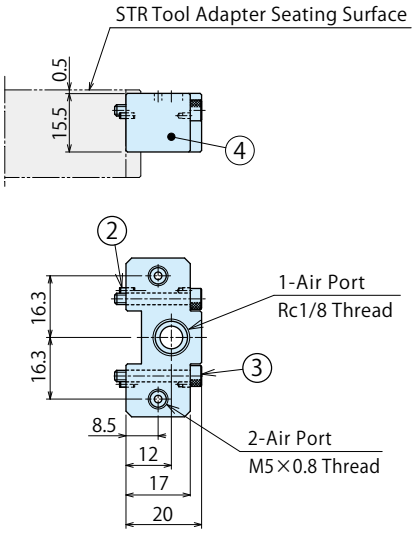

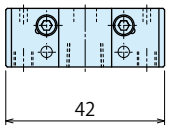

Model No.	No.	Name		Quantity
SWLZ0R0-T	④	Joint (Tool Side)		1
	②	Parallel Pin	φ1.5×4 B Type (SUS)	2
	③	Hexagon Socket Bolt	M3×0.5×20 (SUS)	2

External Option : Air Joint 2-Port Option

External Option Symbol : **Q**

Model No. for Master Cylinder Side
model **STRZ0Q0-M**

Model No. for Tool Adapter Side
model **STRZ0Q0-T**

Specifications

Number of Ports		2
Operating Pressure		max. 1.0MPa (Vacuum Available)
Withstanding Pressure		1.5MPa
Min. Passage Area		12.6mm² (Equal to φ4)
Operating Temperature		0 ~ 70℃
Usable Fluid		Dry Air
Reaction Force (per port)	Pressure at 1 MPa	0.13 kN
	Pressure at 0.5 MPa	0.07 kN
	Pressure at P MPa	0.117×P +0.01 kN
Weight ※1	Master Cylinder Side	90 g
	Tool Adapter Side	80 g

※1. Weight per kit.

External Dimensions

Master Cylinder Side

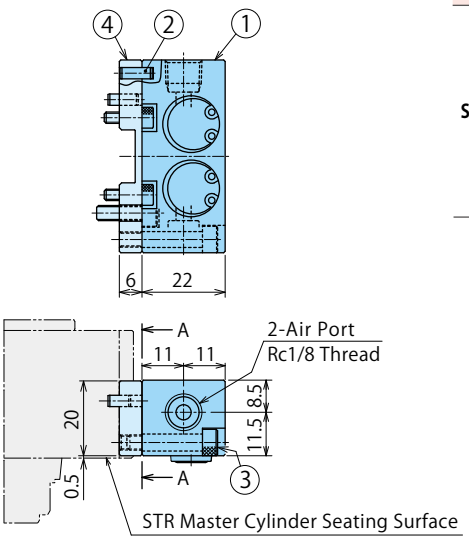

All-inclusive Model No.	Part No.	No.	Name	Quantity
STRZ0Q0-M	SWRZ0Q0-M	①	Joint (Master Side)	1
		②	Parallel Pin φ3×8 B Type (SUS)	2
		③	Hexagonal Socket Bolt M4×0.7×20 (SUS)	2
	SWRZ0Z0	④	Bracket (Common for Master/Tool Side)	1
		⑤	Parallel Pin φ3×8 B Type (SUS)	1
		⑥	Hexagonal Socket Bolt M3×0.5×10 (SUS)	2
		⑦	Hexagonal Socket Bolt M4×0.7×12 (SUS)	2

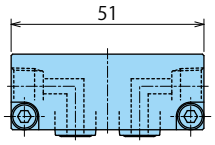

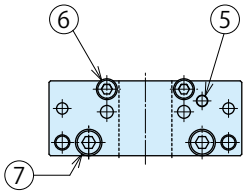

View A-A : Bracket

Tool Adapter Side

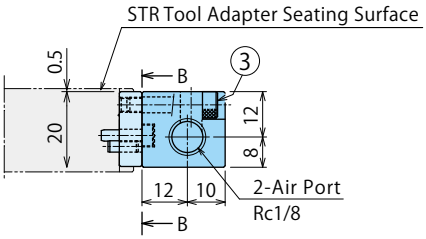

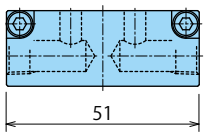

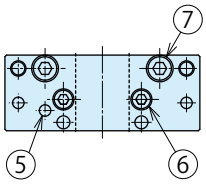

View B-B : Bracket

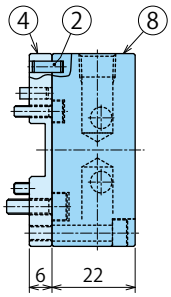

All-inclusive Model No.	Part No.	No.	Name	Quantity
STRZ0Q0-T	SWRZ0Q0-T	⑧	Joint (Tool Side)	1
		②	Parallel Pin φ3×8 B Type (SUS)	2
		③	Hexagonal Socket Bolt M4×0.7×20 (SUS)	2
	SWRZ0Z0	④	Bracket (Common for Master/Tool Side)	1
		⑤	Parallel Pin φ3×8 B Type (SUS)	1
		⑥	Hexagonal Socket Bolt M3×0.5×10 (SUS)	2
		⑦	Hexagonal Socket Bolt M4×0.7×12 (SUS)	2

External Option：Air Joint 4-Port Option

Able to add an external option.
Refer to P.59 for details.

External Option Symbol：**P**

Model No. for Master Cylinder Side
model **SWLZ0P0-M**

Model No. for Tool Adapter Side
model **SWLZ0P0-T**

Air Port Position
Side：2 ports, Bottom：2 ports

Specifications

Number of Ports		4
Operating Pressure		max. 1.0MPa (Vacuum Available)
Withstanding Pressure		1.5MPa
Min. Passage Area		3.1mm² (Equal to φ2)
Operating Temperature		0 ~ 70℃
Usable Fluid		Dry Air
Reaction Force (per port)	Pressure at 1 MPa	0.03 kN
	Pressure at 0.5 MPa	0.02 kN
	Pressure at P MPa	0.027×P +0.004 kN
Weight ※1	Master Cylinder Side	74 g
	Tool Adapter Side	64 g

※1. Weight per kit.

External Dimensions

Master Cylinder Side

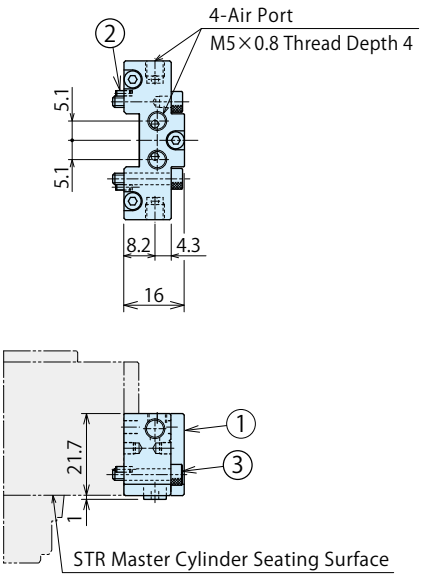

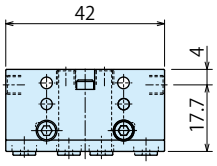

Model No.	No.	Name	Quantity
SWLZ0P0-M	①	Joint (Master Side)	1
	②	Parallel Pin φ1.5×4 B Type (SUS)	2
	③	Hexagon Socket Bolt M3×0.5×16 (SUS)	2

Tool Adapter Side

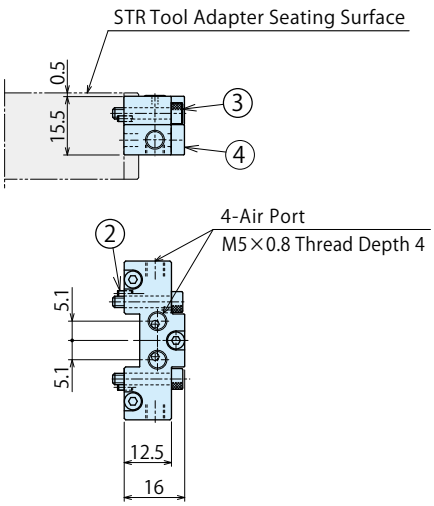

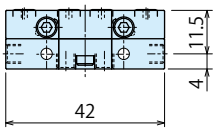

Model No.	No.	Name	Quantity
SWLZ0P0-T	④	Joint (Tool Side)	1
	②	Parallel Pin φ1.5×4 B Type (SUS)	2
	③	Hexagon Socket Bolt M3×0.5×16 (SUS)	2

External Option : Air Joint 4-Port Option

Able to add an external option. Refer to P.59 for details.

External Option Symbol : **PZ9**

Model No. for Master Cylinder Side
model **SWLZ0PZ90-M**

Model No. for Tool Adapter Side
model **SWLZ0PZ90-T**

Air Port Position
Bottom : 4 ports

Specifications

Number of Ports		4
Operating Pressure		max. 1.0MPa (Vacuum Available)
Withstanding Pressure		1.5MPa
Min. Passage Area		3.1mm² (Equal to φ2)
Operating Temperature		0 ~ 70℃
Usable Fluid		Dry Air
Reaction Force (per port)	Pressure at 1 MPa	0.03 kN
	Pressure at 0.5 MPa	0.02 kN
	Pressure at P MPa	0.027×P +0.004 kN
Weight ※1	Master Cylinder Side	74 g
	Tool Adapter Side	64 g

※1. Weight per kit.

External Dimensions

Master Cylinder Side

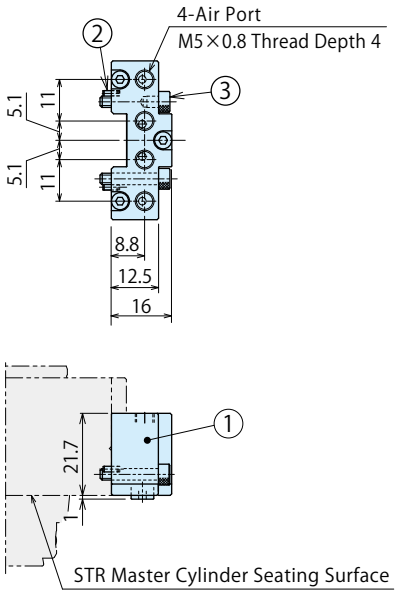

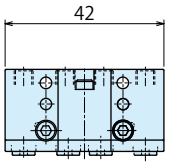

Model No.	No.	Name	Quantity
SWLZ0PZ90-M	①	Joint (Master Side)	1
	②	Parallel Pin φ1.5×4 B Type (SUS)	2
	③	Hexagon Socket Bolt M3×0.5×16 (SUS)	2

Tool Adapter Side

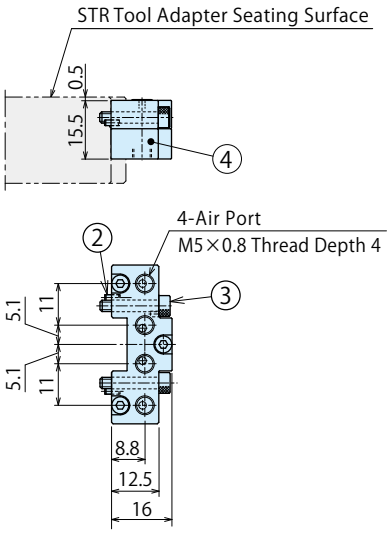

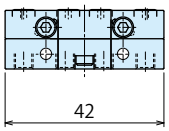

Model No.	No.	Name	Quantity
SWLZ0PZ90-T	④	Joint (Tool Side)	1
	②	Parallel Pin φ1.5×4 B Type (SUS)	2
	③	Hexagon Socket Bolt M3×0.5×16 (SUS)	2

Mounting Dimension of Two Options

This table shows the required numbers of spring lock washers and bolt length, and combination of option symbols when mounting two external options together.

This mark means :
Able to mount two options together.

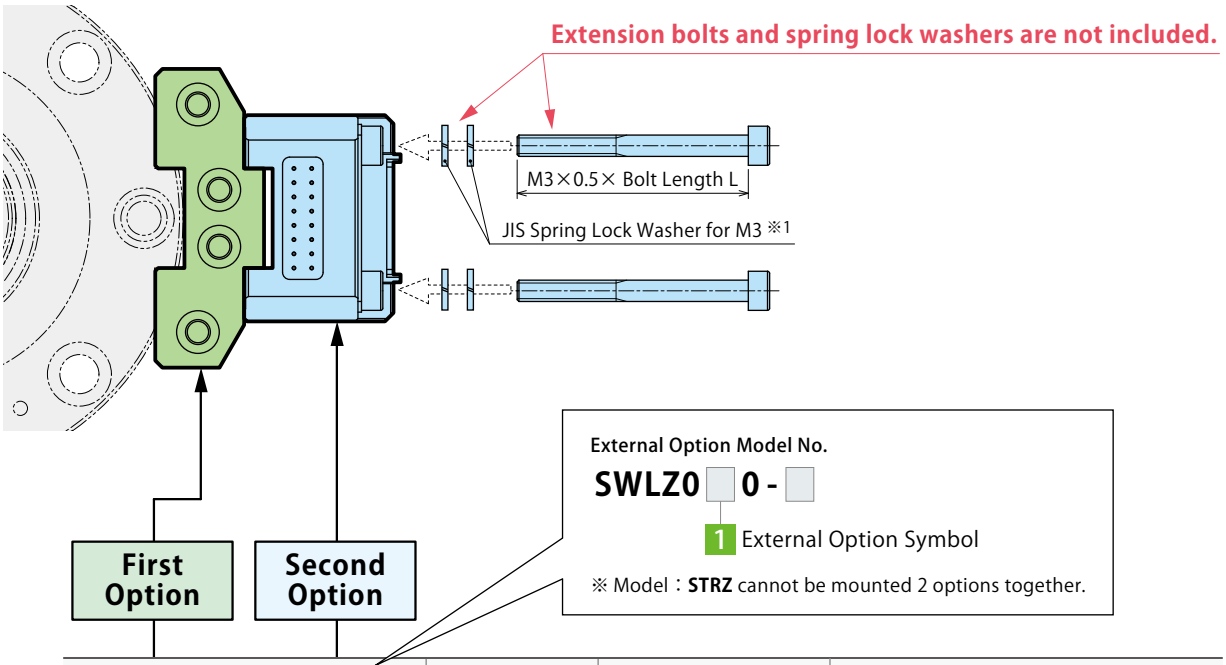

1 External Option Symbol		M3×0.5 Bolt Length L (mm)	Number of JIS Spring Lock Washers for M3※1	Remarks
First Option	Second Option			
B / C	B / C	30	0	Remove bolt cover from the first option.
K	B / C	30	0	Remove bolt cover from the first option.
	J	35	4	
	K	30	0	
	U	40	2	
P / PZ9	B / C	30	0	
	J	35	4	
	K	30	0	
	U	40	2	
	P / PZ9	30	2	
	W	45	2	
R	B / C	35	2	
	J	40	4	
	K	35	2	
	U	45	4	
	P / PZ9	35	2	
	R	40	4	
	W	50	4	

Note :
※1. When the number of spring lock washers is 0 on the table, it is not required to mount it.
When 2, mount 1 per bolt; when 4, mount 2 per bolt.

Cautions for External Options

Notes for Design

1) Check Specifications
- Please use each product according to the specifications.

2) Operating Environment (Electrode)
- Do not use the product in the environment with water・vapor・liquid・scattering of chemicals・explosion・gas with causticity. Also, using in the environment with cutting chips・cutting fluid・dust・spatter scattering may lead to continuity error of electrode. We offer IP67-Compatible Noncontact Waterproof Electrode for the environment with water・vapor・liquid・cutting chips.

3) Electrification of Electrodes while Connecting/Disconnecting (Electrode)
- If connecting/disconnecting robotic hand changer while energized (hot swapping), there will be a discharge phenomenon (spark phenomenon) between the electrodes opposing each other. The tips of contact probes and electrode bars will be severely worn down due to the phenomenon, and the basis metal might be melted due to oxidation or abrasion of gold-plating leading to conduction failure. Electricity should be shut off while connecting/disconnecting the robotic hand changer. In case of continuous electrification with more than 40 ~ 60% of rated current, it is recommended to use multiple electrodes in a line. (In order to improve durability of contact probes.)

Installation Notes

1) Please supply filtered clean dry air.
- Make sure to supply filtered clean dry air.
- Oil supply with a lubricator etc. is unnecessary.

2) Preparation for Piping
- The pipeline, piping connector and fixture circuits should be cleaned and flushed thoroughly. The dust and cutting chips in the circuit may lead to fluid leakage and malfunction.
- There is no filter provided with this product for prevention of contaminants in the air circuit.

3) Applying Sealing Tape
- When using sealing tape, wrap with it 1 to 2 times following the screwing direction. When piping, be careful that contaminant such as sealing tape does not enter in products. Pieces of the sealing tape can cause air leaks and malfunction.

4) Notes on Wire/Cable Procedure and Wiring (Electrode)
- Make sure to fix the wire and cable so that they are not pulled while a robot is moving or turning around. External force should not be applied on the connector part since it leads to breaking of wire, detaching of connector and contact failure.

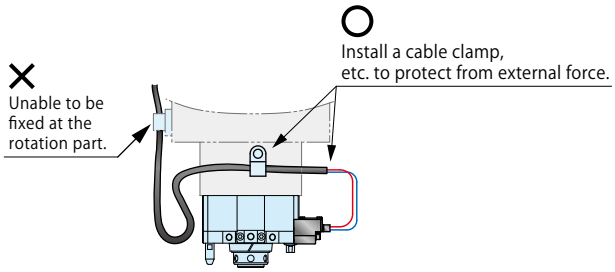

- When allocating each electric signal, imperceptible signal and power signal should be apart. Otherwise noise will be propagated from power signal to imperceptible signal (except for F : Servo Electrode). Also it is the same for wire and cable of external options (electrode). Make sure to keep imperceptible signal from power signal.

5) Connection Method for -D/E/G/H/J/L：Connector
- A Connector must be fully inserted into the electrode. As for -D/E/G/H/L options, make sure to screw up the connector. If a connector is not fully inserted or screwed up, it will cause contact failure. Tightening Torque for -D：D-SUB Connector：0.3N・m

6) Notes for using -K：Compact Electric Power Transmission
- As for Compact Electric Power Transmission option, the electrode probes on both master cylinder and tool adaptor are exchangeable. The electrode probes will be fallen out if pushed from the cable connecting side with power stronger than a certain level. In case the electrode probes are pushed out after connecting the cable, make sure to push them back from the seating surface side before use.

Continuing "Installation Notes" on the Next Page

Cautions for External Options

Installation Notes (Continued)

7) Installation of External Option
For bolt for electrode or joint, apply screw lock glue (equivalent to 1401 made by ThreeBond) on the tip of the mounting bolt and tighten it with the tightening torque shown in Table A.
For bolt for bracket, apply screw lock glue (equivalent to 1344 made by ThreeBond) on the tip of the mounting bolt and tighten it with the tightening torque shown in Table B.
When mounting, use the attached pins and tighten them with bolts evenly not to incline the master cylinder and tool adapter.

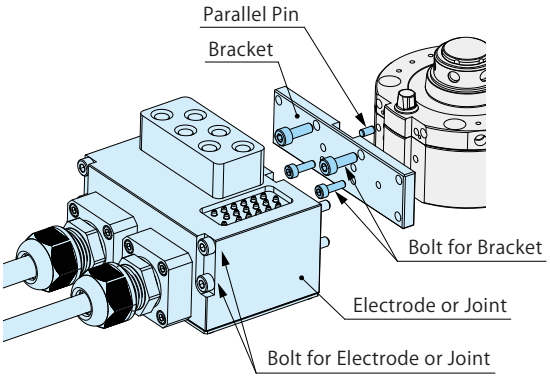

【Table A：Tightening Torque of Bolt for Electrode or Joint】

External Option Symbol	Model No.	Bolt Size / Tightening Torque
J	SWLZ0J0-M/T	M3×0.5：0.5 N・m
B	SWLZ0B0-M/T	
C	SWLZ0C0-M□/T□	
U	SWLZ0U0-M□/T□	
K	SWLZ0K0-M/T	
W	SWLZ0W0-M/T	M3×0.5：0.63 N・m
WX	SWLZWX0-M/T	
D	STRZ0D0-M/T	M4×0.7：1.5 N・m
G	STRZ0G0-M/T	
E	STRZ0E0-M/T	
H	STRZ0H0-M/T	
F	STRZ0F0-M□/T□	
V	SWLZ0V0-M□/T	
VX	SWLZ0VX0-M□/T	
L	STRZ0L0-M/T	
R	SWLZ0R0-M/T	M3×0.5：1.3 N・m
P	SWLZ0P0-M/T	
PZ9	SWLZ0PZ90-M/T	
Q	STRZ0Q0-M/T	M4×0.7：3.2 N・m

【Table B：Tightening Torque of Bolt for Bracket】

External Option Symbol	Model No.	Bolt Size / Tightening Torque
D	STRZ0D0-M/T	Bolt for Bracket M3×0.5：1.3 N・m M4×0.7：3.2 N・m
G	STRZ0G0-M/T	
E	STRZ0E0-M/T	
H	STRZ0H0-M/T	
F	STRZ0F0-M□/T□	
V	SWLZ0V0-M/T	
VX	SWLZVX0-M/T	
L	SWLZ0L0-M/T	
Q	STRZ0Q0-M/T	

Notes on Handling

1) It should be operated by qualified personnel.
- Machines and devices with hydraulic and pneumatic products should be operated and maintained by qualified personnel.

2) Do not operate or remove the product unless safety protocols are ensured.
① Machines and devices can only be inspected or prepared when it is confirmed that the safety devices are in place.
② Before the product is removed, make sure that the above-mentioned safety devices are in place. Shut off the pressure and power source, and make sure no pressure exists in the air and hydraulic circuits.
③ After stopping the product, do not remove until the temperature drops.
④ Make sure there is no trouble/issue in the bolts and respective parts before restarting the machine or equipment.

3) Do not touch a master cylinder, a tool adapter or an external option while it is working. Otherwise, your hands may be injured.

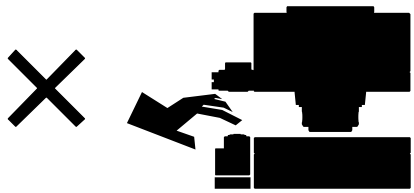

4) When the robot is in operation, make sure the safety of environment in case of a tool/workpiece detachment.

5) Do not disassemble or modify.
- If the equipment is taken apart or modified, the warranty will be voided even within the warranty period.

Maintenance・Inspection

1) Removal of the Product and Shut-off of Pressure Source

- Before removing the product, make sure that the safety devices are in place. Shut off the pressure and power source and make sure no pressure exists in the air circuit.
- Make sure there is no trouble/issue in the bolts and respective parts before restarting.

2) Regularly examine and retighten piping, mounting bolts and wires to ensure proper use.

3) Make an inspection before use and regularly.

- If there is dirt or dust on the electric contact part, electric signal is hard to conduct. Wipe it out with a cloth soaked in an organic solvent such as IPA.
- If there is a contact failure while in use, make an inspection mainly of the electricity connection part and clean it out.
  If the contact probe of master cylinder has abnormality, it has to be replaced.

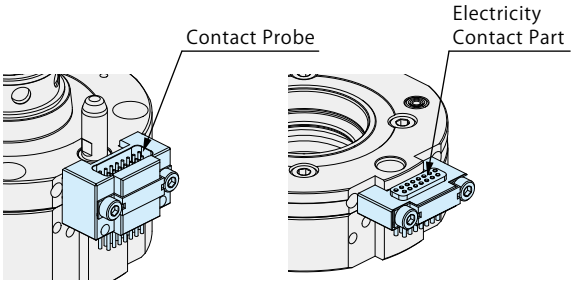

4) Make sure to supply filtered clean dry air.

5) Make sure there is smooth action and no air leaks.

- Especially when it is restarted after left unused for a long period, make sure it can be operated properly.
  If there is air leak while connecting, please contact us for overhaul and repair.

6) The products should be stored in the cool and dark place without direct sunshine or moisture.

7) Please contact us for overhaul and repair.

Warranty

1) Warranty Period

- The product warranty period is 18 months from shipment from our factory or 12 months from initial use, whichever is earlier.

2) Warranty Scope

- If the product is damaged or malfunctions during the warranty period due to faulty design, materials or workmanship, we will replace or repair the defective part at our expense.
  Defects or failures caused by the following are not covered.

① If the stipulated maintenance and inspection are not carried out.
② Failure caused by the use of the non-confirming state at the user's discretion.
③ If it is used or operated in an inappropriate way by the operator.
（Including damage caused by the misconduct of the third party.）
④ If the defect is caused by reasons other than our responsibility.
⑤ If repair or modifications are carried out by anyone other than Kosmek, or without our approval and confirmation, it will void warranty.
⑥ Other caused by natural disasters or calamities not attributable to our company.
⑦ Parts or replacement expenses due to parts consumption and deterioration.
(Such as rubber, plastic, seal material and some electric components.)

Damages excluding from direct result of a product defect shall be excluded from the warranty.

KOSMEK
Harmony in Innovation

KOSMEK LTD.

https://www.kosmek.com/

HEAD OFFICE 1-5, 2-chome, Murotani, Nishi-ku, Kobe-city, Hyogo, Japan 651-2241
TEL.+81-78-991-5162 FAX.+81-78-991-8787

United States of America SUBSIDIARY	KOSMEK (USA) LTD. 650 Springer Drive, Lombard, IL 60148 USA TEL. +1-630-620-7650 FAX. +1-630-620-9015
MEXICO REPRESENTATIVE OFFICE	KOSMEK USA Mexico Office Av. Santa Fe 103, Int. 59, col. Santa Fe Juriquilla, Queretaro, QRO, 76230, Mexico TEL. +52-442-851-1377
EUROPE SUBSIDIARY	KOSMEK EUROPE GmbH Schleppeplatz 2 9020 Klagenfurt am Wörthersee Austria TEL. +43-463-287587 FAX. +43-463-287587-20
CHINA SUBSIDIARY	KOSMEK (CHINA) LTD. Room601, RIVERSIDE PYRAMID No.55, Lane21, Pusan Rd, Pudong Shanghai 200125, China TEL. +86-21-54253000
INDIA BRANCH OFFICE	KOSMEK LTD. - INDIA 4A/Old No:649, Ground Floor, 4th D cross, MM Layout, Kavalbyrasandra, RT Nagar, Bangalore -560032 India TEL.+91-9880561695
THAILAND REPRESENTATIVE OFFICE	KOSMEK Thailand Representation Office 67 Soi 58, RAMA 9 Rd., Phatthanakan, Suanluang, Bangkok 10250, Thailand TEL. +66-2-300-5132 FAX. +66-2-300-5133

- For Further Information on Unlisted Specifications and Sizes, Please call us.
- Specifications in this Leaflet are Subject to Change without Notice.

ISO 9001
JQA-QMA10823
KOSMEK HEAD OFFICE

JAB
MS
CM009

CAT.NO. SBR-STR001-01-G1B
Printed in Japan

2025/03 First 0Ry