Assembly Instructions for

Strafer™ Chassis Kit (104mm GripForce™ Mecanum Wheels)

SKU: 3209-0001-0007

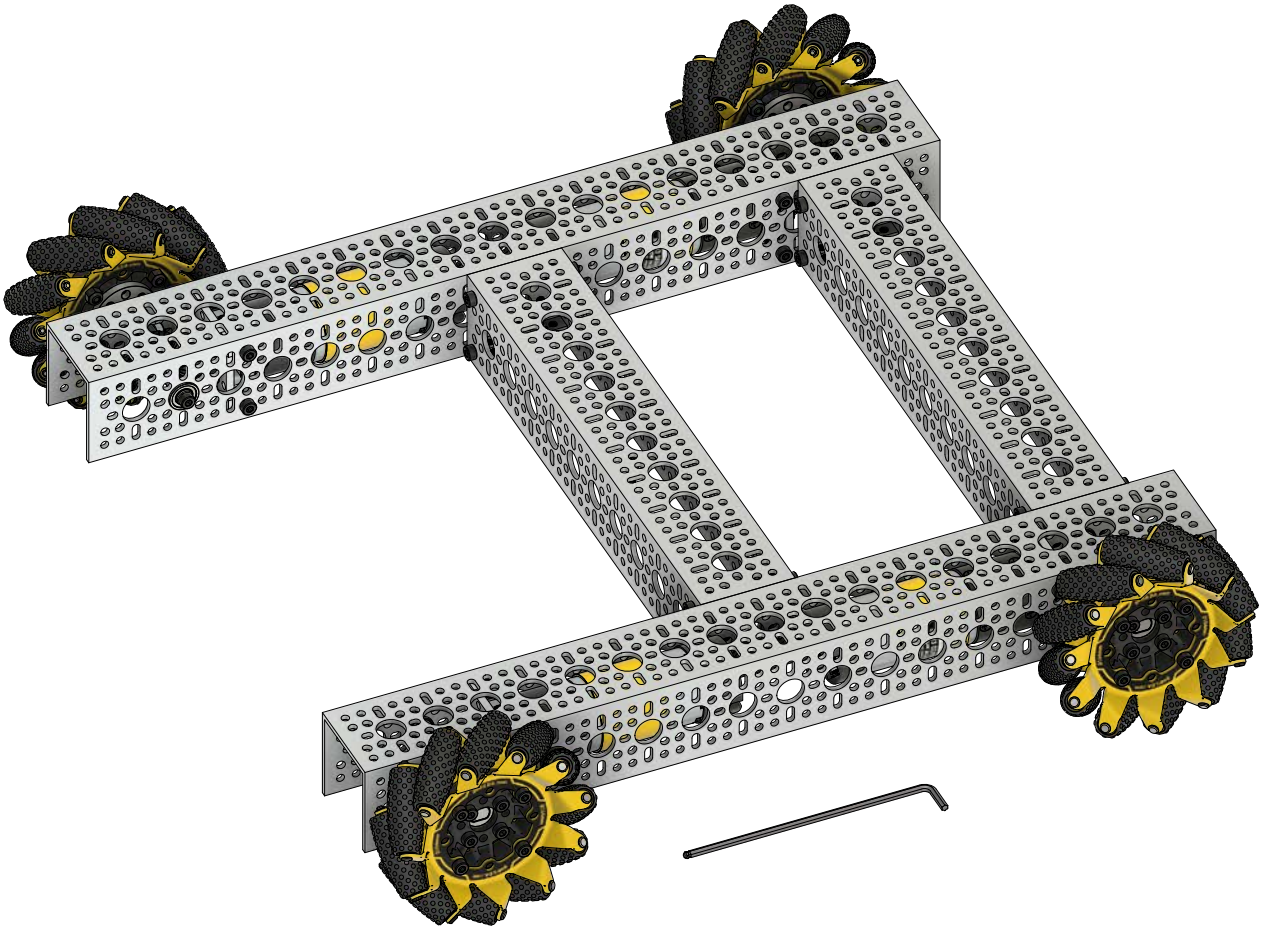

Kit Contents:

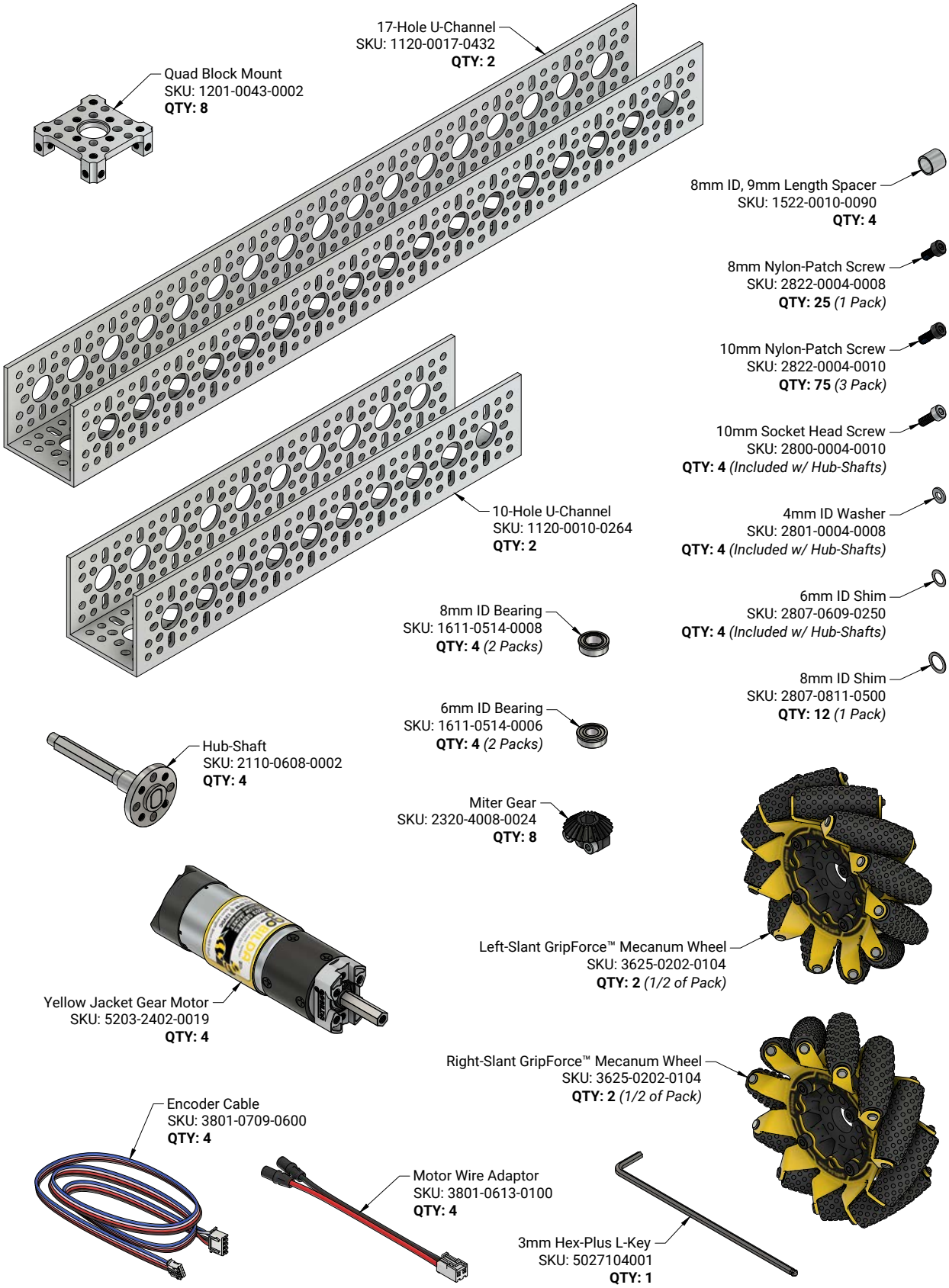

STEP 1:

Assemble **one** 17-Hole U-Channel, **two** Hub-Shafts, **two** 6mm ID Shims, **two** 8mm ID Bearings, **two** Miter Gears, **two** 6mm ID Bearings, **two** 4mm ID Washers, and **two** 10mm Nylon-Patch Screws, with one Hub-Shaft in the second hole from either end, as shown. When assembling the Miter Gears, note the orientation of the build-in shim.

Check each Hub-Shaft to observe if it can slide up and down in the bearings. If it can, some slack can be removed by relocating teh 6mm ID Shim to the other side of the 6mm ID Bearing (**FIGURE 1-A**).

FIGURE 1-A

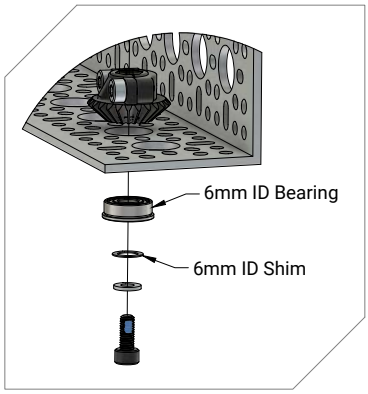

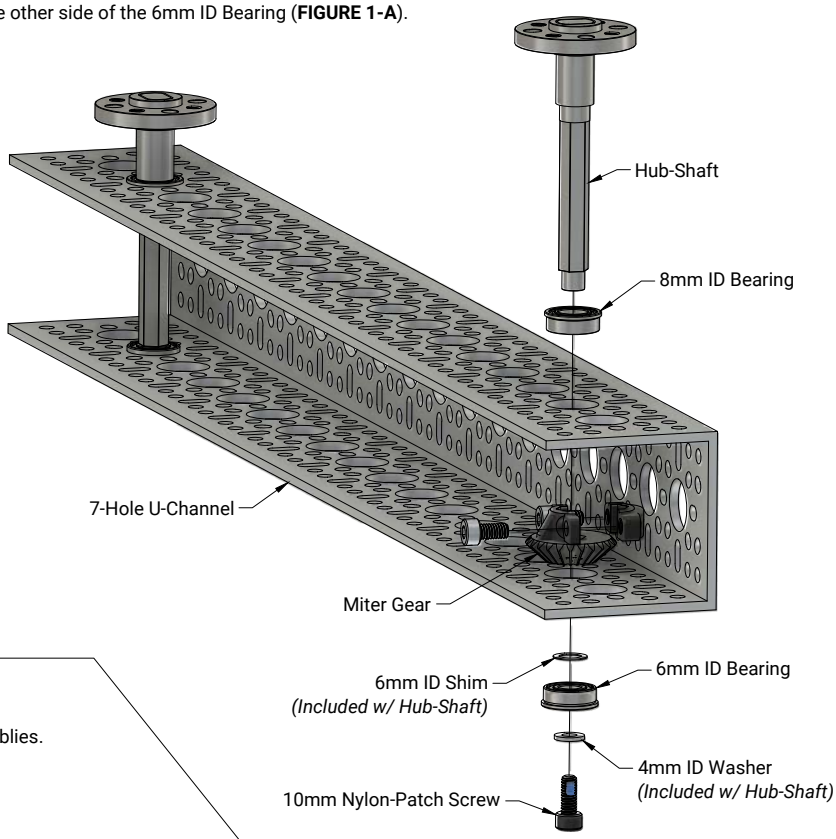

STEP 2:

Repeat **STEP 1** to create two identical subassemblies.

STEP 3:

Use **eight** 10mm Nylon-Patch Screws to combine **two** Quad Block Mounts and **one**10-Hole U-Channel as shown.

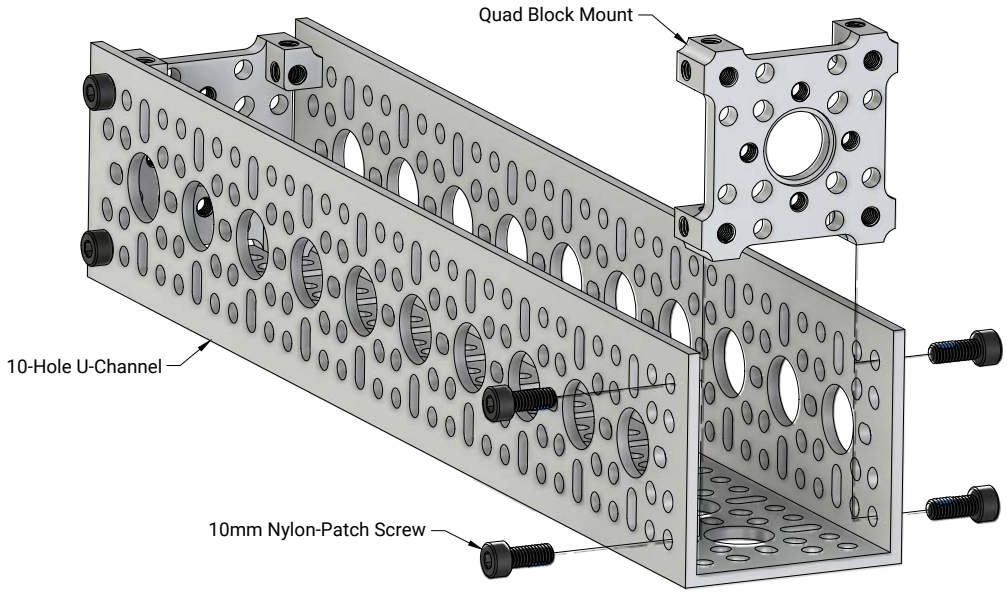

STEP 4:

Repeat **STEP 3** to create two identical subassemblies.

STEP 5:

Use **sixteen** 8mm Nylon-Patch Screws to comboine the subassemblies from **STEP 2** and **STEP 4** as shown.

Note the mounting locations (**FIGURE 5-A**), with one crossbeam located on the second hole from the end of the sides, and the other located on the ninth (center) hole.

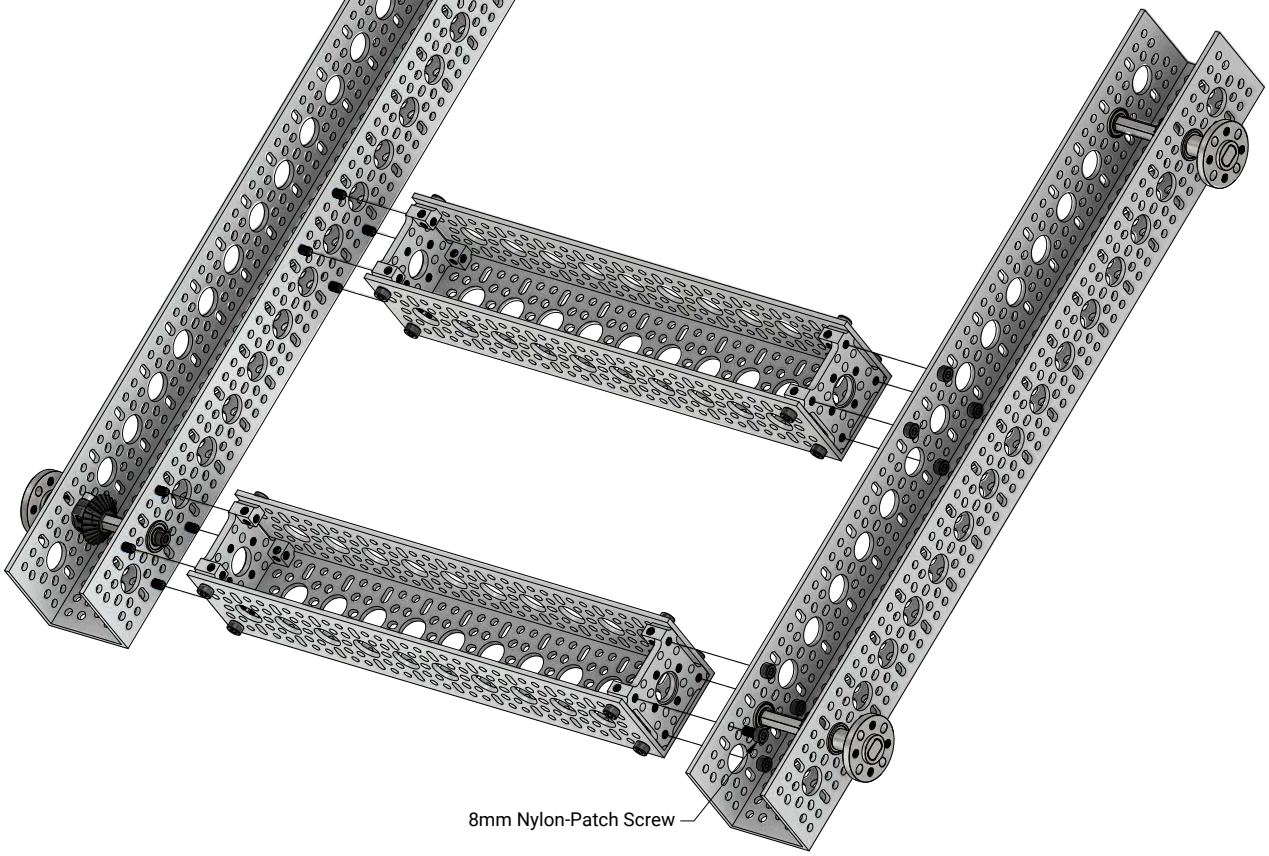

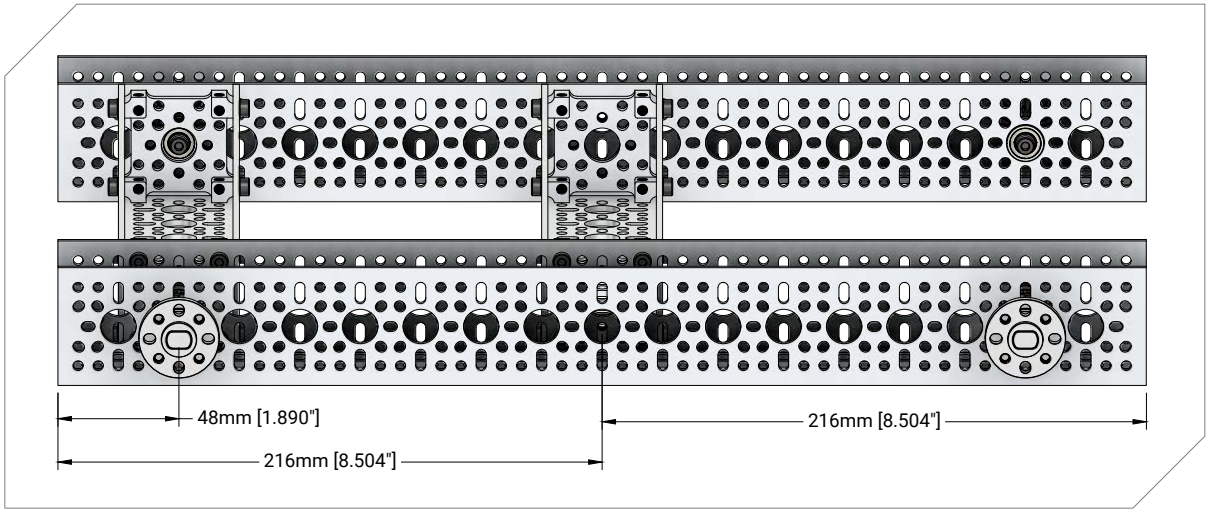

FIGURE 5-A

STEP 6:

Use **four** 10mm Nylon-Patch Screws to attach **one** Yellow Jacket Gear Motor to **one** Quad Block Mount as shown. Be sure to go through the thru-slots in the Quad Block Mount.

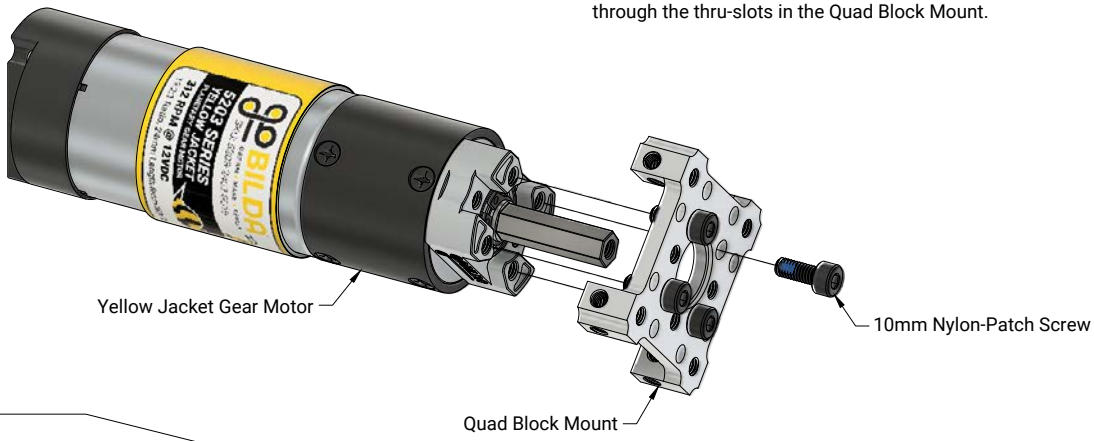

STEP 7:

Assemble **two** 8mm ID Shims, **one** 8mm ID, 9mm Length Spacer, and **one** Miter Gear as shown.

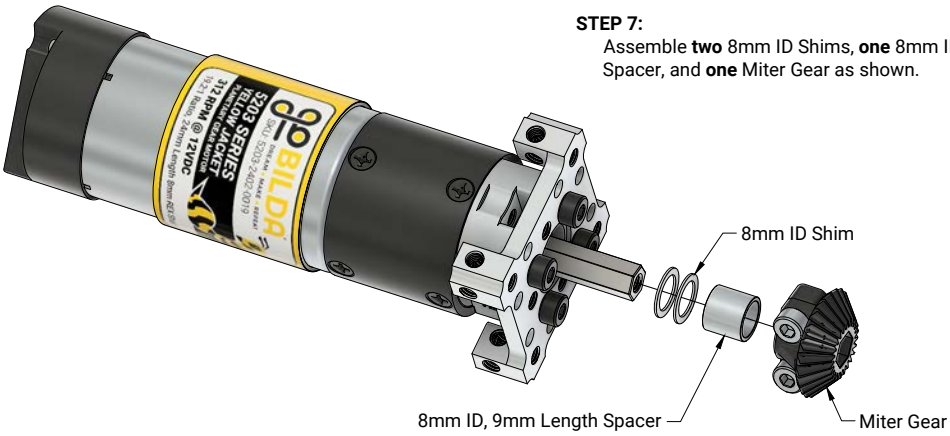

STEP 8:

Repeat **STEP 6** and **STEP 7** three times to create four identical subassemblies.

STEP 9:

Integrate the subassemblies from **STEP 8** into the subassembly from **STEP 5** using **sixteen** 10mm Nylon-Patch Screws as shown.

Take note of the gear mesh. It is recommended to ensure the gears are "in-phase" (**FIGURE 9-A**), as opposed to "out-of-phase" (**FIGURE 9-B**). The easiest way to tell is to make sure the pinch bolts on one of the Miter Gears is "exposed", while the others are "hidden".

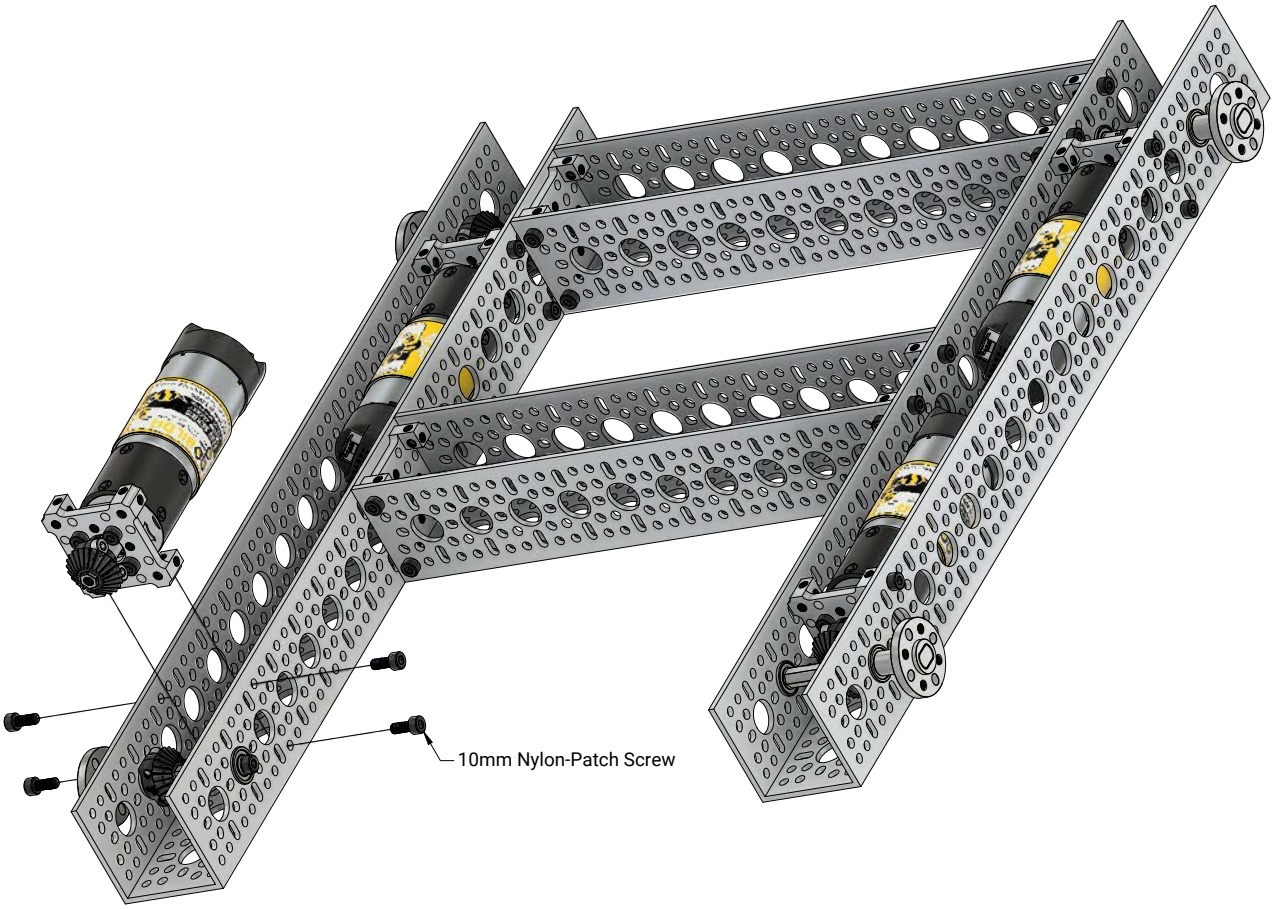

FIGURE 9-A

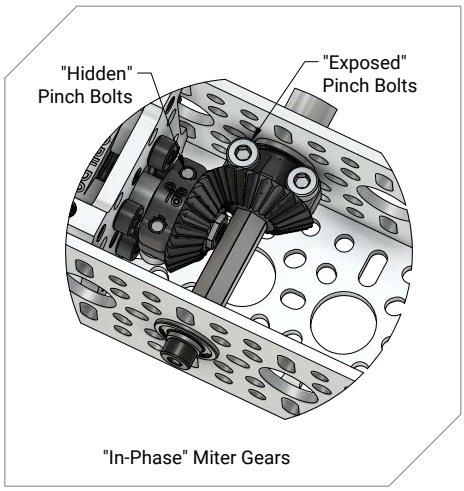

FIGURE 9-B

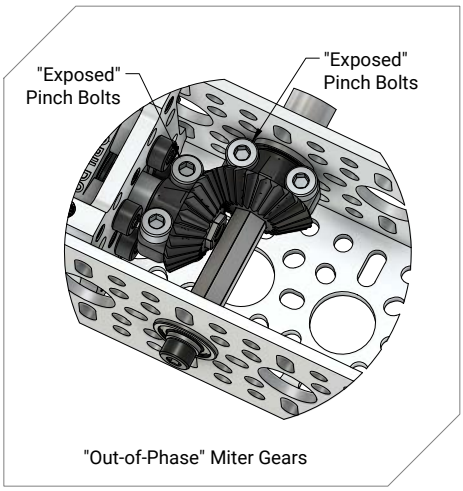

STEP 10:

Attach **two** Right-Slant Mecanum Wheels and **two** Left-Slant Mecanum Wheels using **sixteen** 4mm ID Washers and **sixteen** 10mm Nylon-Patch Screws as shown.

Note the configuration of the differently slanted wheels. In the correct configuration, the rollers on the wheels will point out diagonally from the center of the chassis when viewed from above (**FIGURE 10-B**).

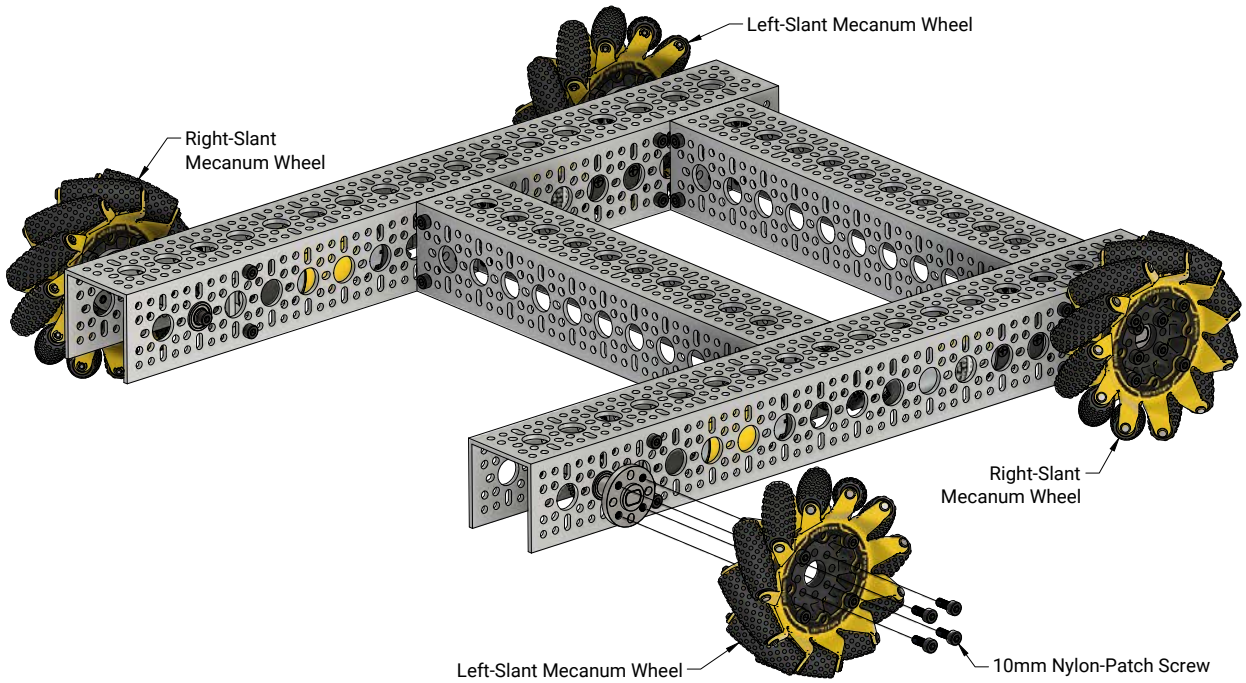

FIGURE 10-A

FIGURE 10-B

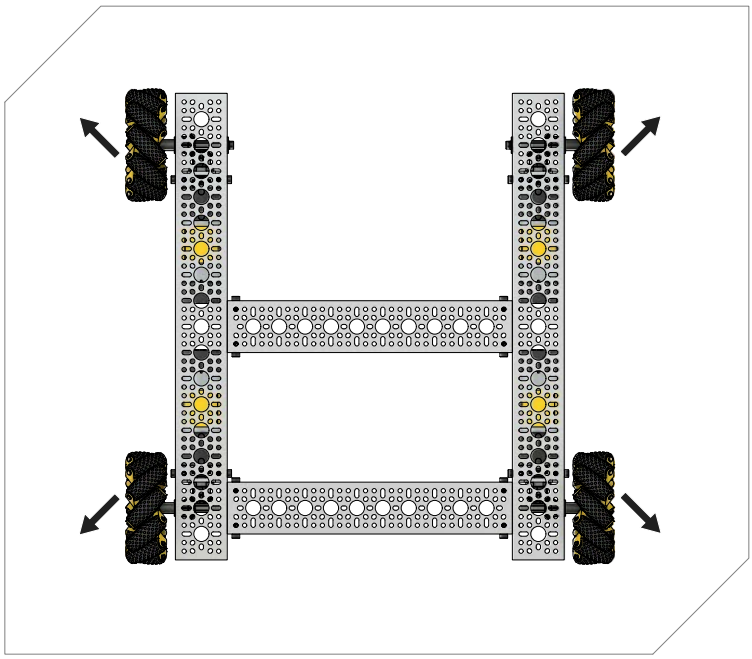

STEP 11:

Before connecting a power source to your completed kit, check the smoothness of each wheel's rotation by hand. A small amount of backlash between the gears is ideal. To reduce any excess friction in a wheel's rotation, one 8mm ID Shim can be removed from that wheel's associated subassembly from **STEP 7** (**FIGURE 11-A**).

FIGURE 11-A

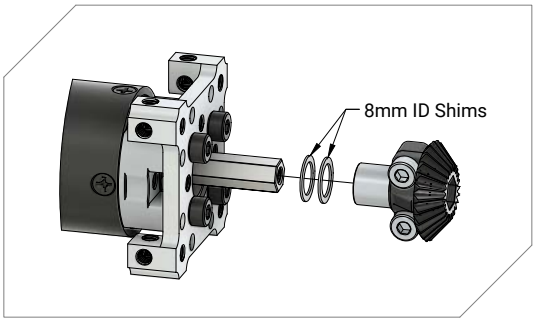

Congratulations!
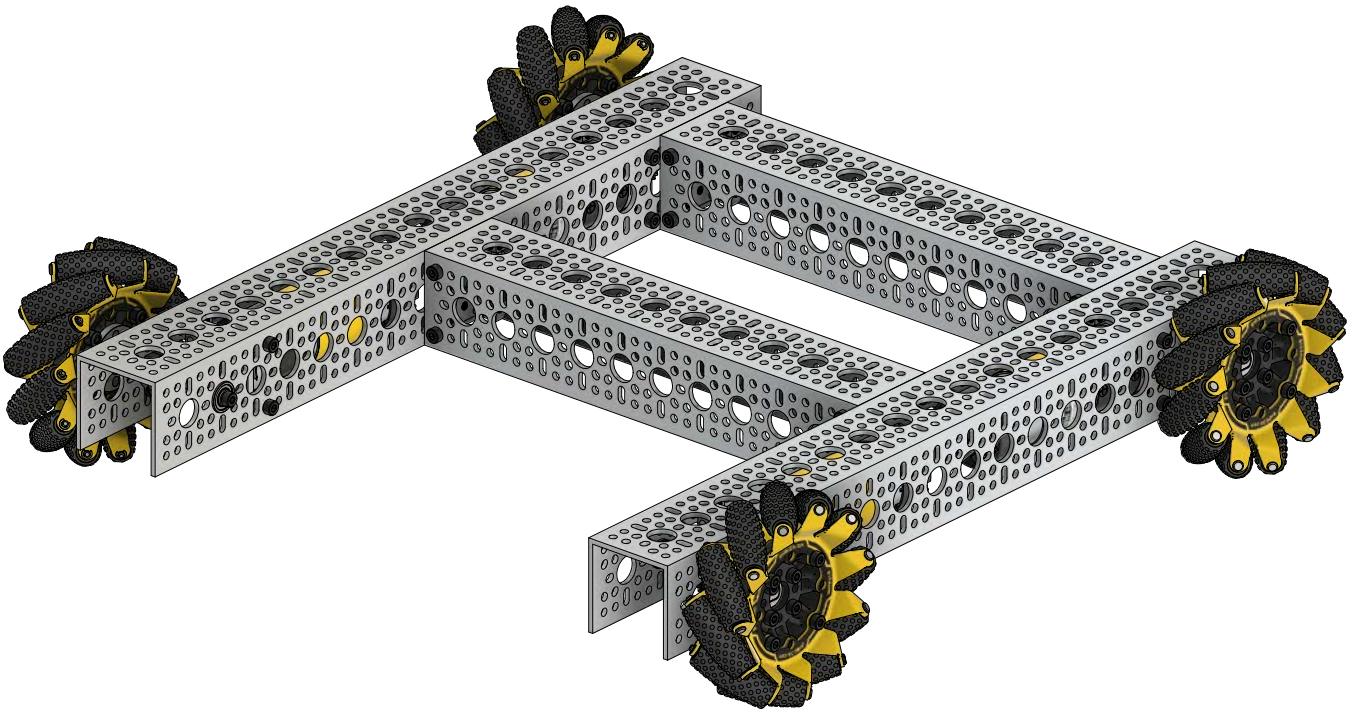
Go forth an roll forward—or any other direction you want—into the wild world of omnidirectional movement!