Assembly Instructions for

Overlander-T All-Terrain Robot Platform (25lb Payload, 2.3mph)

SKUs: 3209-0013-0003 & 3209-0013-0103

Kit Contents

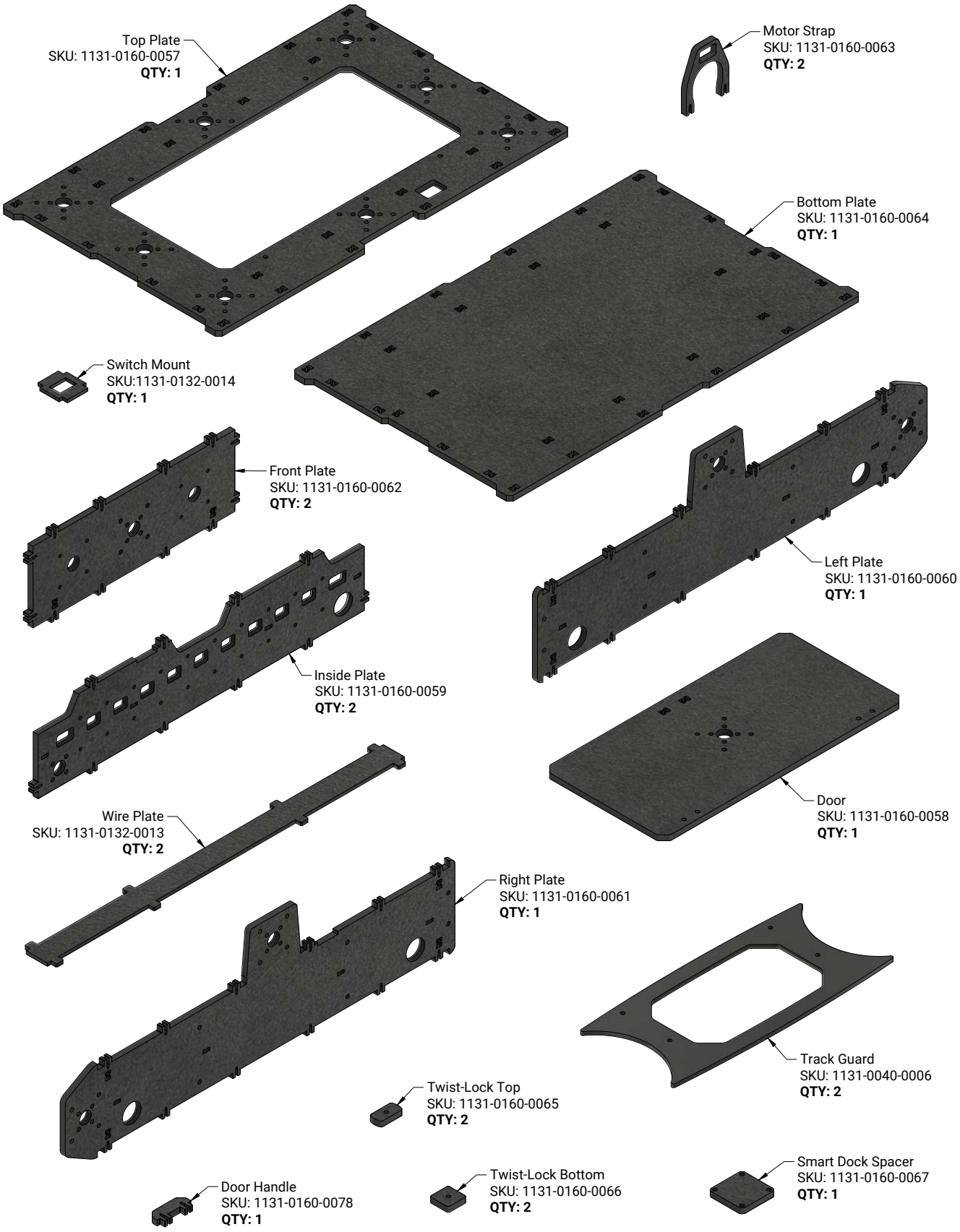

Kit Contents (*Cont*)

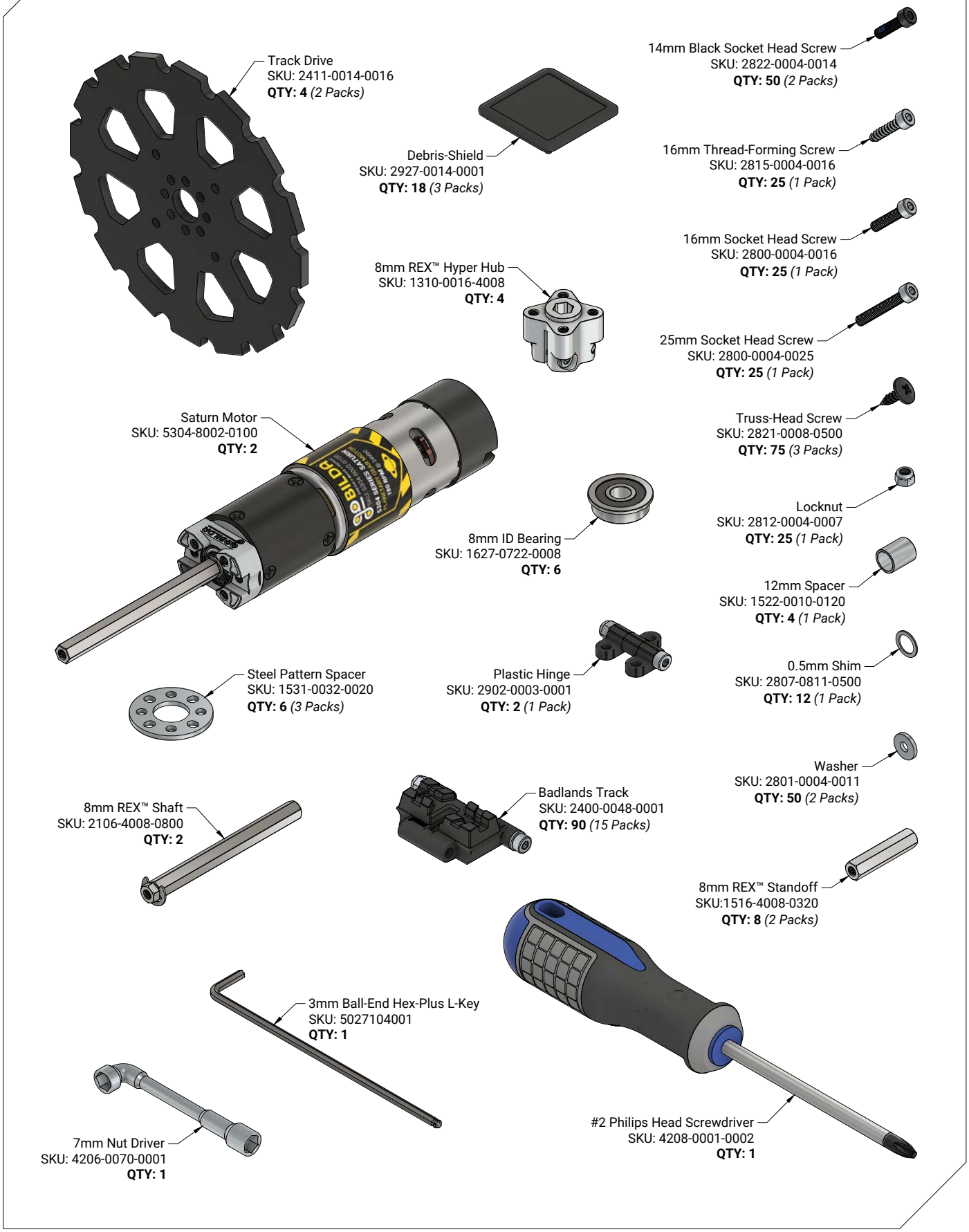

Kit Contents (*Cont*)

Wiring Diagram

Make sure to connect all wires according to this diagram. Note the wire colors.

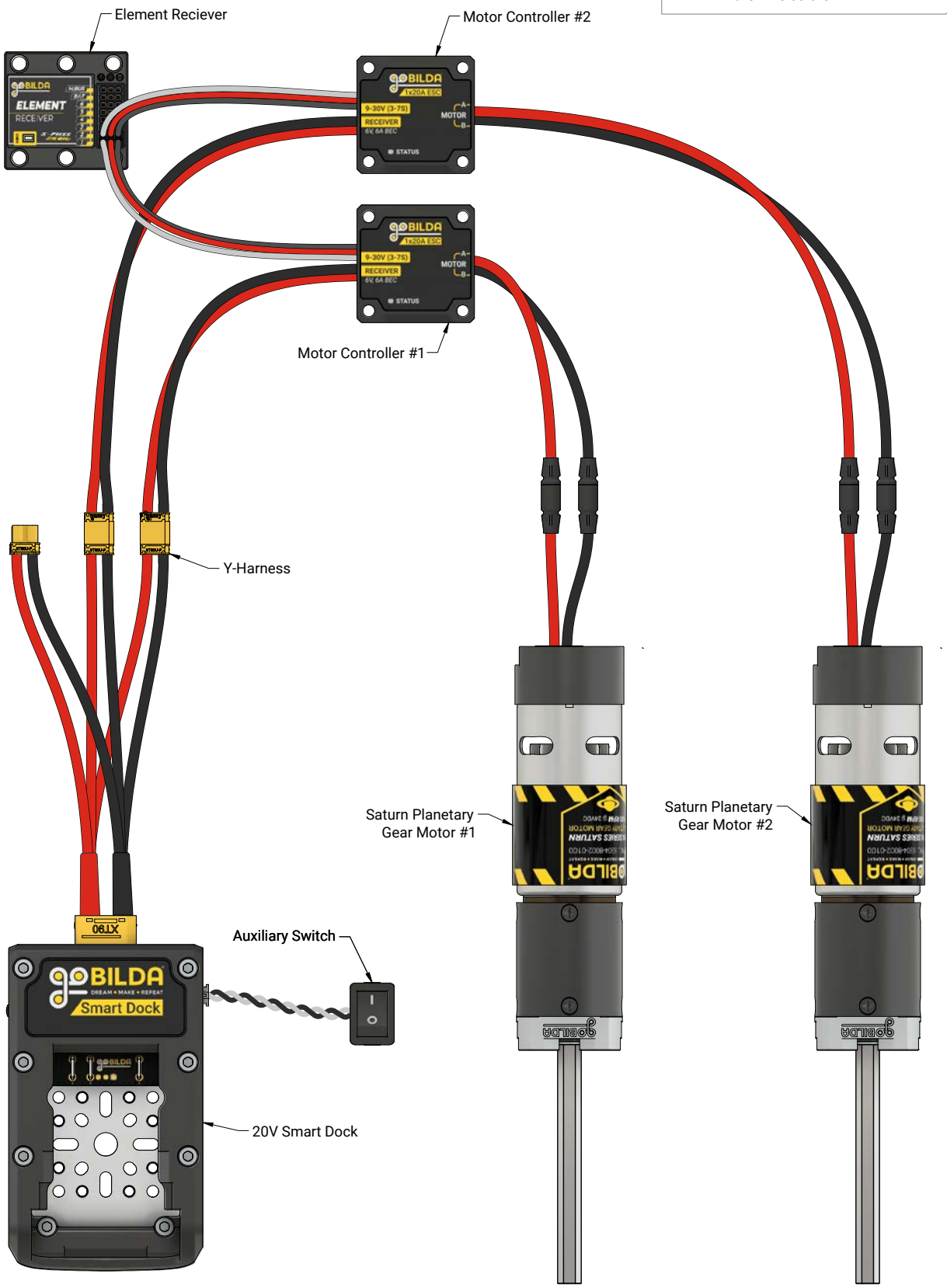

Before You Start:

When assembling with plastic plates, note the orientation of the plates' different textures and assemble as shown in each STEP illustration.

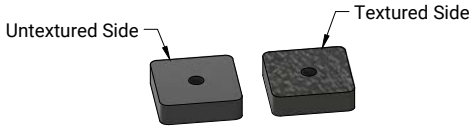

STEP 1:

Use **four** 14mm Black Socket Head Screws to assemble **one** Steel Pattern Spacer, **one** Saturn Motor, and **one** Inside Plate as shown.

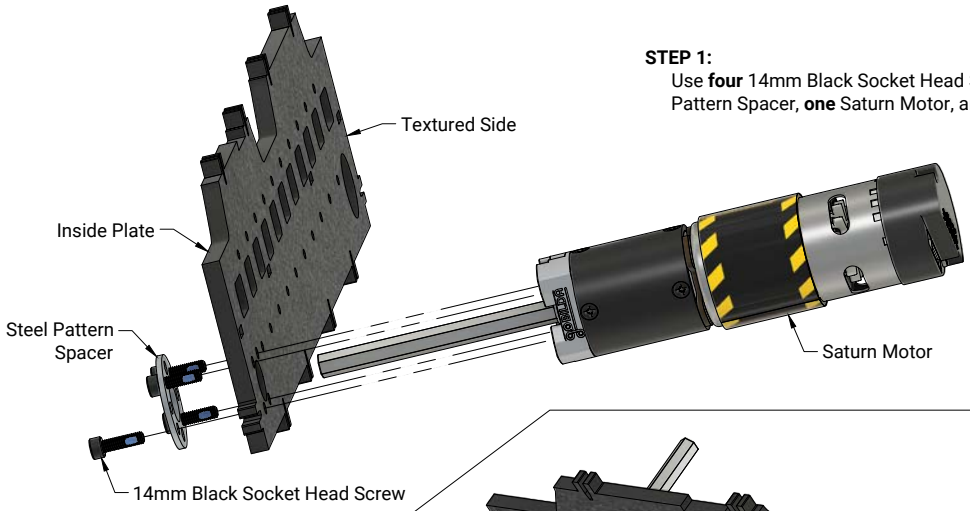

STEP 2:

Attach **one** 20V Smart Dock and **one** Smart Dock Spacer using **four** 16mm Thread-Forming Screws as shown.

Make sure the 20V Smart Dock is off.

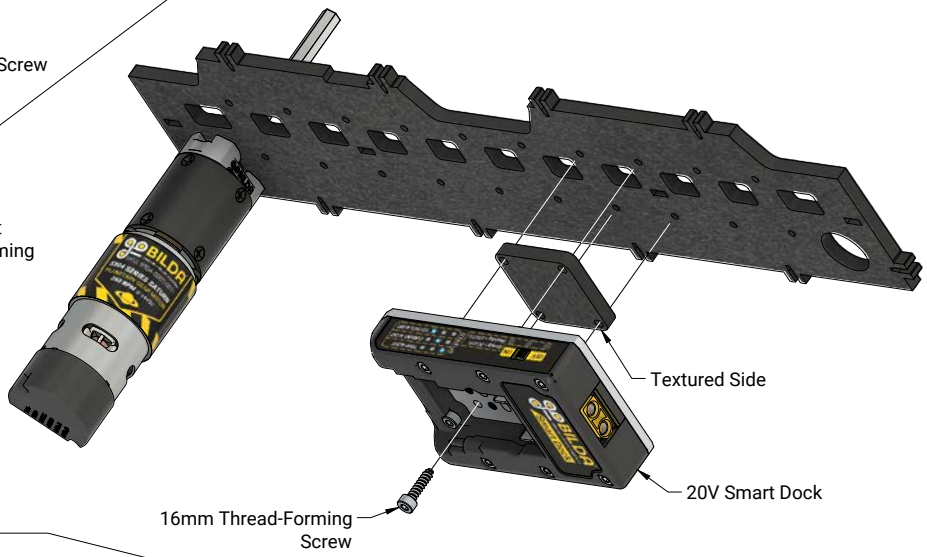

STEP 3:

Slide **one** 8mm ID Bearing and **one** 8mm REX™ Shaft into the Inside Plate as shown.

STEP 4:

Snap **one** Auxiliary Switch into **one** Switch Mount. Route the Auxiliary Switch Wire through the Inside Plate and into the Switch Port on the 20V Smart Dock as shown.

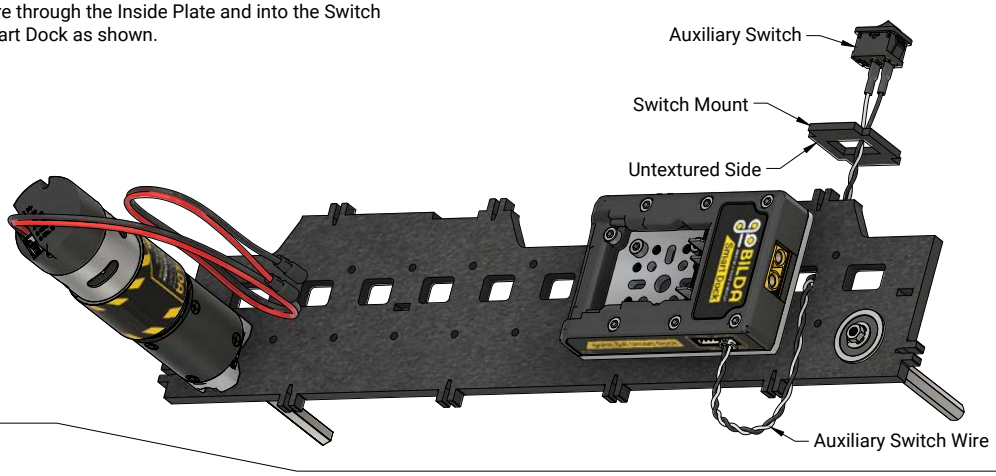

STEP 5:

Plug **one** Y-Harness into the 20V Smart Dock as shown.

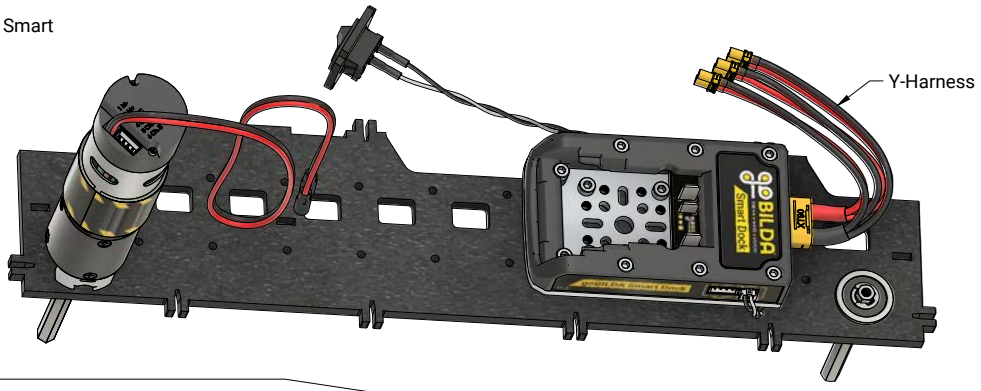

STEP 6:

Attach **one** Element Receiver to **one** Inside Plate using **four** 16mm Thread-Forming Screws as shown.

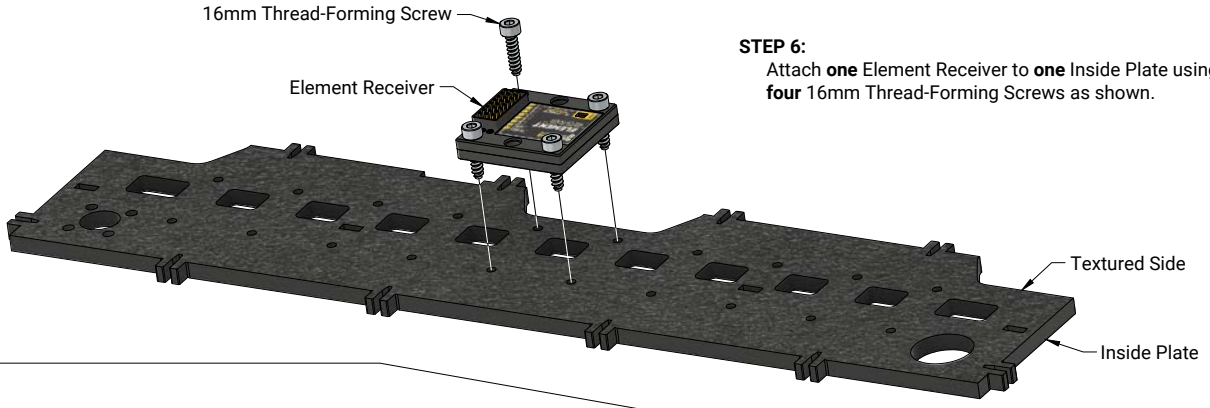

STEP 7:

Attach **one** Motor Controller using **four** 16mm Thread-Forming Screws as shown. Route the Receiver Wire through the Inside Plate and plug it into Port #1 on the Element Receiver.

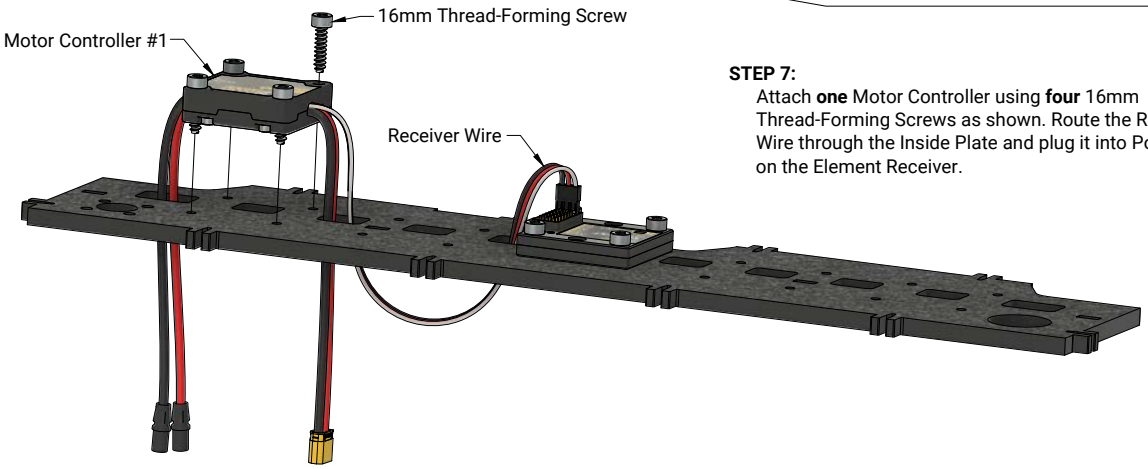

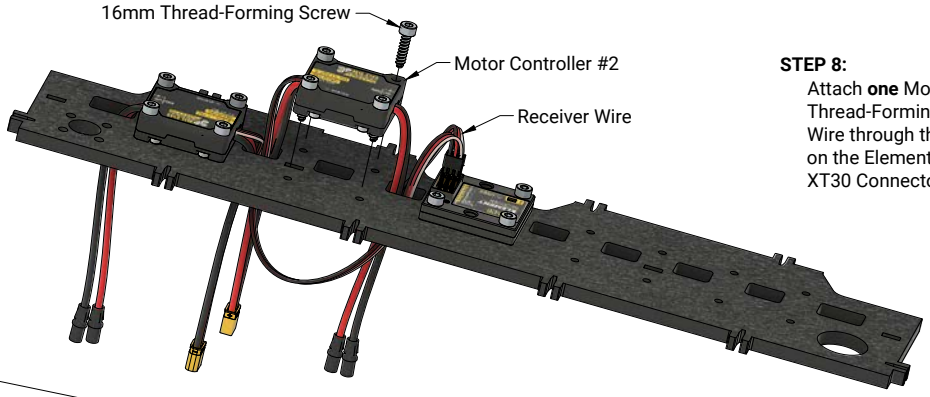

STEP 8:
Attach **one** Motor Controller using **four** 16mm Thread-Forming Screws as shown. Route the Receiver Wire through the Inside Plate and plug it into Port #2 on the Element Receiver. Note the location of the XT30 Connector.

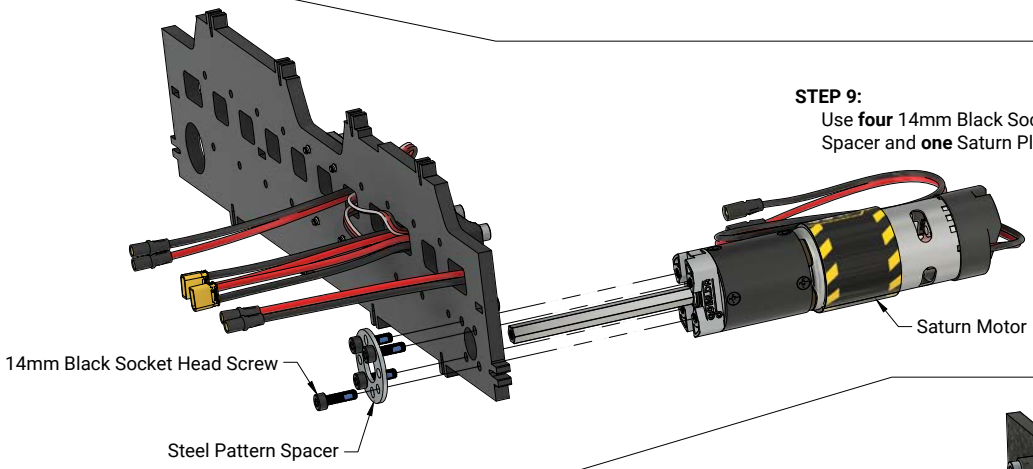

STEP 9:
Use **four** 14mm Black Socket Head Screws to attach **one** Steel Pattern Spacer and **one** Saturn Planetary Gear Motor as shown.

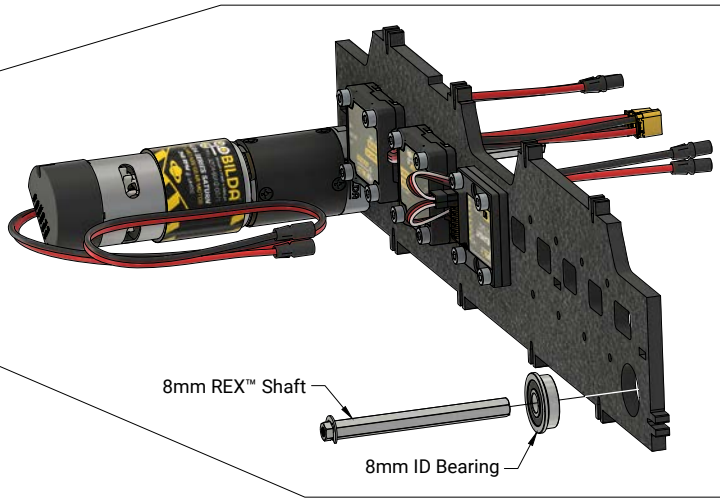

STEP 10:
Slide **one** 8mm ID Bearing and **one** 8mm REX™ Shaft into the Inside Plate as shown.

STEP 11:
Attach **one** Front Plate as shown. Make sure that the "prongs" of the Inside Plate fit snugly in the hole of the Front Plate, then install **one** Truss-Head Screw as shown in **FIGURE 11-A**.

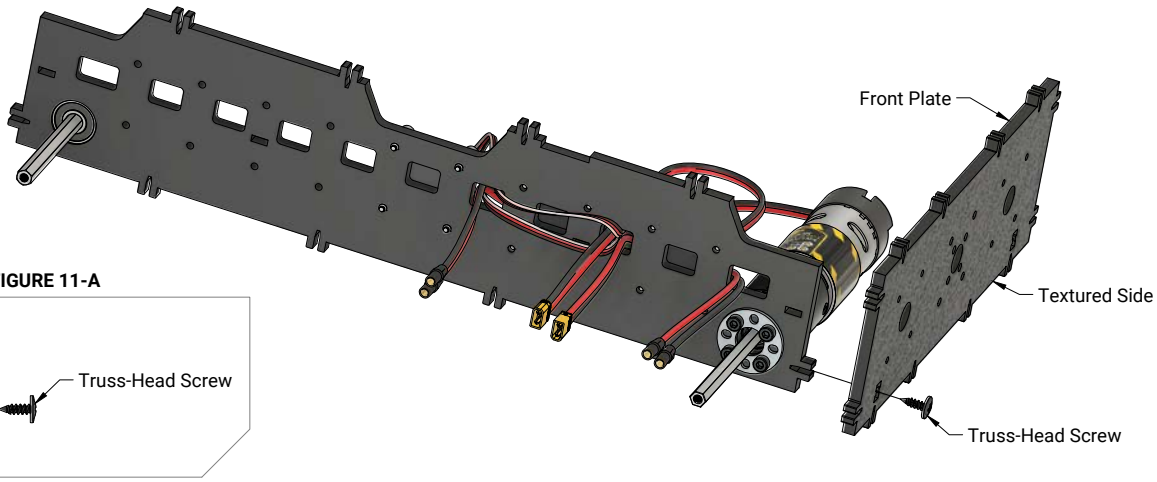

FIGURE 11-A

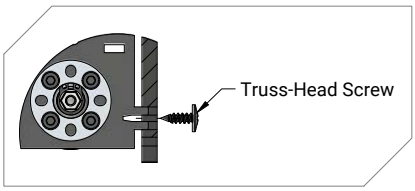

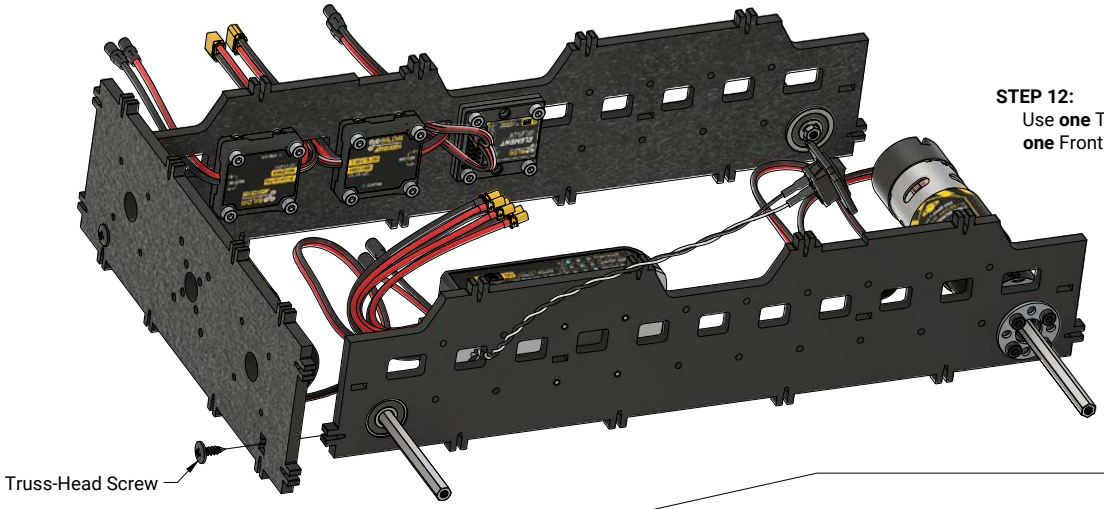

STEP 12:
Use **one** Truss-Head Screw to attach **one** Front Plate as shown.

STEP 13:
Use **two** Truss-Head Screws to attach **one** Front Plate as shown.

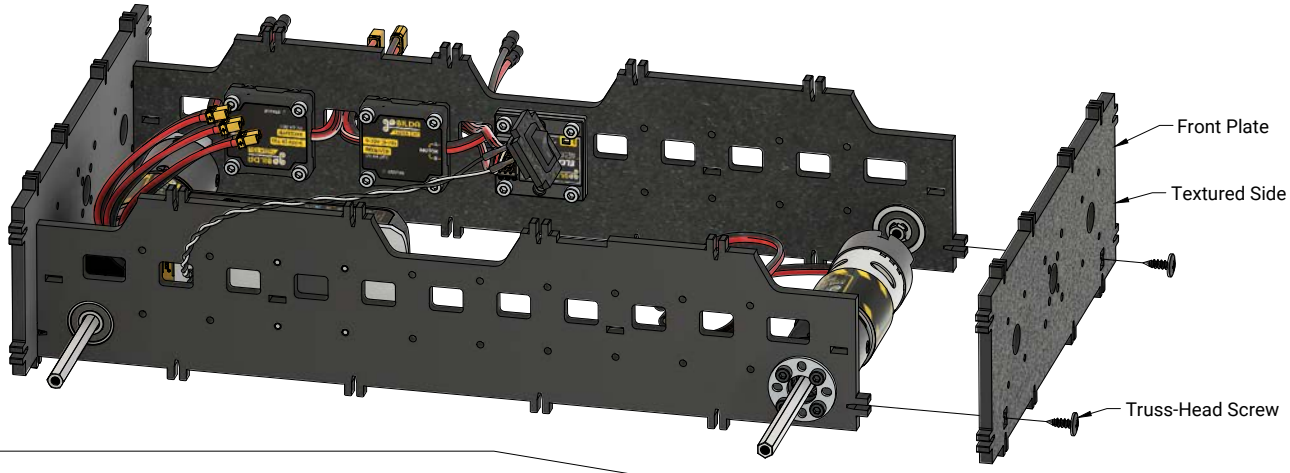

STEP 14:
Attach **four** 8mm REX™ Standoffs to Right Plate using **four** 14mm Black Socket Head Screws and **eight** washers. Attach Track Guard to Right plate as show using **four** 14mm Black Socket Head Screws and **eight** washers.

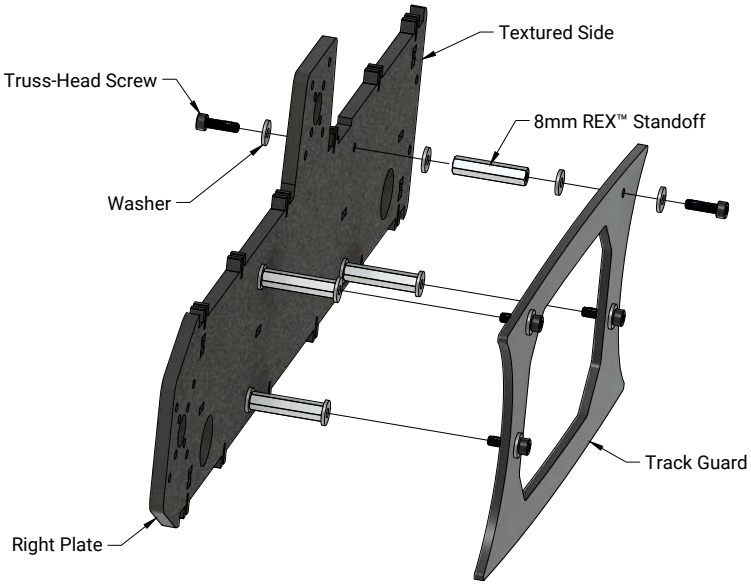

STEP 15:
Use **four** Truss-Head Screws to attach **one** Wire Plate and **one** Right Plate assembly as shown.

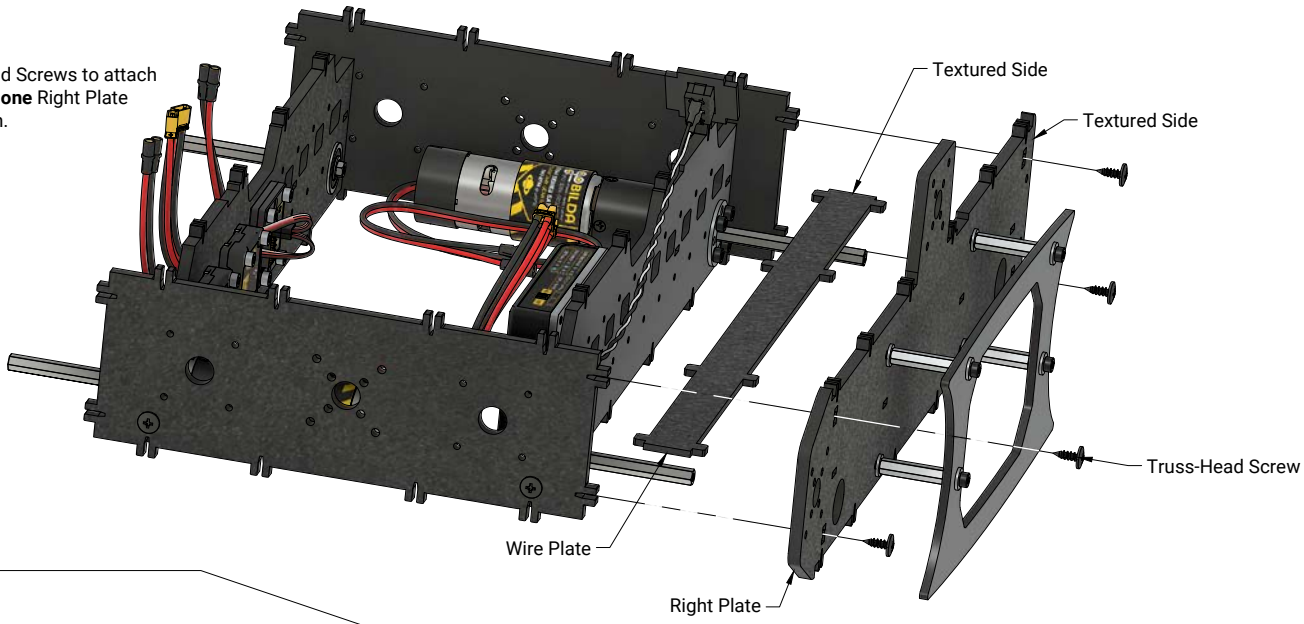

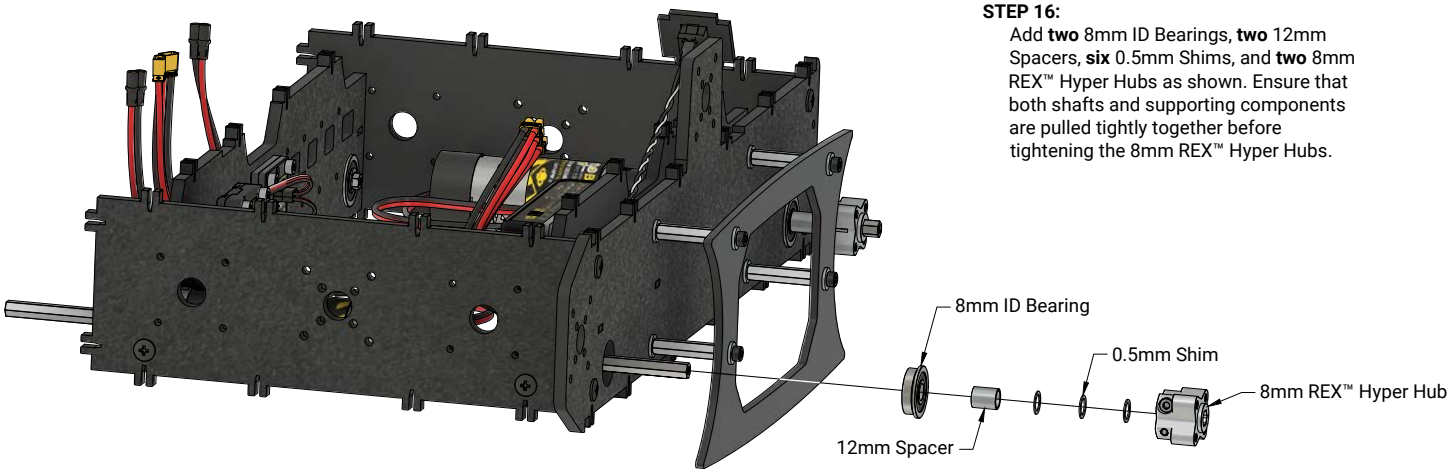

STEP 16:
Add **two** 8mm ID Bearings, **two** 12mm Spacers, **six** 0.5mm Shims, and **two** 8mm REX™ Hyper Hubs as shown. Ensure that both shafts and supporting components are pulled tightly together before tightening the 8mm REX™ Hyper Hubs.

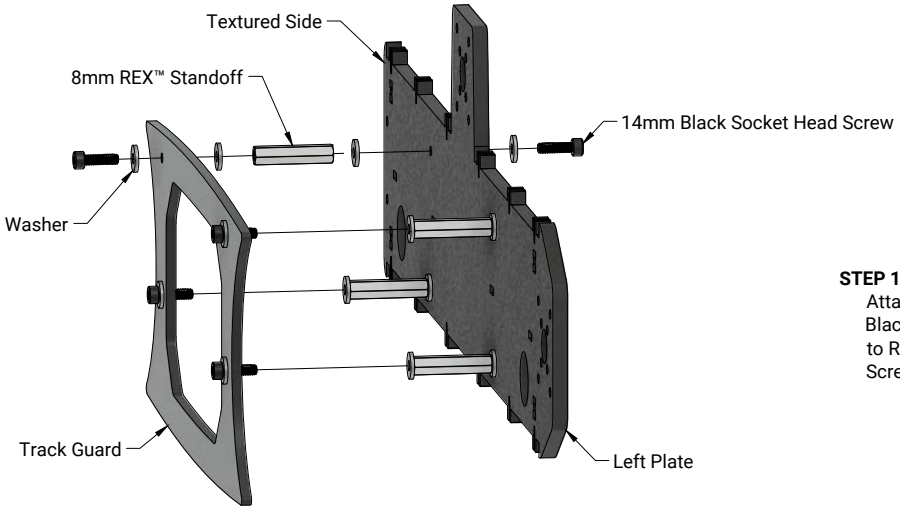

STEP 17:
Attach **four** 8mm REX™ Standoffs to Left Plate using **four** 14mm Black Socket Head Screws and **eight** washers. Attach Track Guard to Right Plate as show using **four** 14mm Black Socket Head Screws and **eight** washers.

STEP 18:

Use **four** Truss-Head Screws to attach **one** Wire Plate and **one** Left Plate as shown.

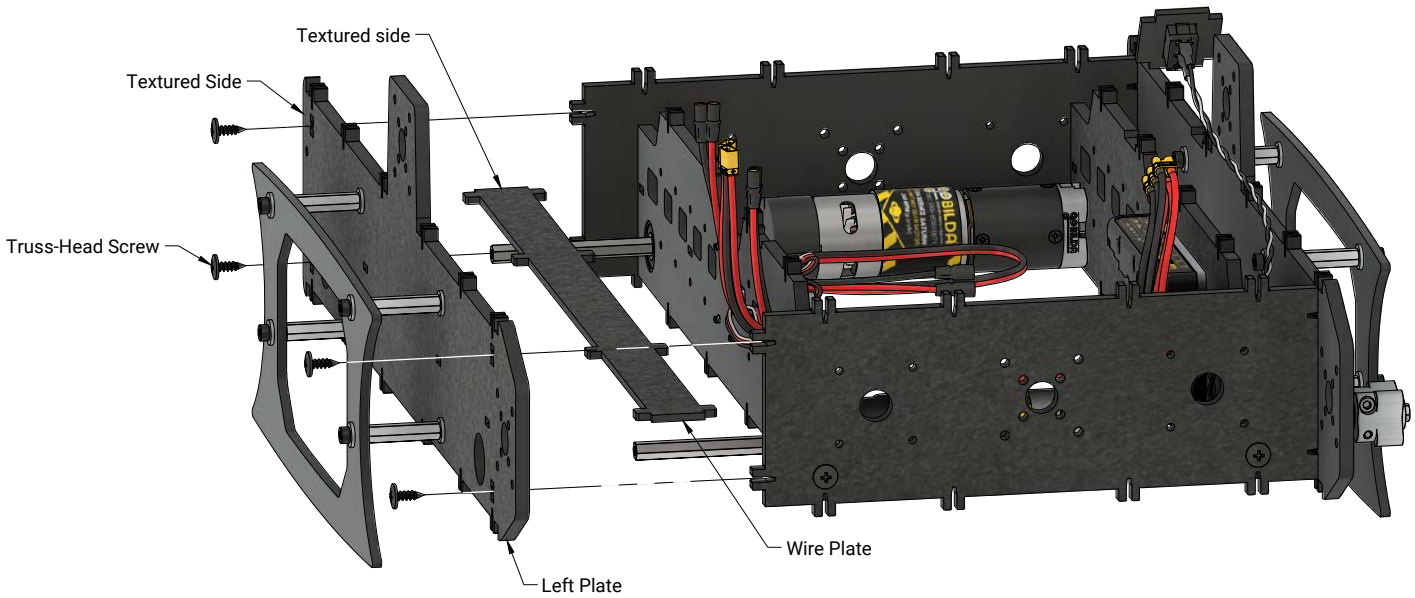

STEP 19:

Add **two** 8mm ID Bearings, **two** 12mm Spacers, **six** 0.5mm Shims, and **two** 8mm REX™ Hyper Hubs as shown. Ensure that both shafts and supporting components are pulled tightly together before tightening the 8mm REX™ Hyper Hubs.

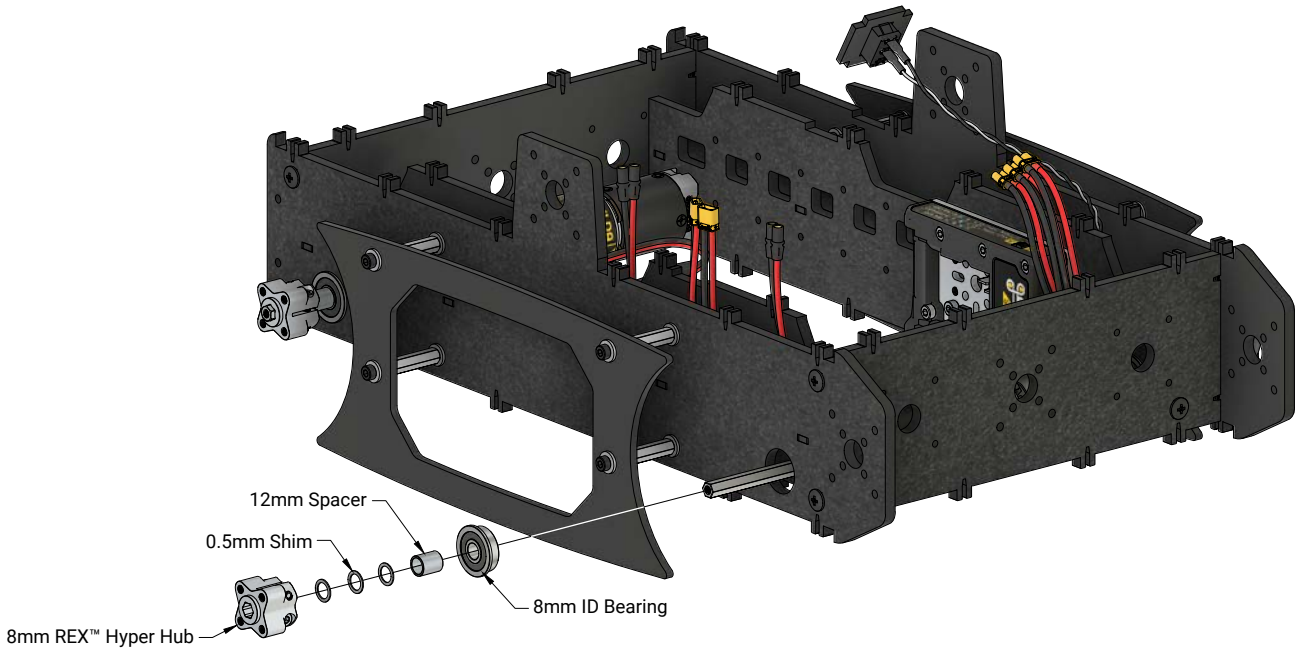

STEP 20:
Attach **one** Bottom Plate using **twenty-eight** Truss-Head Screws as shown.

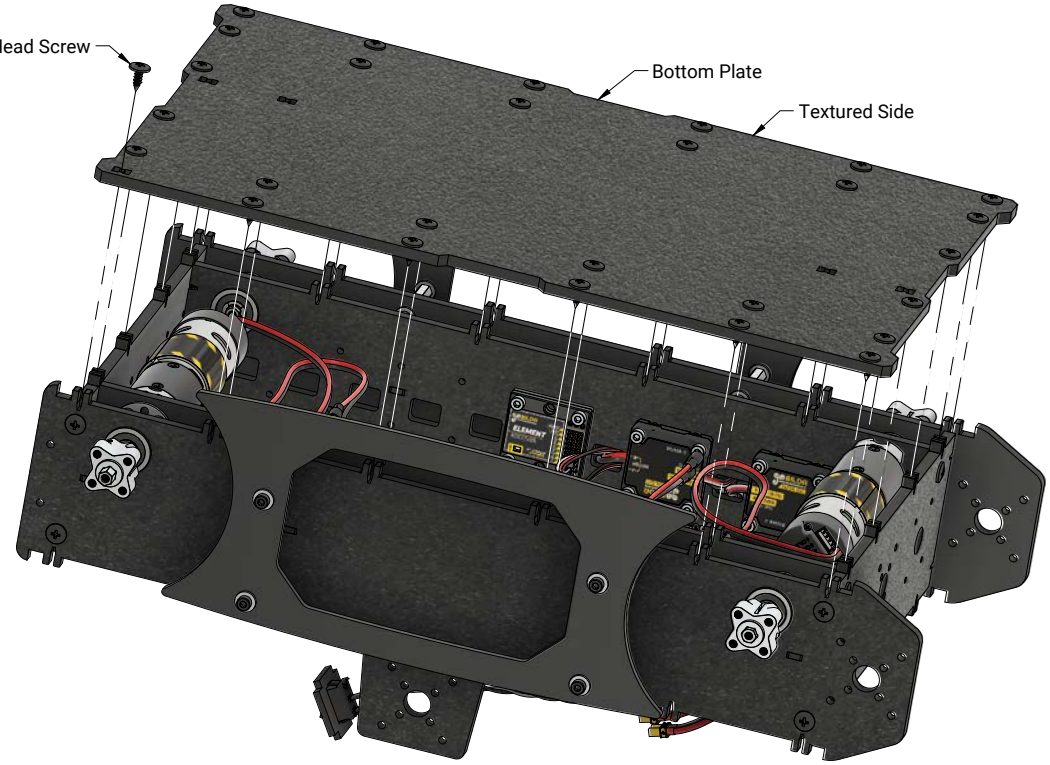

STEP 21:
Attach **two** Motor Straps using **four** Truss-Head Screws as shown.

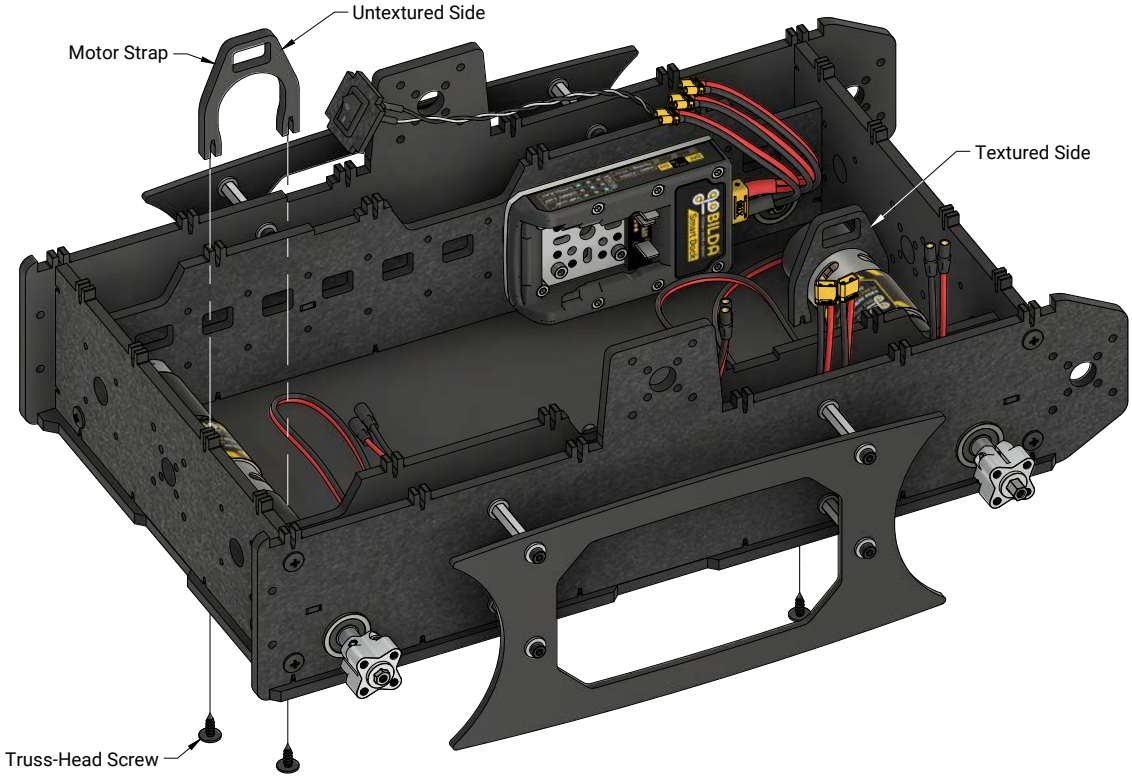

STEP 22:

Route the Y-Harness through the adjacent Motor Strap and plug it into Motor Controller #1 and Motor Controller #2 as shown.

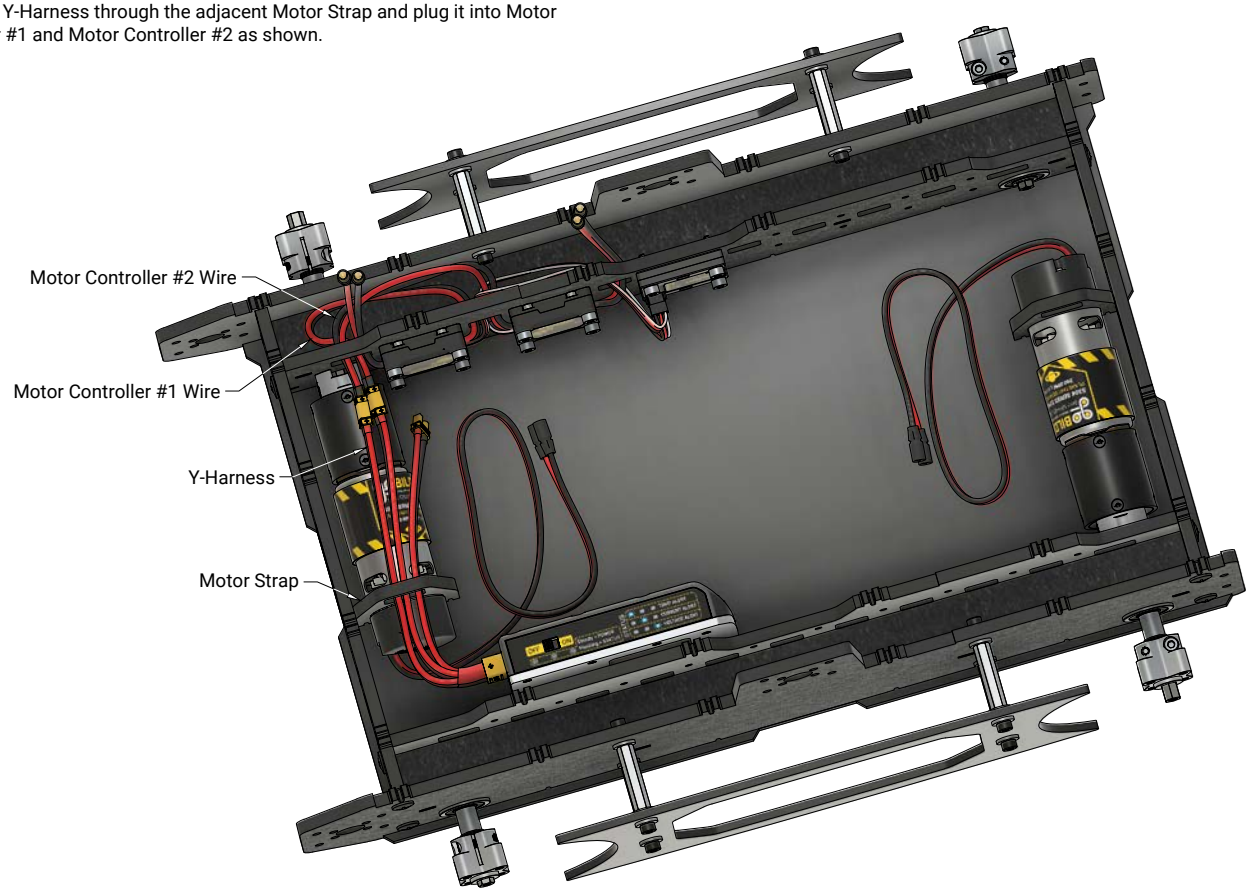

STEP 23:

Route the wire from Saturn Motor #1 through the adjacent Motor Strap and Inside Plate and plug it into the wires from Motor Controller #1 as shown.

Route the wire from Saturn Motor #2 through the Inside Plate and into the wires from Motor Controller #2 as shown.

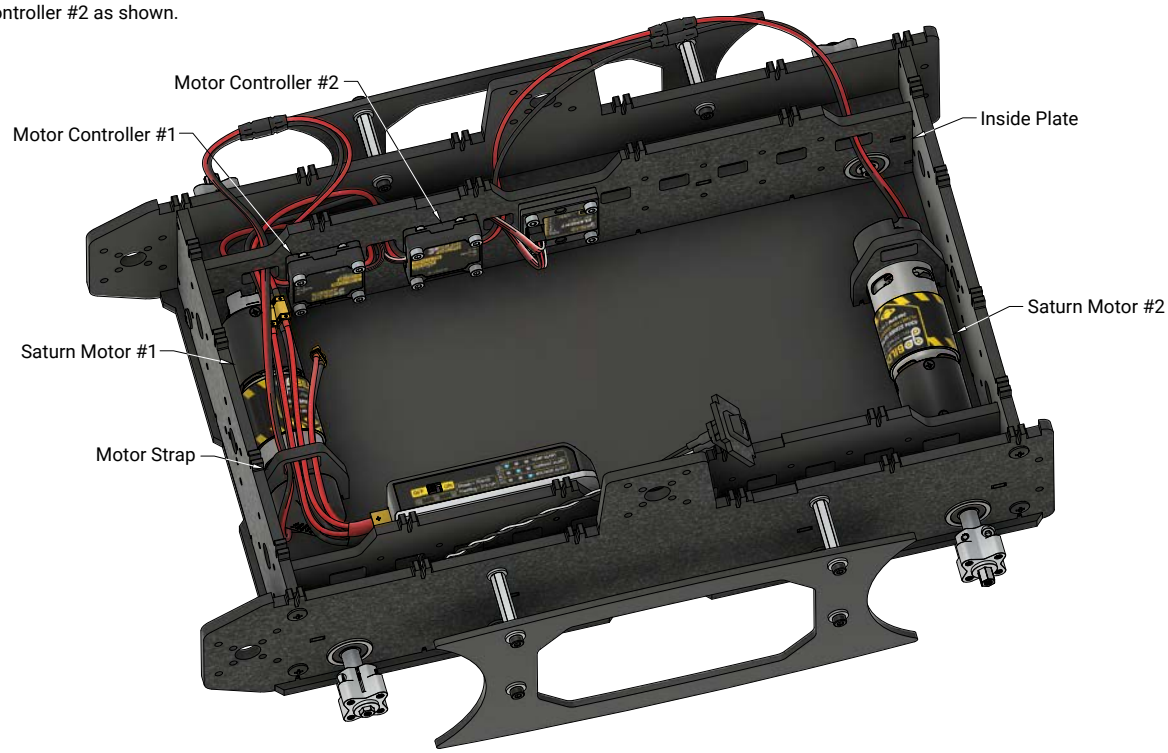

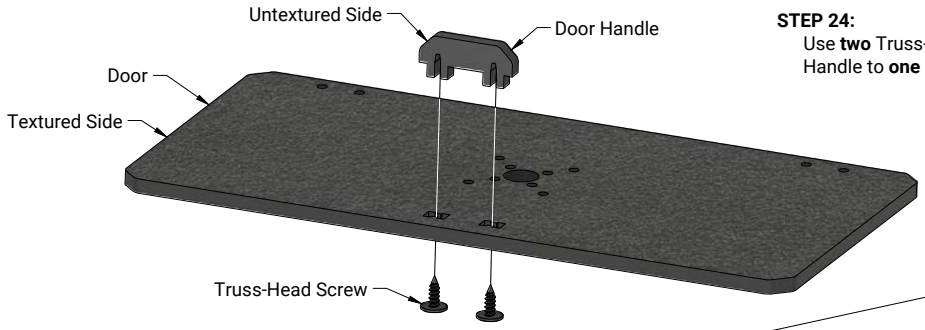

STEP 24:
Use **two** Truss-Head Screws to attach **one** Door Handle to **one** Door as shown.

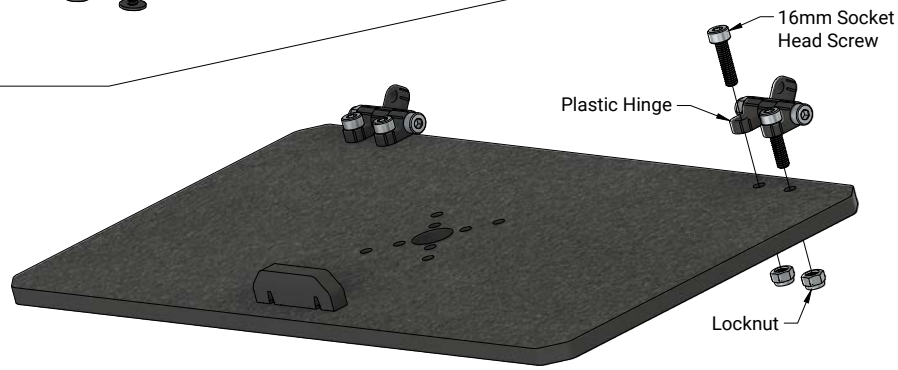

STEP 25:
Assemble **two** Plastic Hinges (**FIGURE 25-A**) and attach them to the Door using **four** 16mm Socket Head Screws and **four** Locknuts as shown.

FIGURE 25-A

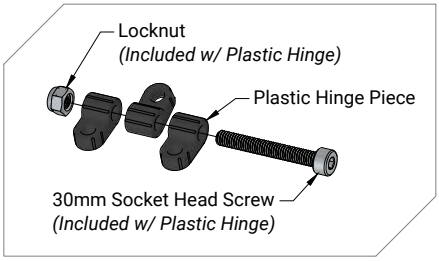

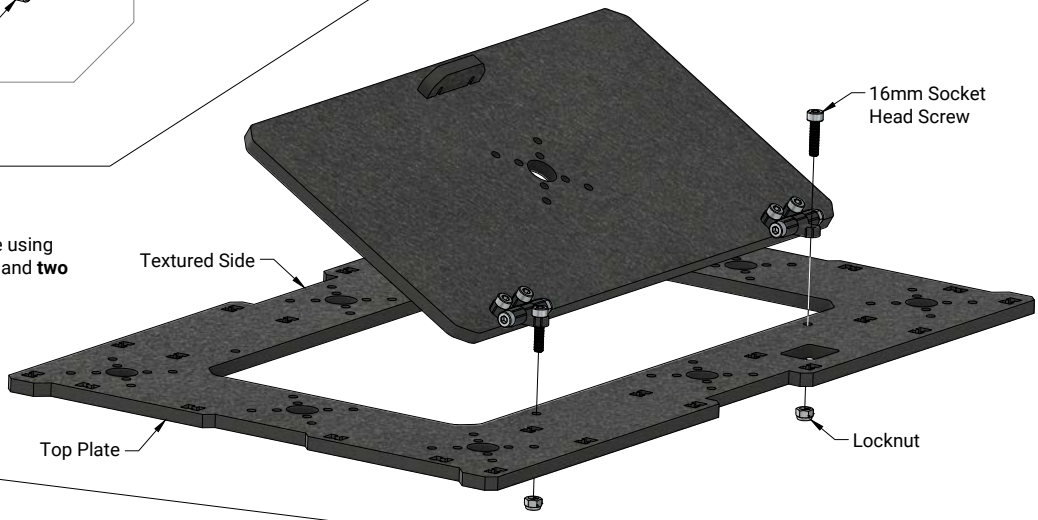

STEP 26:
Attach the Door to **one** Top Plate using **two** 16mm Socket Head Screws and **two** Locknuts as shown.

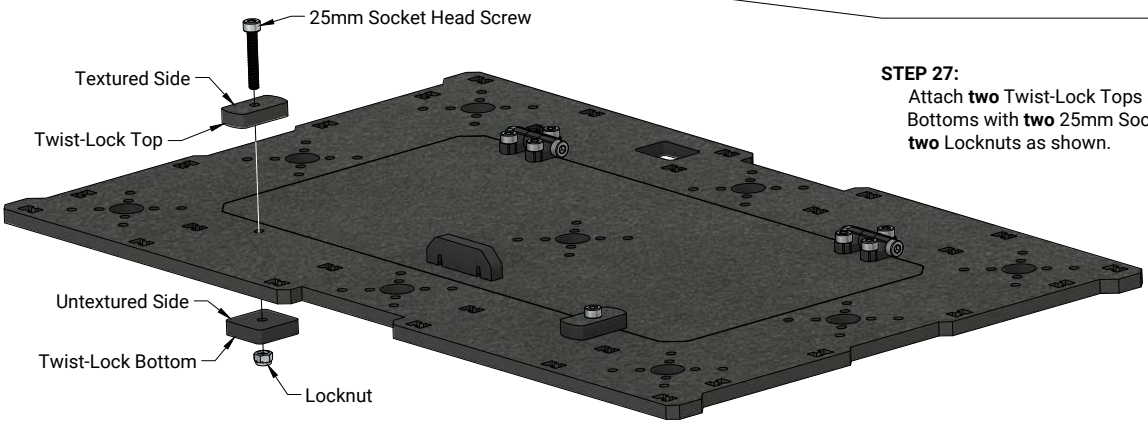

STEP 27:
Attach **two** Twist-Lock Tops and **two** Twist-Lock Bottoms with **two** 25mm Socket Head Screws and **two** Locknuts as shown.

STEP 28:

Position the Auxiliary Switch into the cutout as shown. Use **twenty-eight** Truss-Head Screws to attach the subassembly from **STEP 27** as shown.

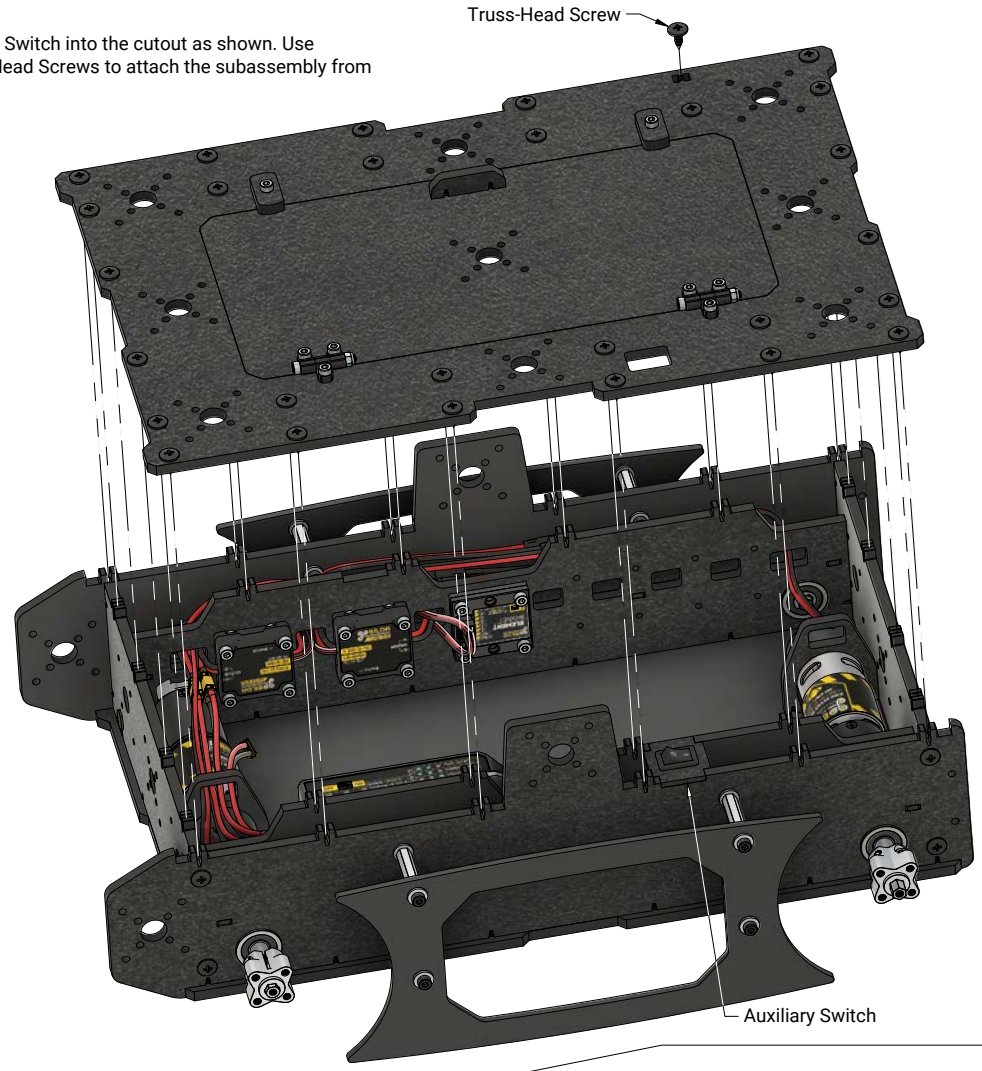

STEP 29:

Use **sixteen** 14mm Black Socket Head Screws to attach **four** Steel Pattern Spacers and **four** Track Drives as shown.

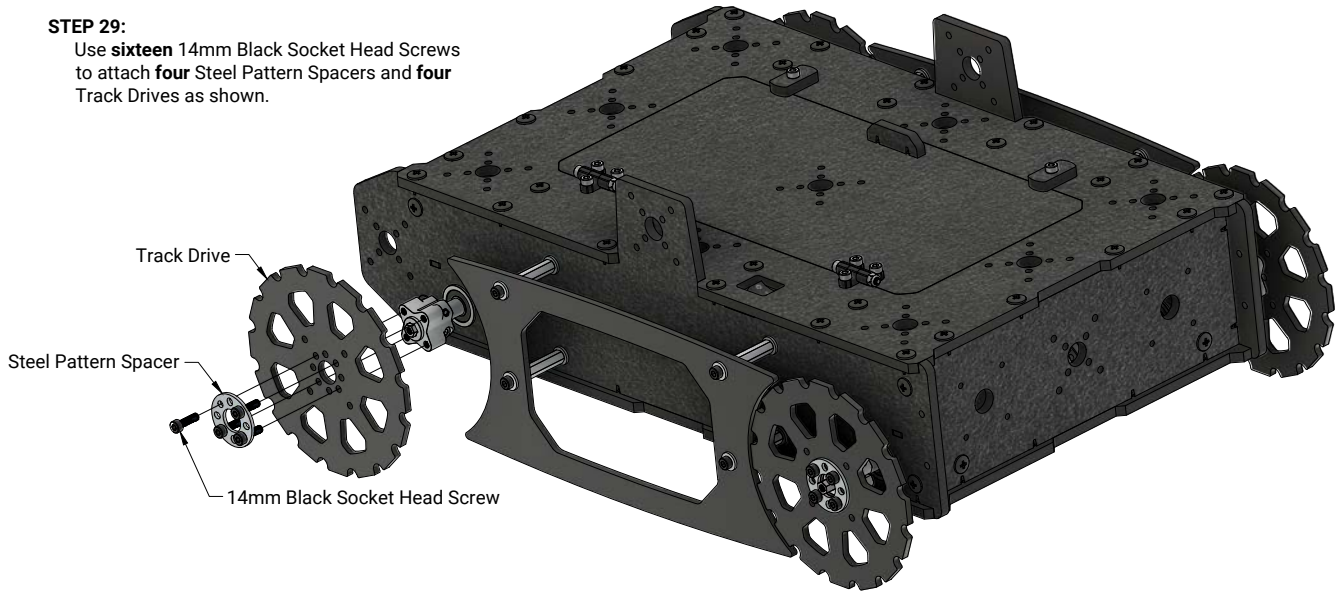

STEP 30:

Attach **eighty-eight** Badlands Tracks as shown, with forty-four on each side.

STEP 31:

Press **fifteen** Debris-Shields into place as shown.

STEP 32:

Pair the Element-6 Transmitter with the Overlander Chassis Kit:

1. Start with the transmitter and receiver powered off.
2. Turn the chassis kit on. The receiver's orange LED will blink slowly.
3. Press and release the Bind button on the receiver with a small screwdriver or pen. The receiver's orange LED will blink quickly.
4. Ensure the left gimbal on the transmitter is all the way down.
5. Turn on the transmitter.
6. The orange LED on the receiver will stop blinking and turn on solid when paired.
7. Ensure that the Element-6 Transmitter is configured as shown in **FIGURE 32-A**.

FIGURE 32-A

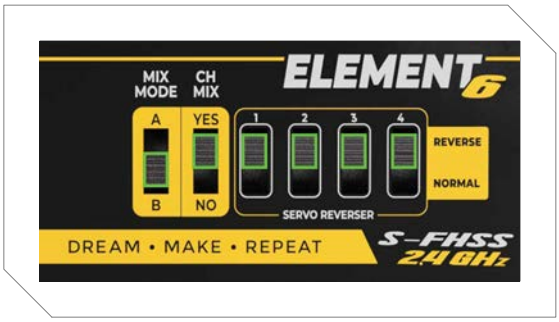

Congratulations!

Your Overlander Chassis Kit is now assembled!
Whether it's exploration, customization, or project ideas no one else had dreamed of before,
your new chassis is ready for it all!