03.07.2026

PNEUMATIC MAGNET IXTUR MRP-170K

Ixtur MRP-170K has lower residual gripping capacity than MRP-170. The other characteristics of MRP-170 and MRP-170K are the same.

- Residual gripping capacity, flat load: maximum 3 kg

- Residual gripping capacity for other shapes:

  MRP-170K's magnetic structure makes residual gripping capacity sensitive to material and geometry of the lifted part. In extreme case, a part up to 8 kg may stay connected to the magnet. This may happen just after the magnet has been turned OFF. When this behavior is critical to the application, the actual parts need to be pretested with the MRP-170K magnet.

Technical Specifications and Instructions

PNEUMATIC MAGNET IXTUR MRP-170

Original User Manual

Content

Introduction and Warnings 3
Technical Specifications 4
Holding Force 5
Installing the Device 8
Using the Ixtur MRP-170 Pneumatic Magnet 9
Maintenance and Inspections 10
Warranty 10
Patents 11
Declaration of Conformity 11

Introduction and Warnings

MRP-170 is a pneumatic magnet meant for attaching ferromagnetic parts in lifting, work holding or automation applications. It is suitable for plates and round objects. The magnet's state, attached or detached, is changed pneumatically. MRP- 170 pneumatic magnet doesn't need compressed air to keep its state. Air pressure is needed only to change the state from attached to detached or vice versa.

- Please read this manual carefully before deployment to ensure safe use of the device.

- This device includes a source of magnetic field. A fluctuating magnetic field is produced during the use in the proximity of the device.

- This device produces a magnetic field that may interfere with medical devices such as metallic implants or cardiac pacemakers. Do not use this device and keep out of close proximity unless you have approval from the manufacturer of the medical device or from your physician.

- Do not disassemble or replace the parts of the device. Only pneumatic connectors are user changeable.
- The device must not be used for lifting or transporting people.
- The permitted holding force must not be exceeded.
- Always pay special attention to the factors that may decrease the holding force of the magnet.
- Do not operate a damaged or malfunctioning device.
- The designer and manufacturer of the system, which this device will be integrated into, should always ensure that the complete system meets the local and national safety regulations.

Technical Specifications

Dimensions:

- Length: 120 mm
- Width 103 mm
- Height: 140 mm (Height including pneumatic connectors 156 mm)
- Weight: 10,7 kg

Capacity:

- Rated holding force: 5,0 kN (S355 S ≥ 25 mm plate)
- Rated holding force: 3,5 kN (S355 cylinder ø ≥ 120 mm)
- Rated lifting capacity for plate with safety factor 3: 170 kg (S355 S ≥ 25 mm)
- Rated lifting capacity for solid round object with safety factor 3: 120 kg (ø ≥ 120 mm)
- Residual holding force flat: maximum 15 kg
- Residual holding force for other shapes:

  Residual gripping capacity of MRP-170 is sensitive to material and geometry of the lifted part. In extreme case, a part up to 30 kg may stay connected to the magnet. This may happen just after the magnet has been turned OFF. When this behavior is critical to the application, the actual parts need to be pretested with the MRP-170 magnet.

Environmental conditions:

- Operating temperature: 0 °C … +50 °C
- Storage temperature: -20 °C … +50 °C
- Humidity 0 % … 90 %
- IP67 (The device is protected from dust and temporary immersion up to 1 m)

Requirements for compressed air:

- Recommended pressure: 6.0 bar
- Functional range: 5.0 … 8.0 bar
- Water separation
- Particle filter ≤ 5µm

Information related to medical implants

- Safety distance for a person with active implanted device is 50 cm of air or other non-magnetic material. The distance is measured from the magnet or magnetic material attached to it.
  - *Maximum static magnetic field of MRP-170 is 295 mT on the gripping surface.*
  - *Interference with active implanted devices, e.g. cardiac pacemakers – Action level for exposure to static magnetic fields is 0,5 mT [Directive 2013/35/EC].*

Holding Force

Holding force and rated lifting capacity of MRP-170 can only be applied when the forces are perpendicular to the magnet's gripping surface.

The following factors affect magnet's holding force:

- Material properties
- Thickness and shape of the load
- Distance between gripping surface and attached load (airgap)
- Object diameter when lifting round part

Holding force and lifting capacity of MRP-170 pneumatic magnet are rated with steel EN S355. Most other steel materials produce lower holding force. Also hardened steel produces lower holding force.

Material's capacity to conduct magnetic field depends on its thickness. A thinner material has weaker capacity compared to a thicker material. Increasing material thickness increases the material's capability to conduct magnetic field until the magnet's specific maximum value is reached. See figure 2: *MRP-170 holding force in proportion to plate thickness.* Figure 2 is made for plate, but same principle is valid also for pipe wall thickness when round parts are lifted.

Any material that separates the magnet's gripping surface from the surface of the load reduces the total magnetic holding force. Reduction can be caused by non-magnetic materials or by materials with weak magnetic qualities, such as, zinc or paint or similar coating, rust, frost or air. The distance between the surfaces caused by materials above is commonly called as airgap.

Surfaces must be clean and the airgap zero to achieve rated holding force. The load surface must also be flat and it must extend over the gripping surface of the device. See figure 3: *MRP-170 holding force in proportion to airgap*.

In case of round parts, the magnet's holding force depends also on part's diameter. Rated holding force can be achieved with ø ≥ 120 mm. See figure 4: *MRP-170 holding force in proportion to round part diameter*. Round part is assumed to be solid material.

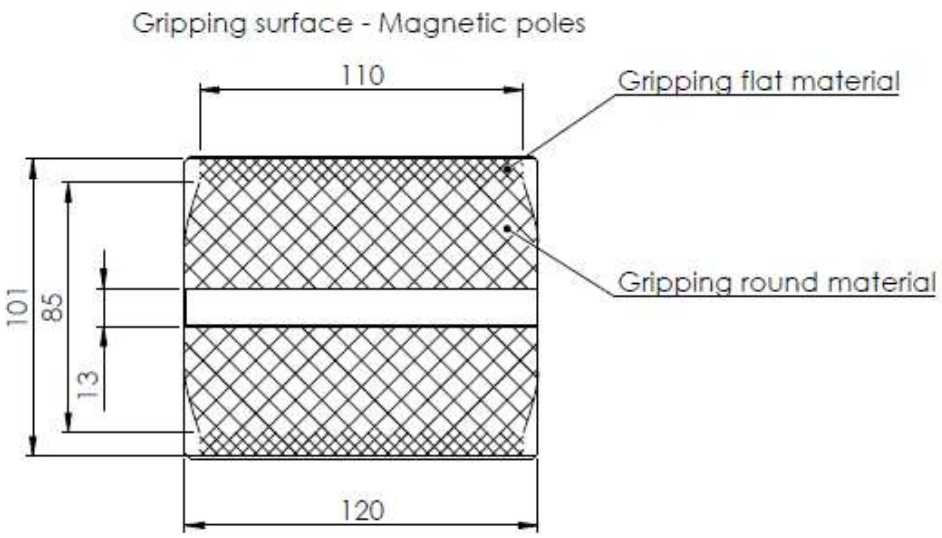

Figure 1. The gripping surface and magnetic poles of MRP-170

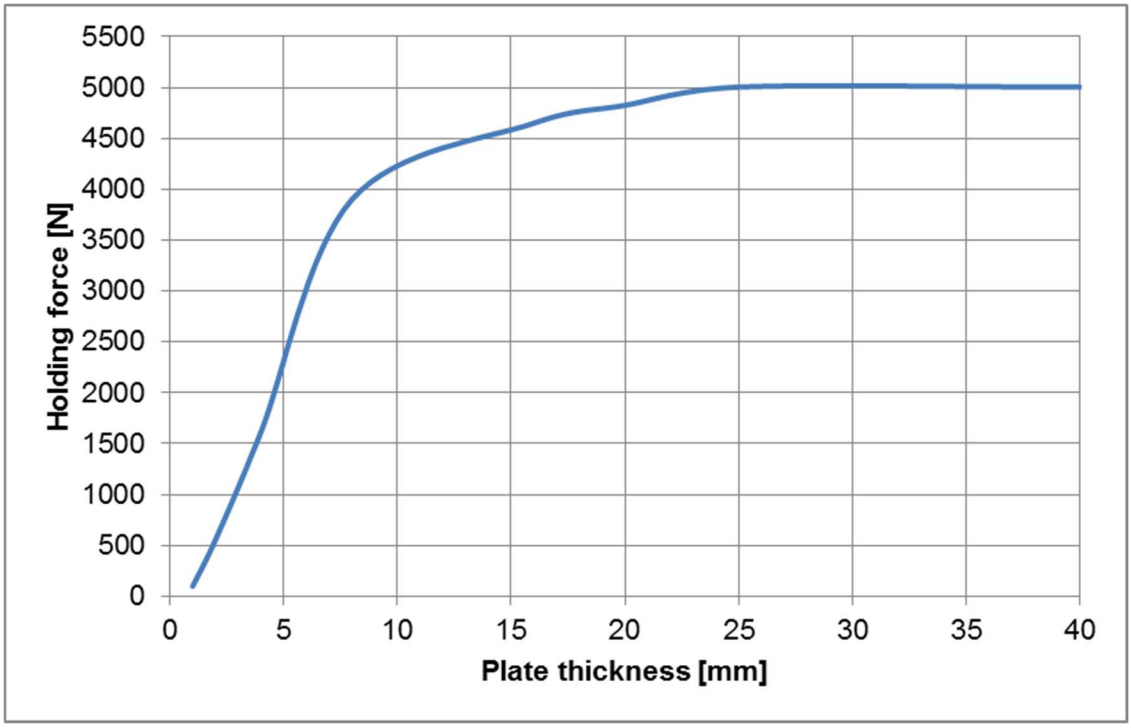

Figure 2. MRP-170 holding force in proportion to plate thickness

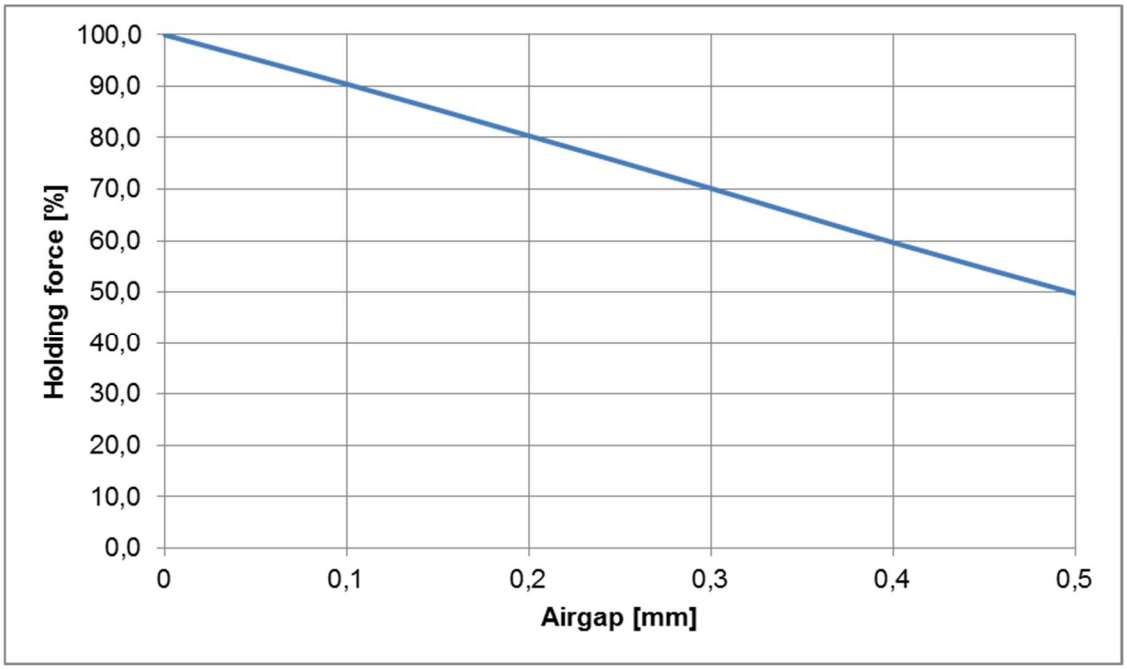

Figure 3. MRP-170 holding force in proportion to airgap

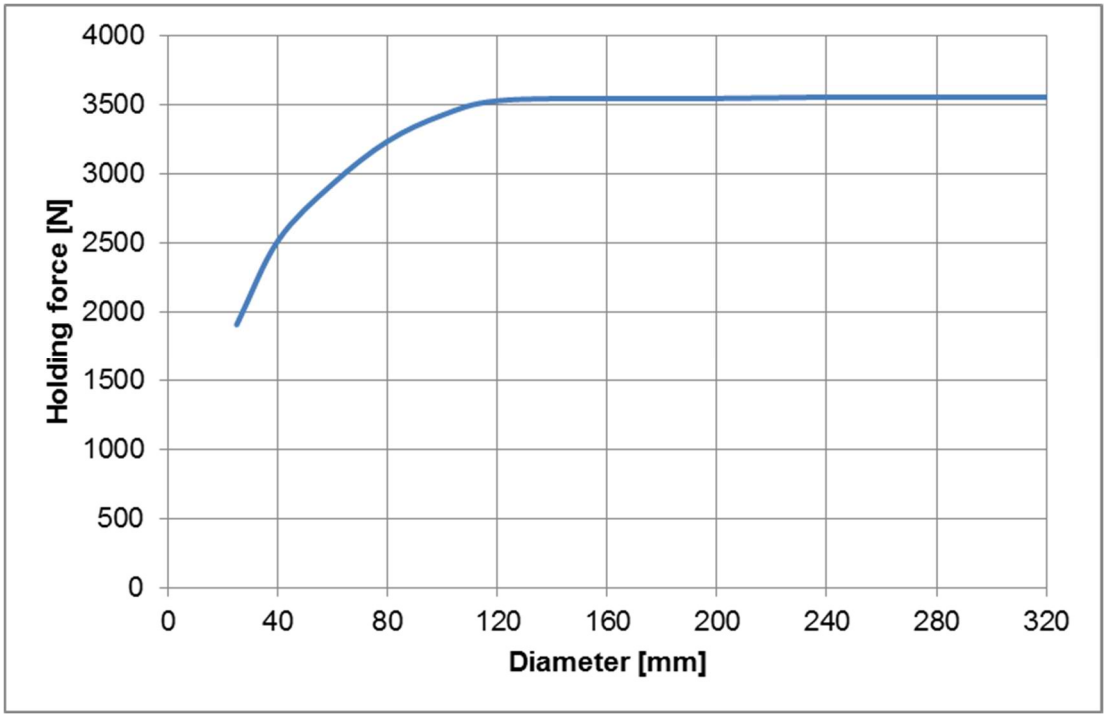

Figure 4. MRP-170 holding force in proportion to diameter of a solid round object

⚠ The holding forces specified in this document are valid for steel EN S355. Most other magnetic materials result in lower holding force.

⚠ The rated lifting capacities are valid for solid cylinders Ø ≥ 120 mm or plates of 25 mm thick. Pipes or thinner plates lead to lower lifting capacity.

⚠ When lifting a piece from a stack, also the piece below the lifted piece can be attached to the magnet.

⚠ The forces caused by acceleration must be considered. For example, sudden moves cause stronger forces than slow and smooth moves. Sudden moves may drop the load.

⚠ Before magnet attachment, make sure that the magnet's gripping surface and the load material surface are clean of foreign materials to minimize the airgap that reduces the holding force.

⚠ Due to residual magnetism, the magnet's lifting surface may contain small magnetic particles or pieces which reduce the holding force.

⚠ The load material surface may bend, which produces an airgap and reduces the holding force. Especially thin materials may cause this effect.

⚠ Do not lift the load higher than necessary. Unnecessary elevation of the load during lifting increases the risk of damage or injury.

Installing the Device

MRP-170 pneumatic magnet has mounting threads at top side. Mounting is done using M12 screws (4 pcs.) according to Figure 4. The pneumatic connections are made with 6.0 mm hose.

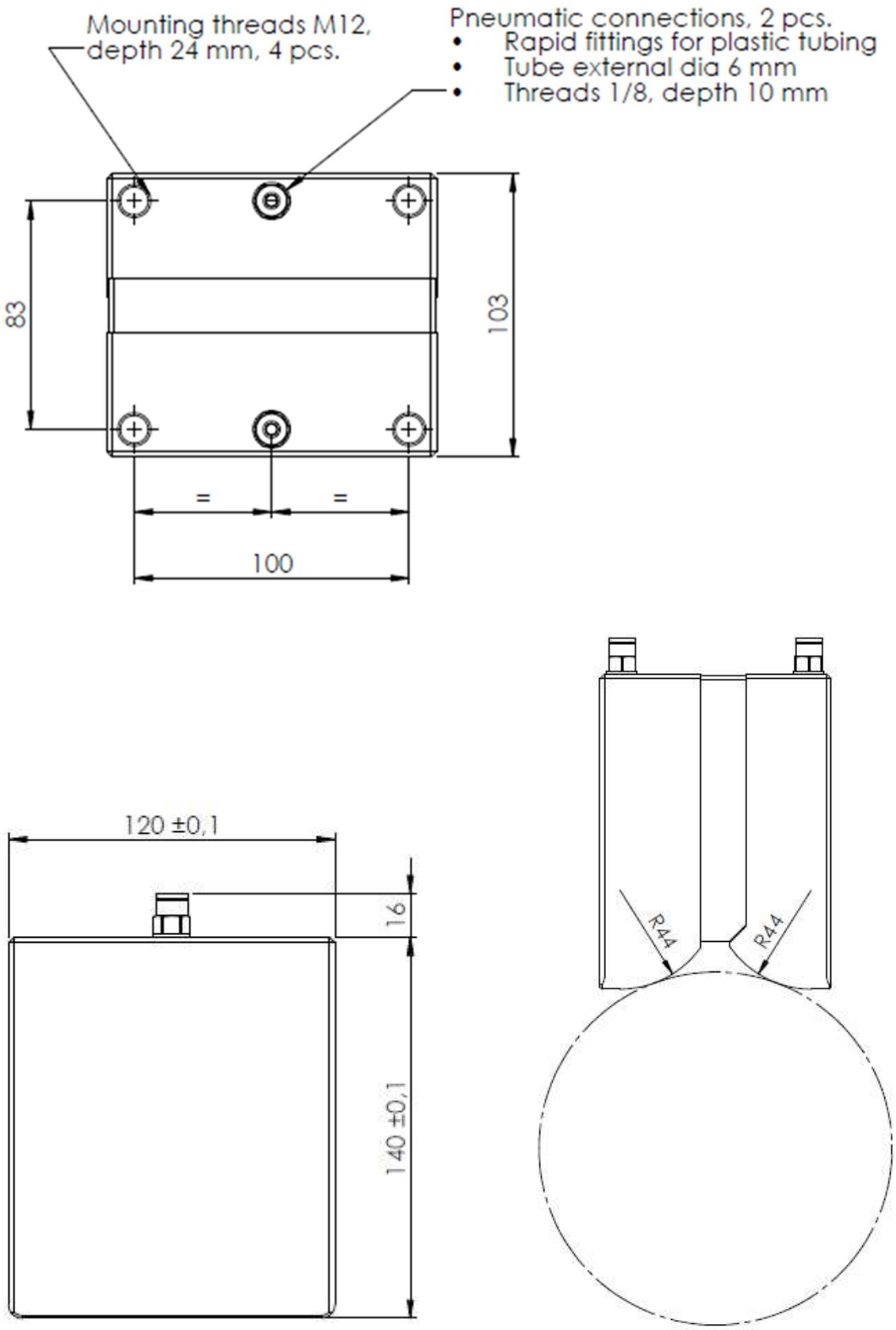

Figure 5. Mounting dimensions of MRP-170

When the MRP-170 magnet is turned ON, a magnetic field is generated between the steel plates of the magnet.

The installation construction around the magnet must not short-circuit the magnetic field. The parts of the installation that connect the MRP-170 steel plates together must be made of non-magnetic material, e.g. aluminum or stainless steel.

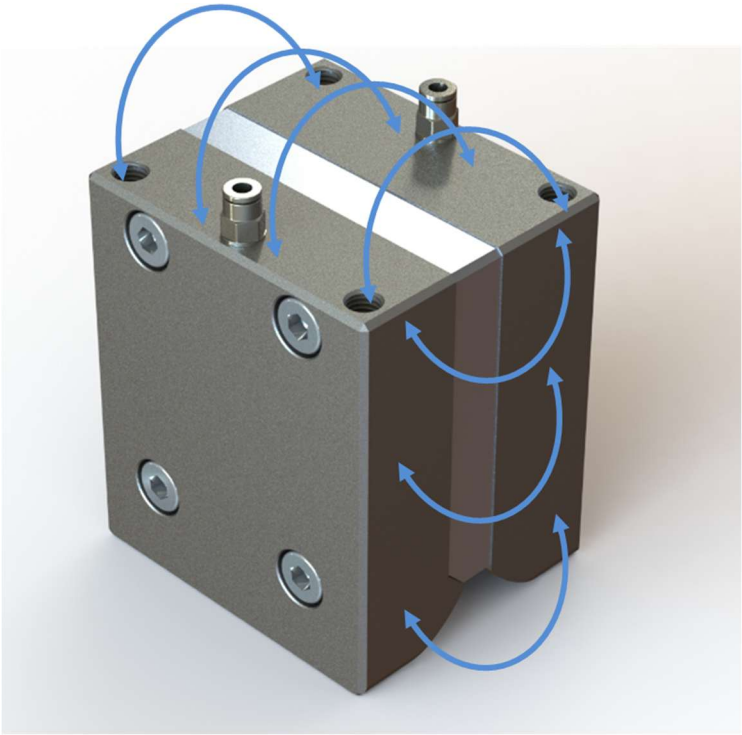

Figure 6. Magnetic field of MRP-170

Using the Ixtur MRP-170 Pneumatic Magnet

The front (logo side) and back steel plates of MRP-170 have a pneumatic connector. When the air pressure in the back side pneumatic connection is 6.0 bars higher than in the front side connection, the magnet is set ON (attach the metal). When the air pressure in the front side pneumatic connection is 6.0 bars higher than in the back side connection, the magnet is set OFF (detach the metal). The same pressure in both air hose contacts keeps the magnet's current state. Even if the pressure is lost, the magnet keeps the current state. For more accurate air pressure information, look at the Technical Specifications of this user's manual.

Figure 7. MRP-170 Pneumatic connectors

The magnetic holding force of MRP-170 magnet weakens, if magnetic field is short circuited outside gripping surface. This may happen if the steel plates are connected to each other with unwanted magnetic material.

If there is a chance that the magnetic field is short circuited by external magnetic part (besides the load) during the gripping of the load, the MRP-170 magnet's steel plates should be shielded by non-magnetic material from such direction(s).

⚠ Short circuiting the magnetic field between the steel plates of MRP-170 reduces the holding force and may cause the lifted object to drop. The load must be the only magnetic material in contact with both plates.

Maintenance and Inspections

MRP-170 pneumatic magnet is maintenance free.

If MRP-170 pneumatic magnet has been dropped or it has been exposed to severe impact, the magnet must be inspected for any damages.

⚠ Do not use the device if you notice any damage or malfunction.

Warranty

The MRP-170 Magnet has a 12 months warranty from the date of delivery. The warranty covers material and manufacturing defects. Warranty does not cover defects caused by a misuse of the device against the regulations and instructions in this manual. The warranty does not cover normal wear and tear.

Patents

U.S. Pat. No. 9,613,738.

Several patent applications are pending related to MRP-170 and Ixtur magnet technology.

Declaration of Conformity

Declaration of incorporation of partly completed machinery

Directive 2006/42/EC

We hereby declare that this partly completed machinery, *Pneumatic Magnet MRP-170*, complies with the essential requirements of the Directive 2006/42/EC on Machinery and the following harmonized standards have been applied and fulfilled:

- EN ISO 12100:2010
- ISO/TR 14121-2:2007
- EN 13155:2003+A2:2009

The technical documents of partly completed machinery is compiled in accordance with section B of Annex VII of Directive 2006/42/EC, that can be transmit, in response to a reasoned request by the national authorities.

Partly completed machinery must not be put into service until the final machinery into which it is to be incorporated has been declared in conformity with the provisions of the Directive 2006/42/CE on Machinery.

03.07.2026

INCORPORATION OF PARTLY COMPLETED MACHINERY

Translation of the original

Directive 2006/42/EC

Ixtur Oy
Varespellontie 6
21500 KAARINA
Finland

Hereby declares that the following partly completed machinery

Description	Pneumatic magnet Gripper
Model	MRP-170
ID number	F11B … I99B

fulfills the following essential requirements of Directive 2006/42/EY:

- Annex I: 1.1.2 a, 1.1.3, 1.1.5, 1.3.2, 1.3.4, 1.5.10

The technical documents of partly completed machinery is compiled in accordance with section B of Annex VII of the Directive 2006/42/EC.

The following harmonized standards have been applied:

- EN 13155:2003+A2:2009
- EN ISO 12100:2010
- ISO/TR 14121-2:2007

All relevant information about the partly completed machinery will be transmitted by post or electronically, in response to a reasoned request by the national authorities.

Partly completed machinery must not be put into service until the final machinery into which it is to be incorporated has been declared in conformity with the provisions of the Directive 2006/42/CE.

Person authorized to compile the technical documentation:
Juho Suominen, Address: Varespellontie 6, FI-21500 Kaarina, Finland

The original document of this declaration is published in Finnish 30.6.2026

Place and date: Kaarina 30.6.2026

Markku Oksanen
Managing Director
Ixtur Oy