03.07.2026

Technical Specifications and Instructions

PNEUMATIC MAGNET IXTUR MRP-31FK

IXTUR OY | VARESPELLONTIE 6, FI-21500 KAARINA FINLAND, WWW.IXTUR.COM

Content

Introduction and Warnings 2
Technical Specifications 3
Holding Force 4
Installing the Device 7
Using the Ixtur MRP-31FK Pneumatic Magnet 8
Maintenance and Inspections 9
Warranty 9
Patents 10
Declaration of Conformity 10

Introduction and Warnings

MRP-31FK is a pneumatic magnet meant for attaching ferromagnetic parts in lifting, work holding or automation applications. It is suitable for plates and other objects. The magnet's state, attached or detached, is changed pneumatically. MRP-31FK pneumatic magnet doesn't need compressed air to keep its state. Air pressure is needed only to change the state from attached to detached or vice versa.

- Please read this manual carefully before deployment to ensure safe use of the device.

- This device includes a source of magnetic field. A fluctuating magnetic field is produced during the use in the proximity of the device.

- This device produces a magnetic field that may interfere with medical devices such as metallic implants or cardiac pacemakers. Do not use this device and keep out of close proximity unless you have approval from the manufacturer of the medical device or from your physician.

- Do not disassemble or replace the parts of the device. Only pneumatic connectors are user changeable.
- The device must not be used for lifting or transporting people.
- The permitted holding force must not be exceeded.
- Always pay special attention to the factors that may decrease the holding force of the magnet.
- Do not operate a damaged or malfunctioning device.
- The designer and manufacturer of the system, which this device will be integrated into, should always ensure that the complete system meets the local and national safety regulations.

Technical Specifications

Dimensions:

- Length: 80.0 mm
- Width 54.8 mm
- Height: 76.0 mm
- Weight: 1.74 kg

Capacity:

- Rated holding force: 910 N (S355 S ≥ 4 mm plate)
- Rated lifting capacity for plate with safety factor 3: 31 kg (S355 S ≥ 4 mm)
- Residual holding capacity: maximum 0.15 kg

  MRP-31FK's magnetic structure (similar to standard lever magnets) makes residual gripping capacity sensitive to material and geometry of the lifted part. In extreme case, a part up to 0.15 kg may stay connected to the magnet. This may happen just after the magnet has been turned OFF. When this behavior is critical to the application, the actual parts need to be pretested with the MRP-31FK magnet.

Environmental conditions:

- Operating temperature: 0 °C … +50 °C
- Storage temperature: -20 °C … +50 °C
- Humidity 0 % … 90 %
- IP67 (The device is protected from dust and temporary immersion up to 1 m)

Requirements for compressed air:

- Recommended pressure: 6.0 bar
- Functional range: 5.0 … 8.0 bar
- Water separation
- Particle filter ≤ 5µm

Information related to medical implants

- Safety distance for a person with active implanted device is 50 cm of air or other non-magnetic material. The distance is measured from the magnet or magnetic material attached to it.
  - *Maximum static magnetic field of MRP-31FK is 200 mT on the gripping surface.*
  - *Interference with active implanted devices, e.g. cardiac pacemakers – Action level for exposure to static magnetic fields is 0,5 mT [Directive 2013/35/EC].*

Holding Force

Holding force and rated lifting capacity of MRP-31FK can only be applied when the forces are perpendicular to the magnet's gripping surface.

The following factors affect magnet's holding force:

- Material properties
- Thickness of the load
- Distance between gripping surface and attached load (airgap)

Holding force and lifting capacity of MRP-31FK pneumatic magnet are rated with steel EN S355. Most other steel materials produce lower holding force. Also hardened steel produces lower holding force.

Material's capacity to conduct magnetic field depends on its thickness. A thinner material has weaker capacity compared to a thicker material. Increasing material thickness increases the material's capability to conduct magnetic field until the magnet's specific maximum value is reached. See figure 2: *MRP-31FK holding force in proportion to plate thickness.*

Any material that separates the magnet's gripping surface from the surface of the load reduces the total magnetic holding force. Reduction can be caused by non-magnetic materials or by materials with weak magnetic qualities, such as, zinc or paint or similar coating, rust, frost or air. The distance between the surfaces caused by materials above is commonly called as airgap.

Surfaces must be clean and the airgap zero to achieve rated holding force. The load surface must also be flat and it must occupy the gripping surface of the device completely. See figure 3: *MRP-31FK holding force in proportion to airgap*.

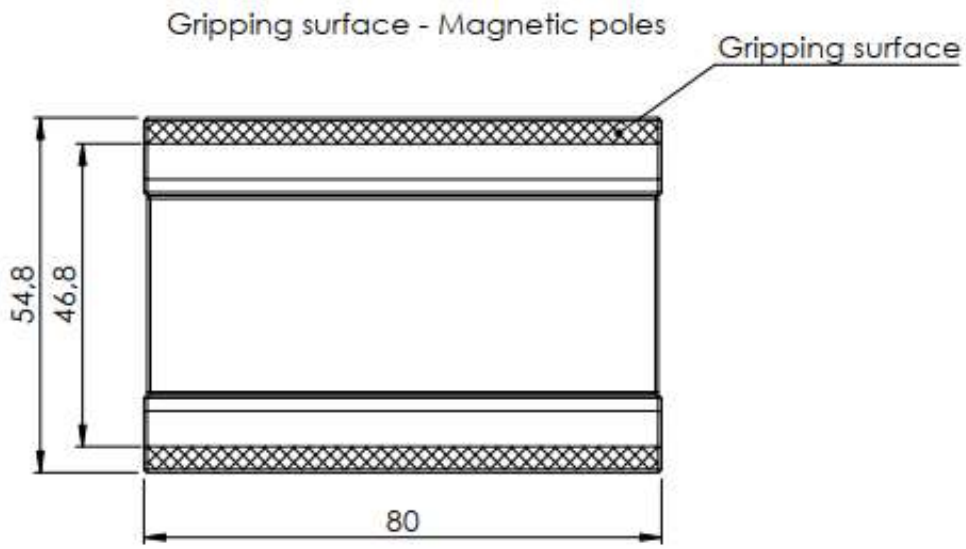

Figure 1. The gripping surface and magnetic poles of MRP-31FK.

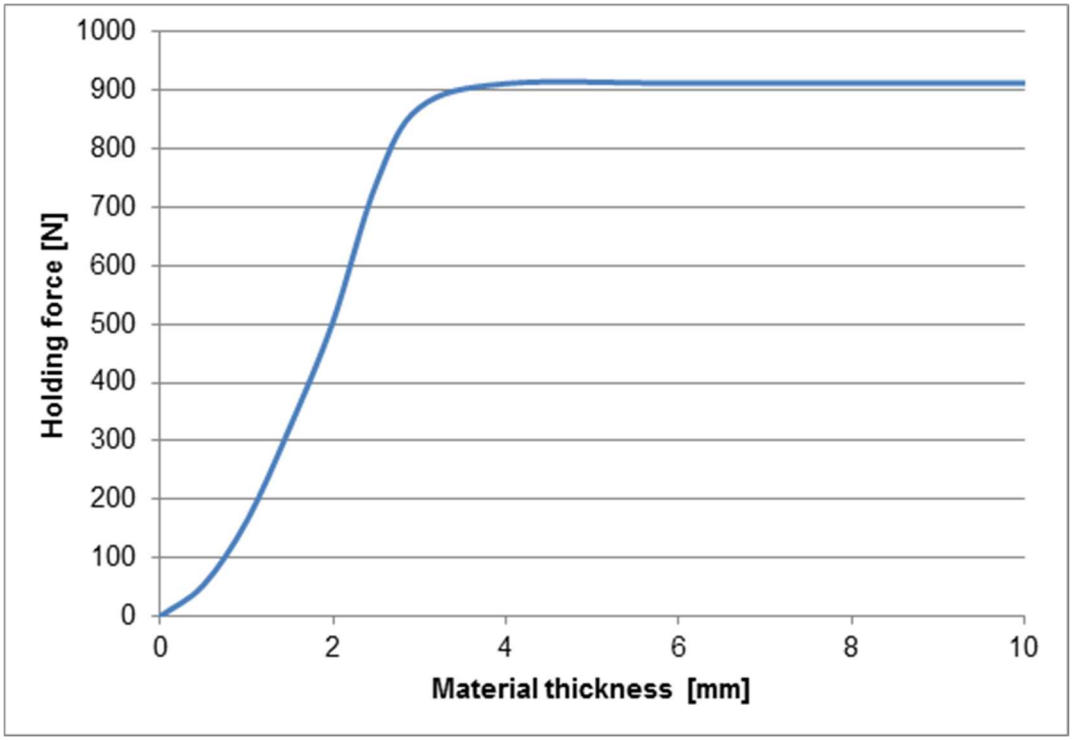

Figure 2. MRP-31FK holding force in proportion to plate thickness

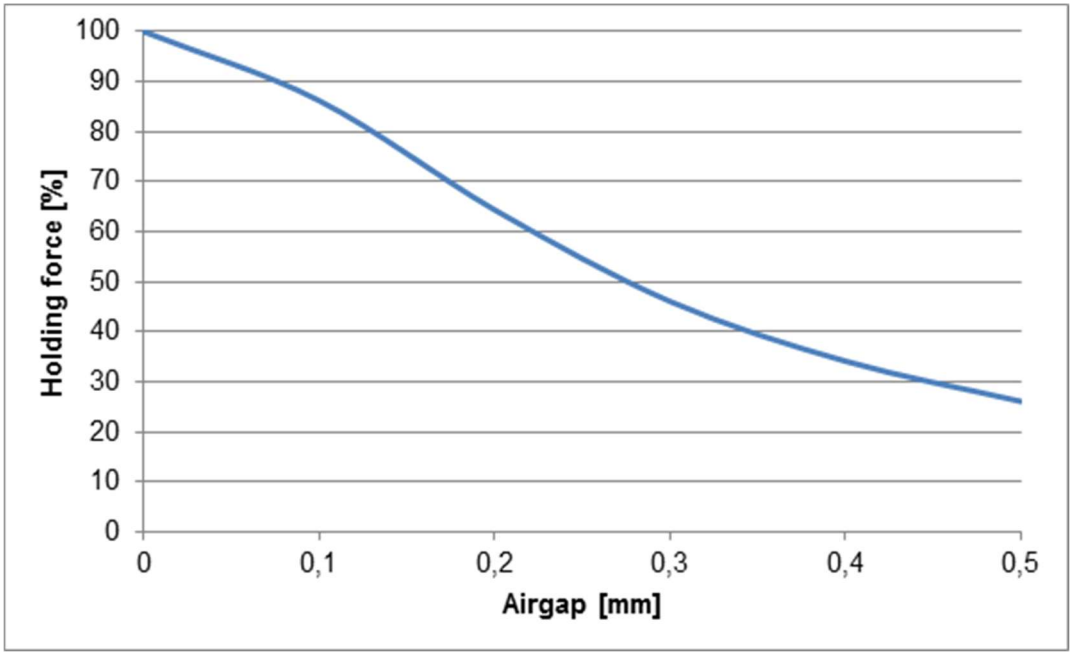

Figure 3. MRP-31FK holding force in proportion to airgap

⚠ The holding forces specified in this document are valid for steel EN S355. Most other magnetic materials result in lower holding force.

⚠ The rated lifting capacities are valid for plates of 4 mm thick. Thinner plates lead to lower lifting capacity.

⚠ When lifting a piece from a stack, also the piece below the lifted piece can be attached to the magnet.

⚠ The forces caused by acceleration must be considered. For example, sudden moves cause stronger forces than slow and smooth moves. Sudden moves may drop the load.

⚠ Before magnet attachment, make sure that the magnet's gripping surface and the load material surface are clean of foreign materials to minimize the airgap that reduces the holding force.

⚠ Due to residual magnetism, the magnet's lifting surface may contain small magnetic particles or pieces which reduce the holding force.

⚠ The load material surface may bend, which produces an airgap and reduces the holding force. Especially thin materials may cause this effect.

⚠ Do not lift the load higher than necessary. Unnecessary elevation of the load during lifting increases the risk of damage or injury.

Installing the Device

MRP-31FK pneumatic magnet can be mounted either from side(s) or from top. Mounting is done using M6 screws (4 pcs.) according to Figure 5. The pneumatic connections are made with 4.0 mm hose.

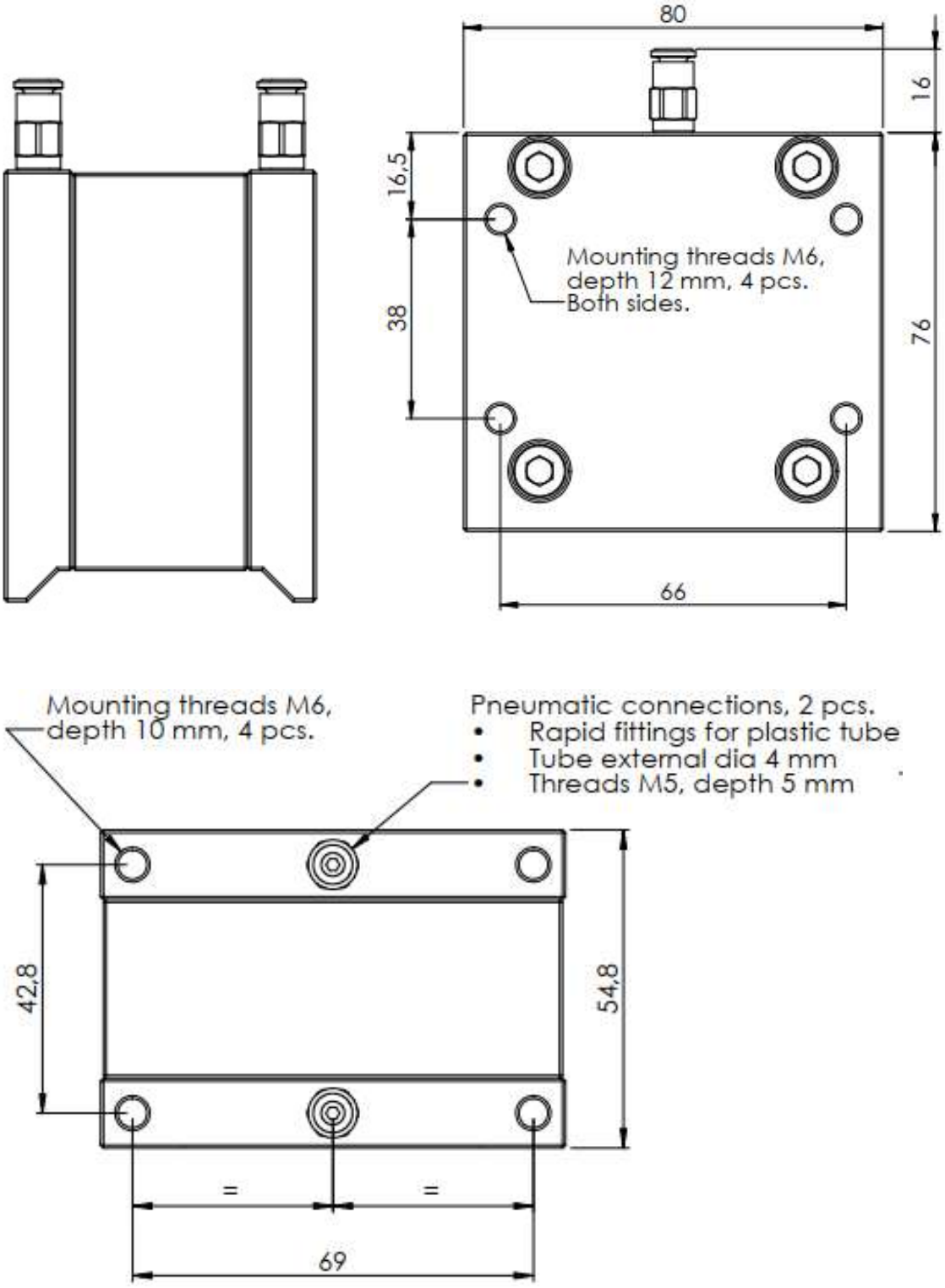

Figure 5. Mounting dimensions of MRP-31FK.

When the MRP-31FK magnet is turned ON, a magnetic field is generated between the steel plates of the magnet.

The installation construction around the magnet must not short-circuit the magnetic field. The parts of the installation that connect the MRP-31FK steel plates together must be made of non-magnetic material, e.g. aluminum or stainless steel.

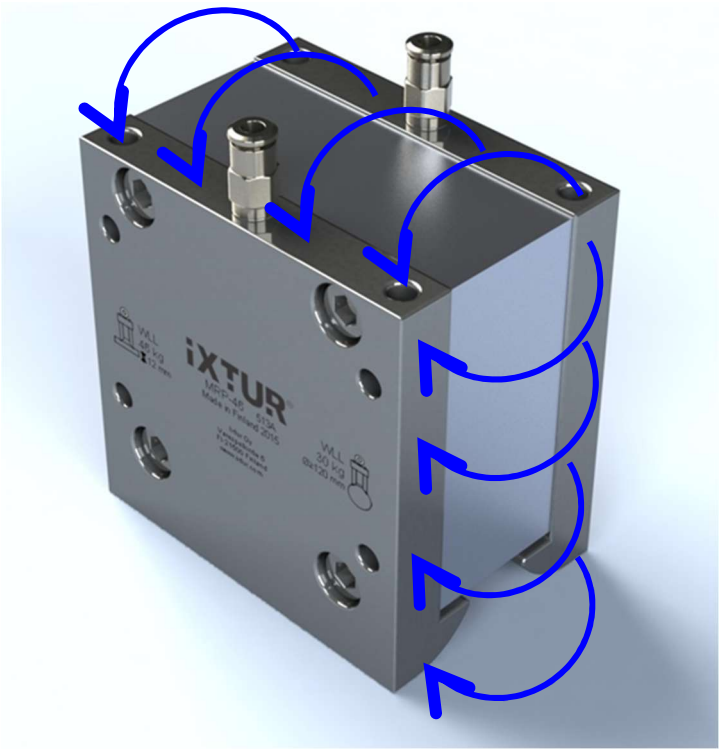

Figure 6. Magnetic field of MRP-31FK.

Using the Ixtur MRP-31FK Pneumatic Magnet

The front (logo side) and back steel plates of MRP-31FK have a pneumatic connector. When the air pressure in the back side pneumatic connection is 6.0 bars higher than in the front side connection, the magnet is set ON (attach the metal). When the air pressure in the front side pneumatic connection is 6.0 bars higher than in the back side connection, the magnet is set OFF (detach the metal). The same pressure in both air hose contacts keeps the magnet's current state. Even if the pressure is lost, the magnet keeps the current state. For more accurate air pressure information, look at the Technical Specifications of this user's manual.

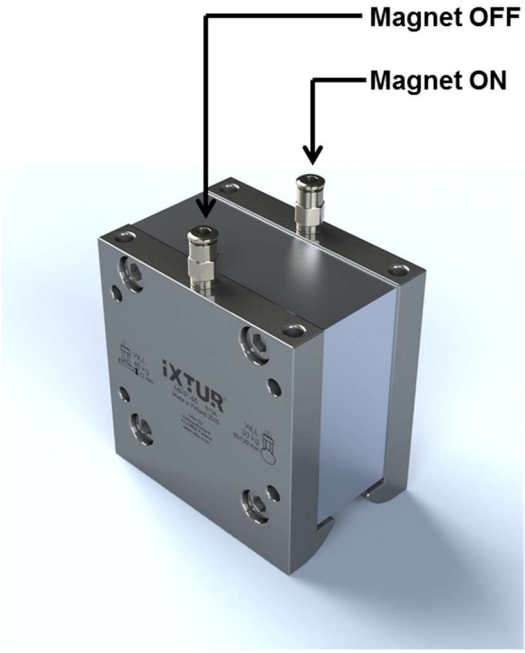

Figure 7. MRP-31FK Pneumatic connectors

⚠ Short circuiting the magnetic field between the steel plates of MRP-31FK reduces the holding force and may cause the lifted object to drop. The load must be the only magnetic material in contact with both plates.

Maintenance and Inspections

MRP-31FK pneumatic magnet is maintenance free.

If MRP-31FK pneumatic magnet has been dropped or it has been exposed to severe impact, the magnet must be inspected for any damages.

⚠ Do not use the device if you notice any damage or malfunction.

Warranty

The MRP-31FK Magnet has a 12 months warranty from the date of delivery. The warranty covers material and manufacturing defects. Warranty does not cover defects caused by a misuse of the device against the regulations and instructions in this manual. The warranty does not cover normal wear and tear.

Patents

U.S. Pat. No. 9,613,738.

Several patent applications are pending related to MRP-31FK and Ixtur magnet technology.

Declaration of Conformity

Declaration of incorporation of partly completed machinery

Directive 2006/42/EC

We hereby declare that this partly completed machinery, *Pneumatic Magnet MRP-31FK*, complies with the essential requirements of the Directive 2006/42/EC on Machinery and the following harmonized standards have been applied and fulfilled:

- EN ISO 12100:2010
- ISO/TR 14121-2:2007
- EN 13155:2003+A2:2009

The technical documents of partly completed machinery is compiled in accordance with section B of Annex VII of Directive 2006/42/EC, that can be transmit, in response to a reasoned request by the national authorities.

Partly completed machinery must not be put into service until the final machinery into which it is to be incorporated has been declared in conformity with the provisions of the Directive 2006/42/CE on Machinery.

03.07.2026

INCORPORATION OF PARTLY COMPLETED MACHINERY

Translation of the original

Directive 2006/42/EC

Ixtur Oy
Varespellontie 6
21500 KAARINA
Finland

Hereby declares that the following partly completed machinery

Description	Pneumatic Magnet
Model	MRP-31FK
ID number	G11A … I99B

fulfills the following essential requirements of Directive 2006/42/EY:

- Annex I: 1.1.2 a, 1.1.3, 1.1.5, 1.3.2, 1.3.4, 1.5.10

The technical documents of partly completed machinery is compiled in accordance with section B of Annex VII of the Directive 2006/42/EC.

The following harmonized standards have been applied:

- EN 13155:2003+A2:2009
- EN ISO 12100:2010
- ISO/TR 14121-2:2007

All relevant information about the partly completed machinery will be transmitted by post or electronically, in response to a reasoned request by the national authorities.

Partly completed machinery must not be put into service until the final machinery into which it is to be incorporated has been declared in conformity with the provisions of the Directive 2006/42/CE.

Person authorized to compile the technical documentation:
Juho Suominen, Address: Varespellontie 6, FI-21500 Kaarina, Finland

The original document of this declaration is published in Finnish 30.6.2026

Place and date: Kaarina 30.6.2026

Markku Oksanen
Managing Director
Ixtur Oy