01.07.2026

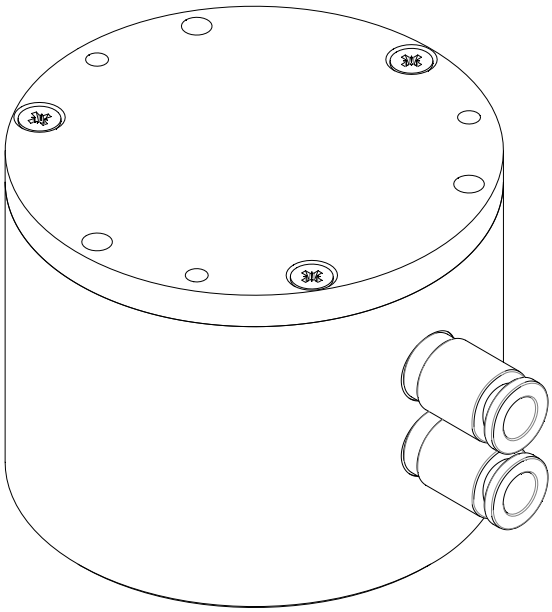

Product Instructions

PNEUMATIC MAGNET IXTUR MAP-40

Original User Manual

IXTUR OY | VARESPELLONTIE 6, FI-21500 KAARINA FINLAND, WWW.IXTUR.COM

Content

Introduction and Warnings 2
Technical Specifications 3
Holding Force 4
Installing the Product 7
Using MAP-40 pneumatic magnet 8
Maintenance and inspections 8
Warranty 8
Patent Pending 8
Declaration of Conformity 9

Introduction and Warnings

MAP-40 is a pneumatic magnet meant for attaching ferromagnetic parts in lifting, work holding or automation applications. The magnet's state, attached or detached, can be changed pneumatically. MAP-40 pneumatic magnet doesn't need compressed air to keep its state. Air pressure is needed only to change the state from attached to detached or vice versa.

- Please read this manual carefully before deployment to ensure safe use of the device.

- This device includes a source of magnetic field. A fluctuating magnetic field is produced during the use in the proximity of the device.

- This device produces a magnetic field that may interfere with medical devices such as metallic implants or cardiac pacemakers. Do not use this device and keep out of close proximity unless you have approval from the manufacturer of the medical device or from your physician.

- Do not disassemble or replace the device parts. Only pneumatic connectors are user changeable.
- The device must not be used for lifting or transporting people.
- Always pay special attention to the factors that may decrease the holding force of the magnet.
- The permitted holding force must not be exceeded.
- Do not operate a damaged or malfunctioning device.
- The designer and manufacturer of other systems should always ensure that systems where this device will be integrated to meet local and national safety regulations.

Technical Specifications

Dimensions:

- Height: 50.0 mm
- Diameter: 65.0 mm
- Weight: 0.94 kg

Capacity:

- Holding force: minimum 1177 N (S235 S ≥ 8 mm)
- Rated lifting capacity with safety factor 3: 40 kg (S235 S ≥ 8 mm)
- Residual holding force: maximum 1.0 N

Environmental conditions:

- Operating temperature: 0 °C … +50 °C
- Storage temperature: -20 °C … +50 °C
- Humidity 0 % … 90 %
- IP67 (The product is protected from dust and temporary immersion up to 1 m)

Requirements for compressed air:

- Recommended pressure: 6.0 bar
- Functional range: 5.0 … 8.0 bar
- Water separating
- Particle filtering ≤ 5µm

Information related to medical implants

- Safety distance for a person with active implanted device is 50 cm of air or other non-magnetic material. The distance is measured from the magnet or magnetic material attached to it.
    - *Maximum static magnetic field of MAP-40 is 260 mT on the gripping surface.*
    - *Interference with active implanted devices, e.g. cardiac pacemakers – Action level for exposure to static magnetic fields is 0,5 mT [Directive 2013/35/EC].*

Holding Force

Holding force and rated lifting capacity of MAP-40 can only be applied when the forces are perpendicular to the magnet's gripping surface.

Three factors affect magnet's holding force:

- Material properties
- Thickness of the load
- Distance between gripping surface and attached load (airgap)

Holding force and lifting capacity of MAP-40 pneumatic magnet are rated with steel EN S235. Most other steel materials produce lower holding force. Also hardened steel produces lower holding force.

Material's capacity to conduct magnetic field depends on its thickness. A thinner material has weaker capacity compared to a thicker material. Increasing material thickness increases the material's capability to conduct magnetic field until a magnet specific maximum value is reached. See figure 2: *MAP-40 holding force in proportion to material thickness*

Any material that separates the magnet's gripping surface from the surface of the load reduces the total magnetic holding force. Reduction can be caused by non-magnetic materials or by materials with weak magnetic qualities, such as, zinc or paint or similar coating, rust, frost or air. The distance between the surfaces caused by materials above is commonly called as airgap.

Surfaces must be clean and the airgap zero to achieve maximum holding force. The load surface must also be flat and it must occupy the gripping surface of the device completely. See figure 3: *MAP-40 holding force in proportion to airgap*.

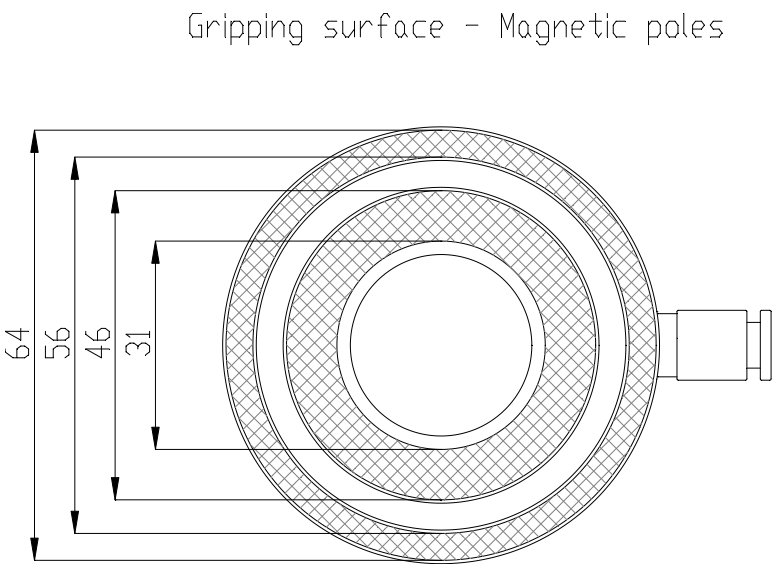

Figure 1. The gripping surface and magnetic poles of MAP-40.

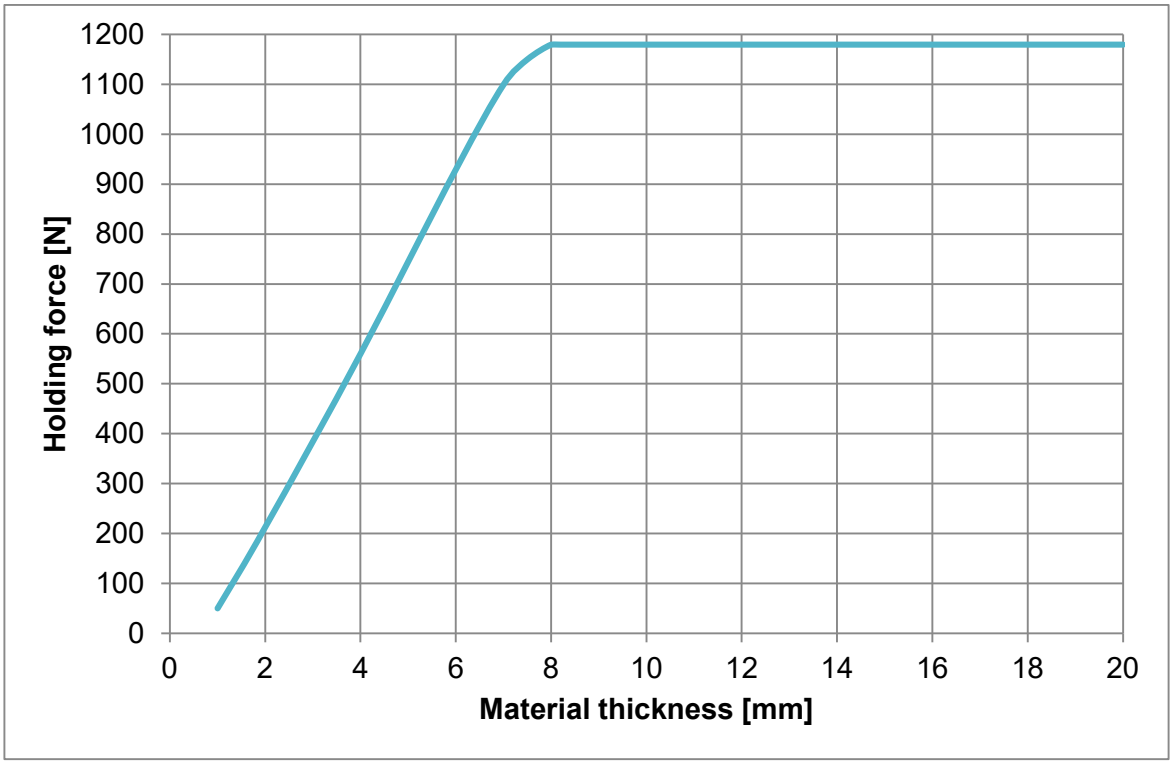

Figure 2. MAP-40 holding force in proportion to material thickness

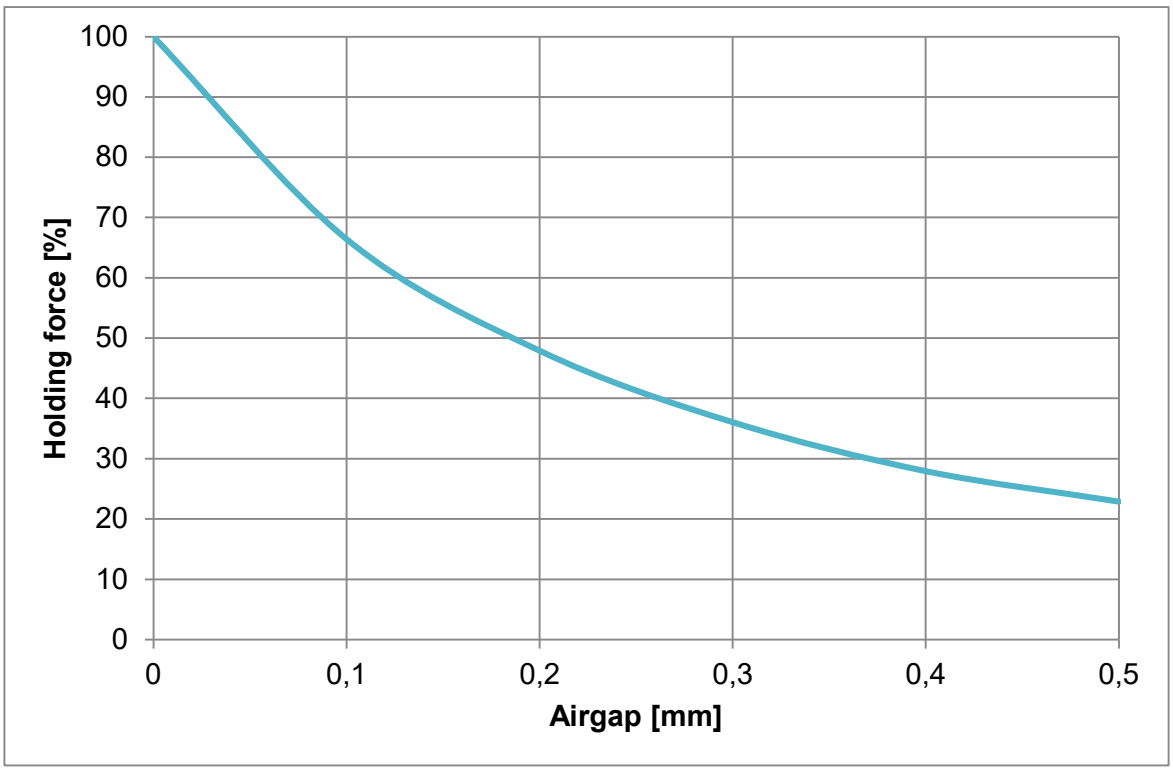

Figure 3. MAP-40 holding force in proportion to airgap

⚠ Holding force of 1177 N is determined with steel EN S235 with material thickness 8 mm. Most other magnetic materials result in lower holding force.

⚠ When lifting a piece from a stack, note that also the piece below the lifted piece can be attached to the magnet.

⚠ The forces caused by acceleration must be considered. For example, sudden moves cause stronger forces than slow and smooth moves.

⚠ Before magnet attachment, both the magnet's gripping surface and the load material surface must be cleaned of foreign materials to minimize the airgap that reduces the holding force.

⚠ Due to residual magnetism, the magnet's lifting surface may contain minor magnetic particles or pieces which reduce the holding force.

⚠ The load material surface may bend, which produces an airgap and reduces the holding force. Especially thin materials may cause this effect.

Installing the Product

MAP-40 pneumatic magnet has to be installed using the M4 screws (3 pcs.) according to Figure 4. The pneumatic connections have to be made using 6,0 mm tube.

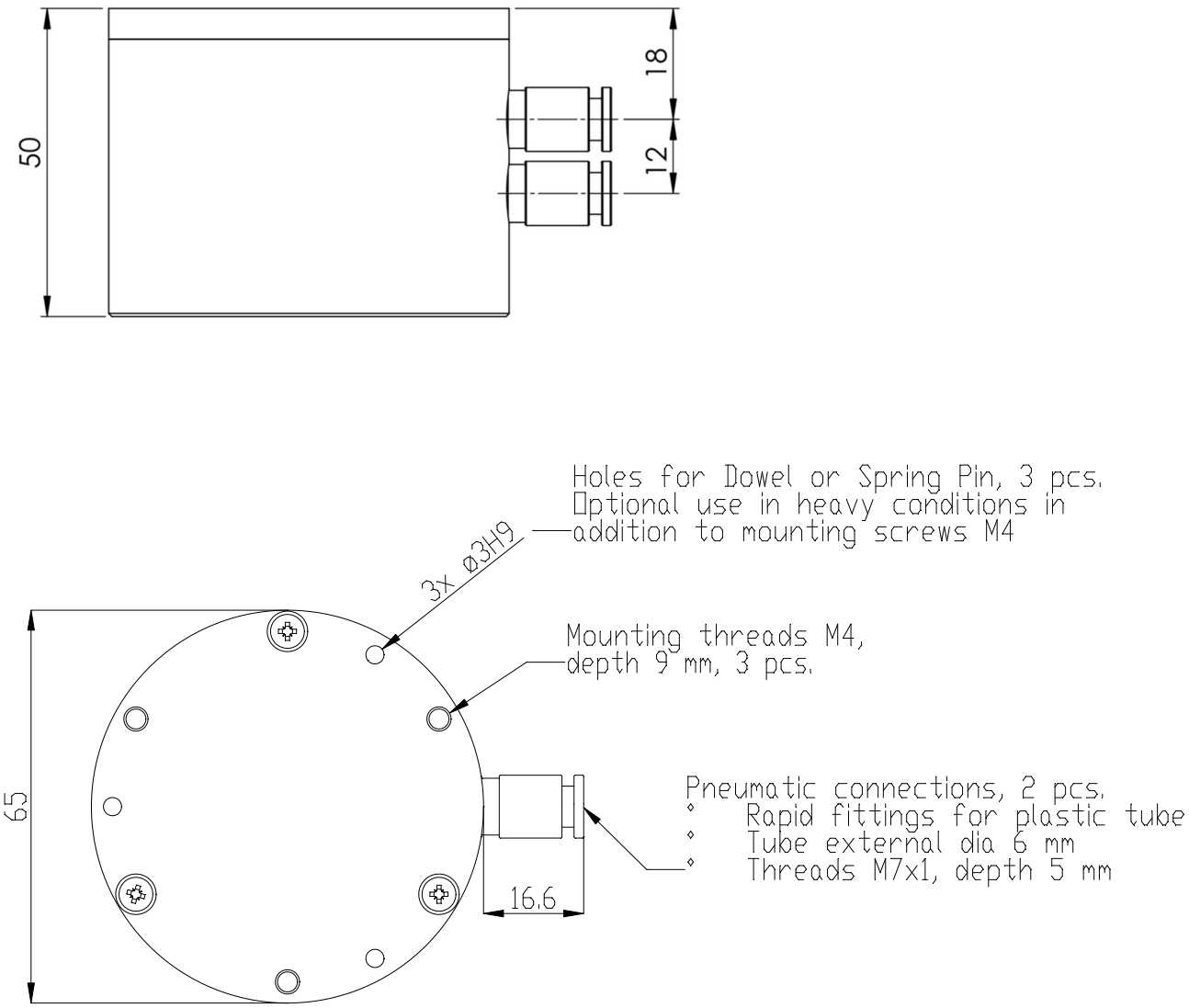

Figure 4. Mounting dimensions of MAP-40.

Using MAP-40 pneumatic magnet

When the air pressure in the upper pneumatic connection is at least 5.0 bar higher than in the lower connection, the magnet is set ON (attach the metal). When the air pressure in the lower pneumatic connection is at least 5.0 bar higher than in the upper connection, the magnet is set OFF (detach the metal). The same pressure in both air hose contacts or no pressure at all keeps the magnet's current state.

Maintenance and inspections

MAP-40 pneumatic magnet itself is maintenance free.

If MAP-40 pneumatic magnet has been dropped down or it has been exposed to some other impact, it must be inspected for any damages before continuing its use.

Do not use the device if you find any damages or malfunctions!

Warranty

The product has a 12 months warranty from the date of delivery. The warranty covers material and manufacturing defects. Warranty does not cover defects caused by a misuse of the product against the instructions and regulations in this manual. The warranty does not cover normal wear and tear.

Patent Pending

Several patent applications are pending related to MAP-40 and Ixtur magnet technology.

Declaration of Conformity

Declaration of incorporation of partly completed machinery

Directive 2006/42/EC

We hereby declare that this partly completed machinery, *Pneumatic Magnet MAP-40*, complies with the essential requirements of the Directive 2006/42/EC on Machinery and the following harmonized standards have been applied and fulfilled:

- EN ISO 12100:2010
- ISO/TR 14121-2:2007
- EN 13155:2003+A2:2009

The technical documents of partly completed machinery is compiled in accordance with section B of Annex VII of Directive 2006/42/EC, that can be transmit, in response to a reasoned request by the national authorities.

Partly completed machinery must not be put into service until the final machinery into which it is to be incorporated has been declared in conformity with the provisions of the Directive 2006/42/CE on Machinery

01.07.2026

INCORPORATION OF PARTLY COMPLETED MACHINERY

Translation of the original

Directive 2006/42/EC

Ixtur Oy
Varespellontie 6
21500 KAARINA
Finland

Hereby declares that the following partly completed machinery

Description	Pneumatic magnet Gripper
Model	MAP-40
ID number	A12A … I99B

fulfills the following essential requirements of Directive 2006/42/EY:

- Annex I: 1.1.2 a, 1.1.3, 1.1.5, 1.3.2, 1.3.4, 1.5.10

The technical documents of partly completed machinery is compiled in accordance with section B of Annex VII of the Directive 2006/42/EC.

The following harmonized standards have been applied:

- EN 13155:2003+A2:2009
- EN ISO 12100:2010
- ISO/TR 14121-2:2007

All relevant information about the partly completed machinery will be transmitted by post or electronically, in response to a reasoned request by the national authorities.

Partly completed machinery must not be put into service until the final machinery into which it is to be incorporated has been declared in conformity with the provisions of the Directive 2006/42/CE.

Person authorized to compile the technical documentation:
Juho Suominen, Address: Varespellontie 6, FI-21500 Kaarina, Finland

The original document of this declaration is published in Finnish 29.6.2026

Place and date: Kaarina 29.6.2026

Markku Oksanen
Managing Director
Ixtur Oy