VERT-M41.3-E20.0 | 40-06 770Kv G2

1 Features

Key Features

- 770Kv 40-06 size motor
- 6S 45A ESC

Performance & Control

- Velocity control with tunable PIDs & 2nd order feed forward
- Field Estimated Control: Best-in-class efficiency
- Impossible to desync
- Propeller positioning capabilities
- 3D reversible, no delay while crossing zero
- Industry-leading rise & response times
- Regenerative & active braking
- Active freewheeling
- Fast FET switching, use of gate drivers
- Voltage controller
- PWM controller
- Coast and brake modes
- No minimum speed
- Backdrivable

System Integration

- Motor with built-in ESC & position sensor
- Communication protocols: DroneCAN, DShot (150-1200), 1-2ms PWM, Serial (UART) w/ access to control parameters, Oneshot (42,125), and Multishot
- Modular design allows custom wire exits, higher IP ratings, and blower fans.

Safety & Reliability

- Over-current, over-voltage, over-speed & over-temperature protection
- Access to standard & custom telemetry
- Motor health monitoring
- Safe arming procedure
- Pro Kit enables IP55 for the ESC, IP15 for the motor, upgradable to IP45 with optional rotor and coil covers

2 Applications

- Drone Propulsion
- Robotics

3 Description

The VERT-M41.3-E20.0 is an ultra-compact, lightweight drone propulsion module that tightly integrates a high-performance 40-06 770Kv motor with a 45A continuous, 6S ESC and position sensor. It has an open and closed loop velocity controller designed primarily to drive propeller loads. Its performance is comparable to or better than other 40-06 sized motors and can operate at any speed from -18700RPM to 18700RPM thanks to its sensored control.

The motor can be driven with the integrated PID velocity controller with a second order polynomial feed forward, which is ideal for propeller applications. This sits on top of a voltage controller, which compensates for varying input voltages such as battery charge levels. Finally, the core is a raw PWM controller. Any of the above controllers can be used by the user.

The modular design allows various configurations:

- Base: The elemental core without any addons.
- Default: The Base kit plus a side daughter board with solder pads for power and signals.
- Performance: The Default kit plus a blower fan rotor cover for additional cooling.
- Pro Kit: The Base kit with a sealed downward eject cabling for an IP55 ESC as well as optional rotor and coil covers for an IP45 motor.

 V1.3 ©2026 IQinetics Technologies Inc.

4 Specifications

Table 1: Absolute Maximum Ratings

Description	Symbol	Min	Max	Unit	Notes
Supply Voltage	V_{CC}	-0.3	30	V	
Digital Logic Voltage	V_L	-0.3	7.3	V	3.3 V system, 5 V tolerant
CAN Voltage	V_{CAN}	-40	40	V	ISO 11898-2 compliant
MCU Temperature	T_{MCU}	-40	125	°C	
ESC Temperature	T_{ESC}	-40	125	°C	Maximin and minimax component ratings
Coil Temperature	T_c		150	°C	
Bearing Temperature	T_b	-20	80	°C	

Table 2: Recommended Operating Conditions

Description	Symbol	Min	Max	Unit	Notes
Battery Cells	S	2	6	S	Standard or high voltage Li-Ion/Li-Po.
Power Supply Voltage	V_{CC}	5.5	26.1	V	Ensure motor regen does not exceed voltage limit. Use built-in limiter or an external load.
Ambient Temperature	T_a	-20	50	°C	Higher possible with reduced performance
Coil Temperature	T_c	-	150	°C	Controller will self-limit performance when approaching max temperature
MCU Temperature	T_{MCU}	-40	120	°C	Controller will self-limit performance when approaching max temperature

Table 3: Properties

Description	Symbol	Value	Unit	Notes
Speed Constant	K_v	765	RPM/V	
Torque/EMF Constant	K_t	0.0125	$\mathrm{N\,m\,A^{-1}}$	
Resistance	R	0.046	Ω	25°C
Effective Resistance	R_e	0.056	Ω	motor + controller, 25°C
Mass, Base module	m	86	g	Base config. without wires/accessories
Mass, Default module	m	96	g	Default config. without wires/accessories
Mass, Pro Kit module	m	133	g	Module with 2' cables: 124g, Coil cover: 3.7g, Rotor cover with screen: 5.5g
Continuous Torque	τ_c	340 (370)	N mm	Without (with) fan rotor cover, in airflow, 25°C ambient
Continuous Current	I_S	27 (30)	A	Motor current without (with) fan rotor cover, in airflow, 25°C ambient
Pulsed Current	I_{SP}	70	A	Motor current, 100ms, 25°C ambient
No Load Speed	ω_0	1190	$\mathrm{rad\,s^{-1}}$	$@V_{CC} = 15\,\mathrm{V}$
No Load Current	I_0	1.35	A	$@V_{CC} = 15\,\mathrm{V}$
Rated Life	T_{rt}	200	h	Meets all published performance requirements under standard operating conditions.
Inspection Interval	T_{insp}	20	h	Maximum operating time between required inspections to verify continued airworthiness and safe operation.
Design Life	T_{des}	250	h	Engineering life target based on analysis, component selection, and design margins.
Demonstrated Life	T_{dem}	1,000+	h	Life achieved through testing under representative operating conditions.

5 Electrical Interface

5.1 Base Module Wiring

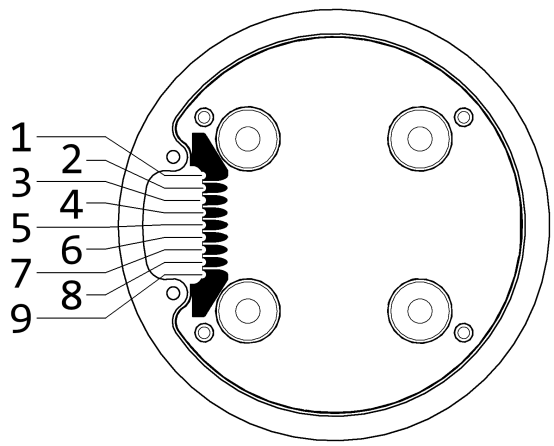

Figure 1: Main Board

Table 4: Base Module Pin Out Descriptions

Pin No.	Name	Description
1	V+	Power high, usually the positive battery terminal.
2	IO1	GPIO1
3	IO2	GPIO2 can connect to a WS27811 driven (Neopixel) RGB LED.
4	IO3	GPIO3 can output a PWM, useful for controlling high power LED drivers.
5	CANL	CAN low
6	CANH	CAN high
7	RX/PWM	Controller RX / host TX and PWM input
8	TX/TELEM	Controller TX / host RX and telemetry output
9	V-	Power ground, usually the negative battery terminal

The VERT-M41.3-E20.0 can be shipped without a stator cover and a connector board. This allows the customer to commission from Vertiq or manufacture their own connector board with wires and connectors of their choosing. Wires can be routed horizontally or vertically out of the motor using different connector boards. IP ratings as high as IP56 can be achieved when connector boards and wires are designed to mate with their mounts.

The motor module can be given additional functionality by modifying the connector board. An optoisolator, an RS-232 transceiver, or an RS-485 transceiver can be added in series to the UART RX and TX lines. The GPIOs can be routed to their destinations, like LED drivers, enable lines, or other sensors. The frame can be grounded for noise suppression. Additional capacitance can be added. This list is not exhaustive.

Upon request, GPIO1 can be rerouted to an ADC pin for applications such as thermistors, potentiometers, or other sensors. Contact Vertiq for details.

 ©2026 IQinetics Technologies Inc.

5.2 Default Module Wiring

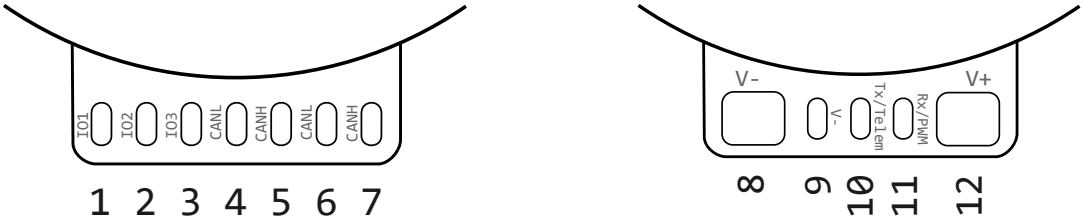

(a) Bottom Side (b) Top Side

Figure 2: Connector Board

Table 5: Bottom Pin Out Descriptions

Pin No.	Name	Description
1	IO1	GPIO1
2	IO2	GPIO2 can connect to a WS27811 driven (Neopixel) RGB LED.
3	IO3	GPIO3 can output a PWM, useful for high power LED drivers.
4	CANL	CAN low
5	CANH	CAN high
6	CANL	CAN low
7	CANH	CAN high

Table 6: Top Pin Out Descriptions

Pin No.	Name	Description
8	V-	Power ground, usually the negative battery terminal
9	V-	Signal ground, useful for setup with a PC
10	TX/TELEM	Controller TX / host RX and telemetry output
11	RX/PWM	Controller RX / host TX and PWM input
12	V+	Power high, usually the positive battery terminal.

5.2.1 Communication Wiring

Default modules are shipped with a connector board attached to facilitate wiring. The connector board features pads to which cables can be soldered.

The board supports up to two CAN connections, both of which are connected to the same peripheral to allow for a true bus connection through the motor. This configuration does not allow dual CAN redundancy. Both RX/TX pads are a Digital Logic Voltage, V_L.

All General Purpose I/O pins are a Digital Logic Voltage, V_L. GPIO2 can connect to a WS2811 driven (Neopixel) RGB LED. GPIO3 can output a PWM, useful for high power LED drivers. These are the default functions of the GPIO pins. Contact Vertiq for custom firmware to enable custom pin behaviors.

5.2.2 Supply Wiring

Power cables can be soldered to the top side of the connector board, to V- and V+.

5.3 Pro Kit Module Wiring

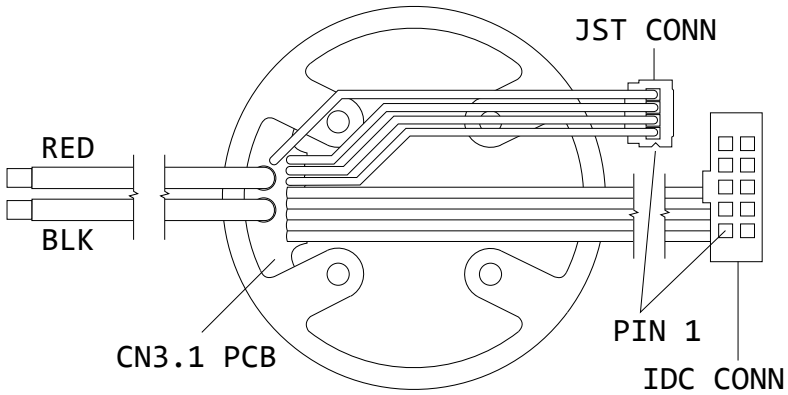

Figure 3: Downward Eject

Table 7: Pro Kit Pin Out Descriptions

PCB	Ribbon	IDC CONN	JST CONN	Power	Name	Description
1	Black	1			GND	Power ground
2	White	2			TX/TELEM	Controller TX / host RX and telemetry output
3	Gray	3			RX/PWM	Controller RX / host TX and PWM input
4	Purple	4			CANH	CAN high
5	Blue	5			CANL	CAN low
6			1		GND	Power ground
7			2		LED WHT	PWM brightness control of white LEDs
8			3		LED RGB	Controls RBG LED via a 1-wire serial protocol based on the WS2812 RBB controller
9			4		V+	Power high
10				Red	V+	Power high, usually battery positive
11				Black	V-	Power ground, usually battery negative

5.3.1 Communication Wiring

Pro Kit modules are shipped with attached wiring harness.

Communications pass through a .050”[1.27mm] pitch ribbon cable. A CNC Tech 3030-10-0102-00 connector terminates the ribbon. This may be used, or discarded if a different connection scheme is preferred.

Both RX/TX pads are a Digital Logic Voltage. The wiring harness supports a single CAN connection. This configuration does not allow dual CAN redundancy.

The harness also includes a short cable terminating with a JST ZER-04V-S connector. This is compatible with the Vertiq LD3.1.0 LED board, which includes white and RGB LEDs. These are the default functions of the GPIO pins. Contact Vertiq for custom firmware to enable custom pin behaviors.

5.3.2 Supply Wiring

The black and red power wires are 12AWG M22759/32 wire.

6 Mechanical Interface

6.1 Base Configuration

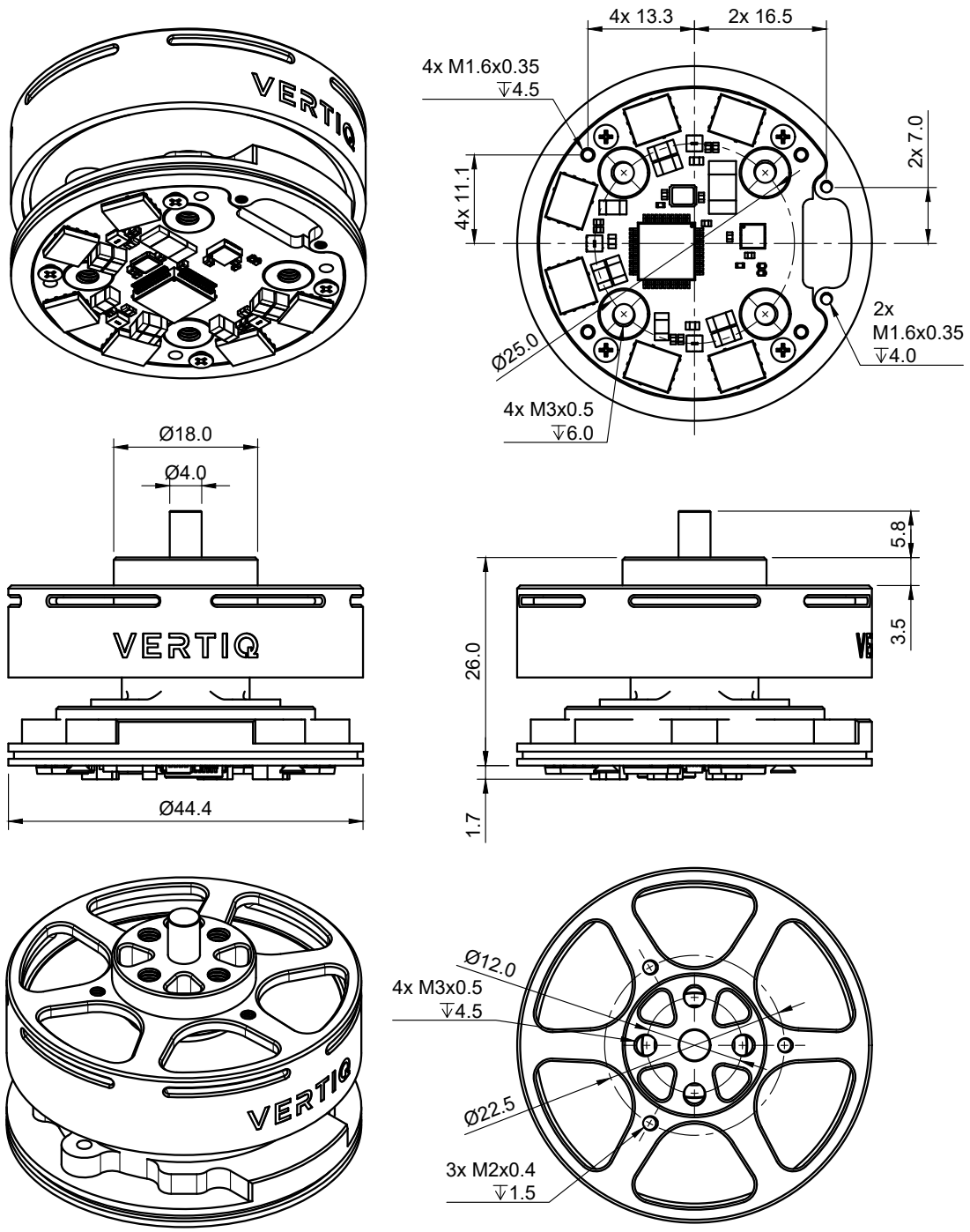

6.2 Default Configuration

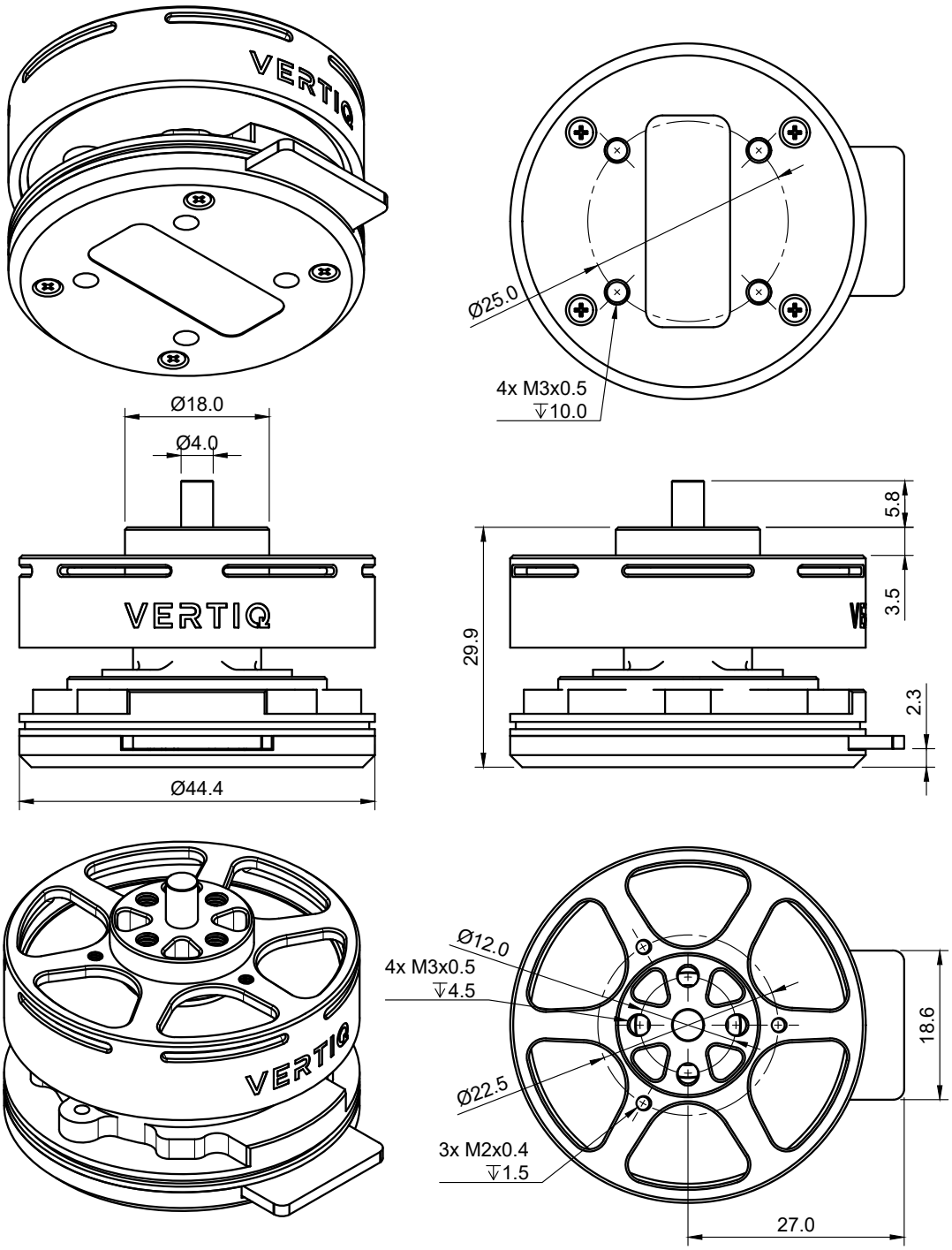

6.3 Pro Kit Configuration

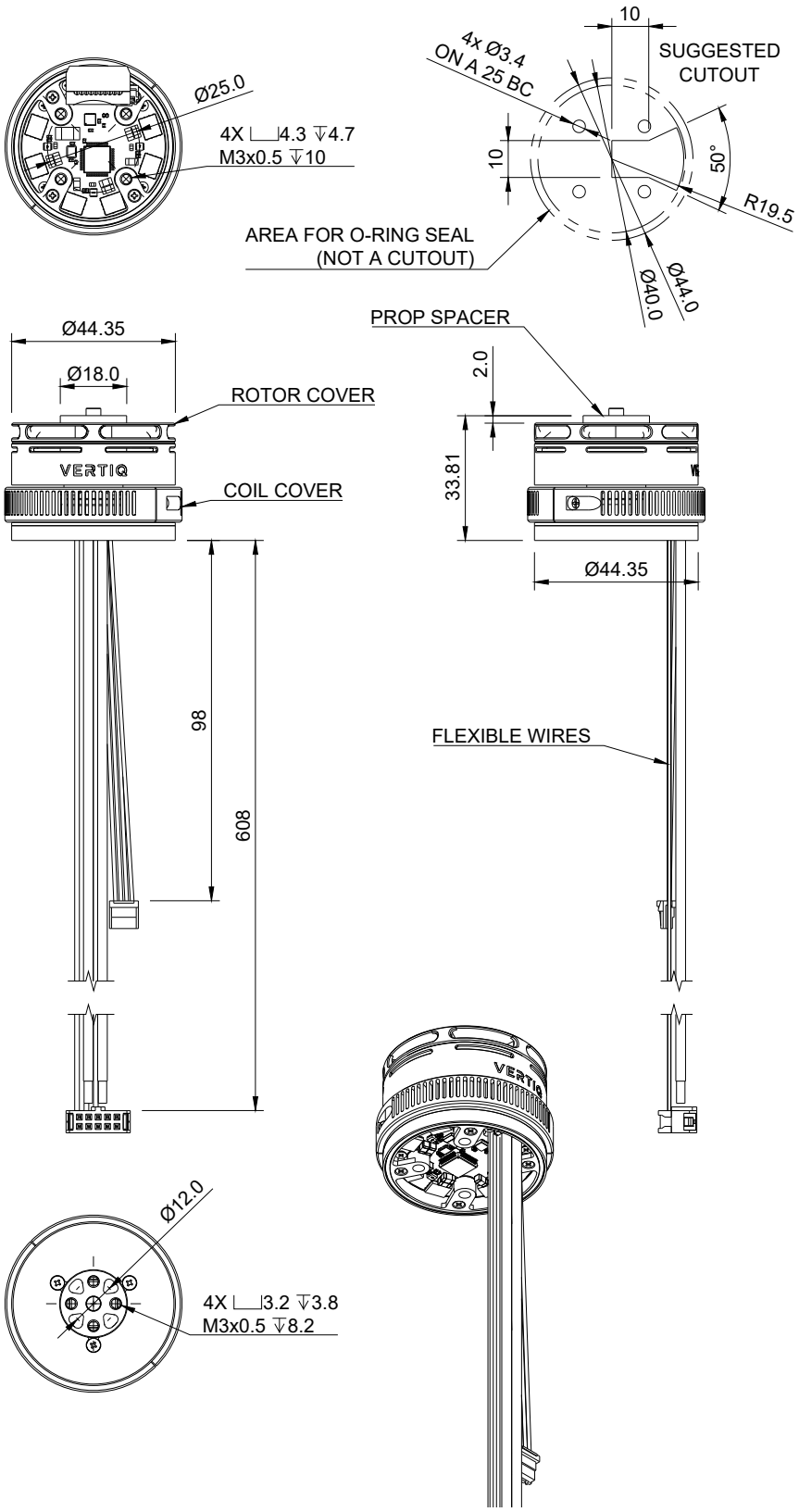

7 Safety Features

7.1 Over Current Protection

The ESC uses both a predictive and reactive method for over current protection. The motor controller will not apply a voltage which would put the controller or motor at risk of over current. If an overcurrent condition is detected, despite the predictive current protection, a reactive current protection will disable all MOSFETs. The reactive current protection can be configured for latching or non-latching behavior. Latching causes the controller to remain disabled until the user clears the error flag. Non-latching immediately recovers once the current lowers below the threshold. Non-latching is the default behavior.

7.2 Over Temperature Protection

The controller has an onboard temperature sensing circuit. If the temperature sensor detects a temperature that is approaching the controller's maximum temperature limit, the controller will begin to derate. While in derate, the module will spin at a lower speed and torque than expected. The controller will continue outputting as much power as possible without exceeding its thermal limit. If the controller's temperature drops, the controller will automatically exit derate mode and continue normal operation.

Though there is no temperature sensor in the motor's coils, the controller contains a predictive model which estimates the coil temperature. The same derating process as above is applied to the estimated coil temperatures, applying as much power as possible without causing damage. This protection ensures that large loads or stalled conditions do not overheat and damage the motor coils and magnets.

If an over temperature condition is detected, despite the predictive thermal protection, a reactive thermal protection will disable all MOSFETs. The reactive thermal protection can be configured for latching or non-latching behavior. Latching causes the controller to remain disabled until the user clears the error flag. Non-latching immediately recovers once the temperature lowers below the threshold. Non-latching is the default behavior.

7.3 Over Speed Protection

A soft limiter will reduce the voltage applied to the motor once ω_{max} is exceeded. The farther the speed is above ω_{max} the lower the output voltage of the controller. In extreme overspeed situations the motor acts as a brake, effectively shorting the three phases of the motor together. This will protect the motor from extremely large load changes, poor PID tuning values, and the unlikely chance of a runaway condition. This feature will fight an externally applied load that causes an over speed, but is not able to guarantee the prevention of an over speed condition in this situation.

7.4 Regeneration Voltage Protection

The VERT-M41.3-E20.0 is a four quadrant motor-controller, which means it can both motor and generate in both directions. When the motor is generating, the voltage can spike if the connected electronics cannot absorb the energy that is being generated. Rechargeable batteries and capacitors can absorb this energy. Power supplies, diode-protected wiring, and some protected batteries do not absorb energy. This leads to a voltage spike that may destroy the motor and any attached equipment.

The controller can prevent these spikes from occurring by limiting the voltage applied to the motor. If an out of allowable range generation occurs, the motor will decrease its own generation, thereby protecting the circuitry. This protection does not prevent the damage from externally applied voltages.

7.5 Command Timeout Protection

A user settable timeout automatically disarms and puts the motor in to coast mode if it does not receive a valid message within a specified amount of time. The normal operation resumes upon receiving a new message.

 ©2026 IQinetics Technologies Inc.

7.6 Input Connection Protection

All exposed pins are protected with ESD diodes and a small amount of reverse polarity protection. Do not knowingly or intentionally apply reverse polarity or out of limit voltages to the exposed pins.

7.7 Watchdog Protection

In case of an unlikely error in the controller that causes it to freeze, the controller will automatically reboot. While this may allow for a recovery, all normal startup procedures are re-performed and any arming sequence or auxiliary commands must be redone.

8 Additional Documentation

- Product Page
- Thrust data
- Manual, Tutorials, and API Documentation
- API Libraries
- Module Tracking

9 Revision History

Table 8: Revision History

Version	Date	Changes
1.0	2024-05-23	Initial Release
1.1	2025-02-28	Add Pro Kit detail
1.2	2025-12-22	Update PN from M41.1 to M41.3, update mechanical dwgs
1.3	2026-06-16	Add lifetime hours.

 ©2026 IQinetics Technologies Inc.