BIONIC M
Powering Mobility For All

# Confidence in Every Step

The new MPK with flexion and extension assist.

## ASISTA™

PDAC Verified
L5827 • L5856

# Move Easier. Walk With Confidence.

**ASISTA**™ provides movement assistance that helps users walk confidently on uneven ground, reduce fatigue, and move through life with greater ease.

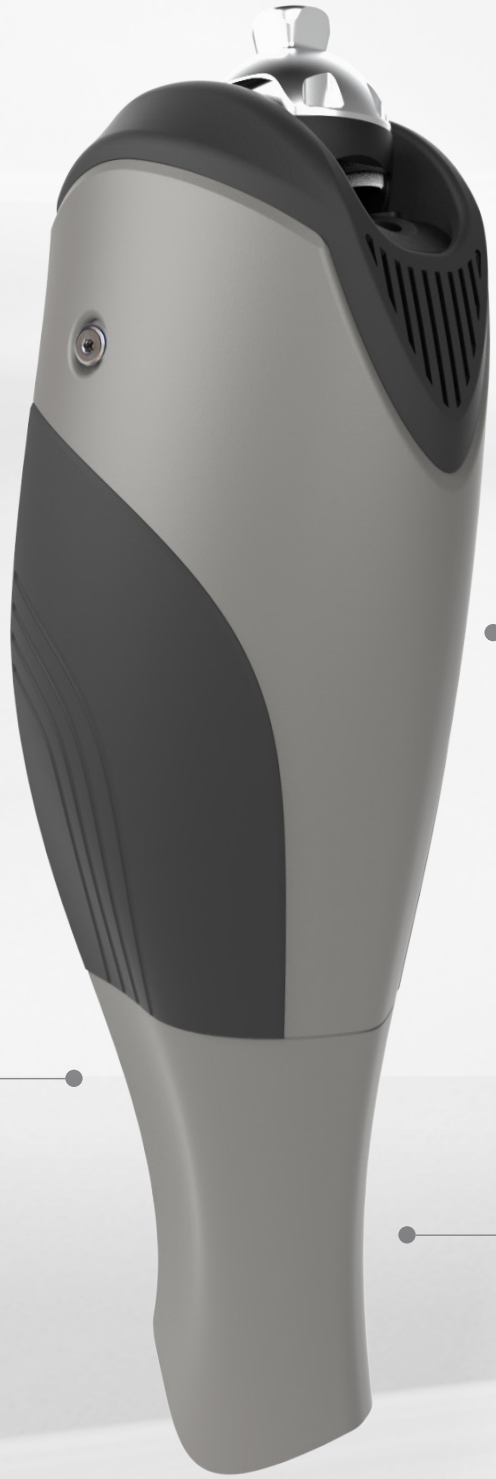

### Walk with Confidence on Uneven Ground

Flexion assistance helps improve clearance so users can move across grass, gravel, slopes, and uneven outdoor terrain with greater confidence.

### Walk Further with Less Fatigue

Flexion and extension assistance help reduce the effort required with each step, supporting longer, more comfortable daily mobility.

### Stand Up with Less Effort

Extension assistance supports smoother sit-to-stand transitions and helps reduce reliance on upper body compensation.

### Added Stability When it Matters Most

Controlled assistance supports key moments of movement to help users feel more secure when standing and walking.

BIONIC M
Powering Mobility For All

# The Company Behind ASISTA™

Engineering intelligent mobility with lived experience and clinical purpose.

## Founded on Lived Experience

At age nine, Xiaojun Sun underwent a right leg amputation.

This life-changing experience inspired him to combine lived insight with research at **The University of Tokyo**, founding BionicM to create advanced, user-friendly mobility solutions.

Asista reflects Xiaojun's vision: technology that is **intelligent**, **dependable**, and **designed for real life**.

**User - Informed Clinical Design**

Built around real - world feedback from users and clinicians

**Predictable Stability & Patient Safety**

Engineers to improve confidence and reduce uncertainty

**Responsive Assistance for Dynamic Movement**

Adaptive support that responds naturally to the way patients move

**Practical Support for Clinical Use**

Designed to integrate seamlessly into everyday clinical practice

## About BionicM

BionicM is a robotics company founded on lived experience and built on advanced electromechanical engineering. We design intelligent mobility systems that expand access to powered assistance while preserving natural movement and user control.

Our mission is simple: bring powerful, **practical mobility solutions to more people** without unnecessary complexity.

## BionicM Academy

BionicM.com

Online resource for education, training, and product support.

- Training modules
- Clinical best practices
- Technical guidance
- Ongoing learning

## Reimbursement Support

Our experts support your reimbursement process every step of the way, *at no additional cost:*

- Documentation guidance
- Claims assistance
- Compliance expertise

## Industry Accomplishments

reddot winner 2020 luminary

CES Innovation Awards 2025 Best of Innovation

BIONIC M
Powering Mobility For All

## Specifications

| | |
|---|---|
| Product Name | **ASISTA™** |
| Activity Level | K2, K3 |
| Model | MS001 |
| Amp. Level | Transfemoral amputation, knee disarticulation |
| Weight Limit Maximum | Load of 275lbs (125kg) |
| IP Rating | IP24 |
| Width | 111.0mm |
| Proximal & Distal Connection | Male pyramid only |
| Weight | 3kg including battery |
| Maximum Extension | 0° |
| Maximum Flexion Angle | 132° |
| Operating Temperature | 14°F to 104°F (-10°C to 40°C) |
| Internal Power Source | Lithium-Ion Battery<br>• Fully charged in 3~4 hours |
| Connector Type | USB-C |
| Warranty | 3 Years |
| Reimbursement Codes | L5827, L5856 |

*Please note that some specifications may be changed without notice in order to improve the performance of the product.

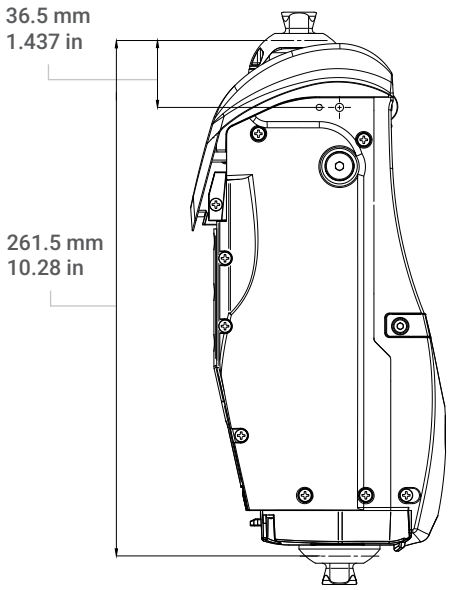


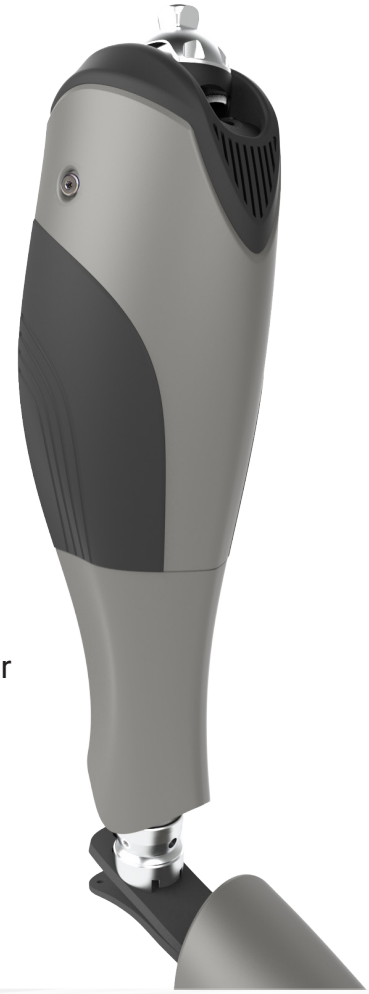

Color
Grey

## MoPro™ Control App

Intuitive app for practitioners to quickly adjust **ASISTA™**.

- Easy-to-use interface
- Powerful control
- Quick setup & tuning

Available for
**iPhone** & **iPad**

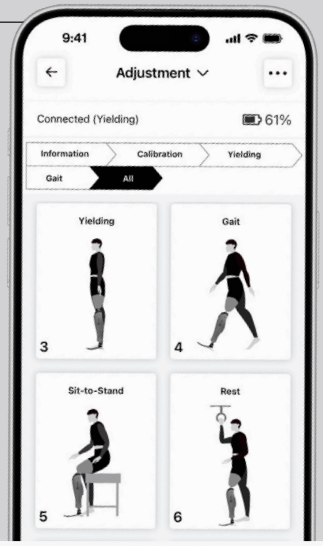


**BionicM - USA**
20130 Lakeview Center Plaza, Suite 400,
Ashburn, Virginia 20147

**Website:** https://www.BionicM.com

**BionicM - JAPAN**
203 The University of Tokyo Entrepreneur Plaza 7-3-1
Hongo Bunkyo-ku, Tokyo, 1130033, Japan

**Order Inquiries:** marketing_usa@bionicm.com

BionicM.com