UNIVERSAL ROBOTS
A Teradyne Robotics Company

UR30

Technical specification

Building off the same architecture as the UR20, the UR30 offers extraordinary lift in a compact footprint with superior motion control ensuring the perfect placement of large payloads.

Boasting 25% more torque the UR30 opens the door for high torque screw driving and the 30 kg payload brings productivity to everything from machine tending with multiple grippers to palletizing heavy parts.

Updated May 2025.

Copyright © 2025 by Universal Robots A/S. All rights reserved.

UR30

General specification

Payload	30 kg (66.1 lbs) 35 kg (77.1 lbs) with boundary conditions according to manual.
Reach	1300 mm (51.18 in)
Degrees of freedom	6 rotating joints
Programming	12 inch touchscreen with PolyScope graphical user interface
Power consumption (average)	
Maximum power	750 W
Moderate operating settings	300 W
Operating temperature range	Ambient temperature: 0-50˚C (32-122˚F)
Safety functions	21 configurable safety functions
In compliance with	EN ISO 13849-1 (PLd Category 3), EN ISO 10218-1 and UL 1740
Joint architecture	2-1-3

UR30 Robot Arm

Performance

Force sensing, tool flange/torque sensor	**Force, x-y-z**	**Torque, x-y-z**
Range	± 200.0 N	± 20.0 Nm
Precision	± 5.5 N	± 0.2 Nm
Accuracy	± 10.0 N	± 1.0 Nm

Movement

Maximum TCP speed	4 m/s	
Pose repeatability per ISO 9283	± 0.1 mm	
Axis movement	**Working range**	**Maximum speed**
Base	± 360°	± 120˚/s
Shoulder	± 360°	± 120˚/s
Elbow	± 360°	± 150˚/s
Wrist 1	± 360°	± 210˚/s
Wrist 2	± 360°	± 210˚/s
Wrist 3	± 360°	± 210˚/s

Features

IP Classification	IP65
Cleanroom classification ISO 14644-1 **Velocity and payload*	Class 4 at ≤ 80%*
Noise	< 67 dB(A)
Status identification	Light ring at robot base
Arm mounting	Any orientation
I/O Ports at tool flange	
Digital In	2
Digital Out	2
Analog In	2
Power supply voltage	12/24 V
Power supply	2 A (Dual pin), 1 A (Single pin)

Physical

Footprint	Ø245 mm
Materials	Aluminum, plastic, steel
Tool flange	EN ISO-9409-1-80-6-M8
Connector type	M8 8-pin female
Cable length (robot arm)	6 m (236 in/19.68 ft)
Weight without cable	63.5 kg (139.9 lbs)
Humidity	≤ 90% RH (non-condensing)

Contact

Universal Robots A/S
Energivej 51
5260 Odense
Denmark

+45 89 93 89 89
sales@universal-robots.com
universal-robots.com

3-Postion Enabling Teach Pendant

Features

IP classification	IP54
Humidity	≤ 90% RH (non-condensing)
Display resolution	1280 x 800 pixels

Physical

Materials	Plastic
Teach pendant size (W x H x D)	300 mm x 231 mm x 50 mm (11.8 in x 9.1 in x 1.97 in)
Weight	1.8 kg (3.961 lbs) including 1 m of teach pendant cable
Cable length	4.5 m (177.17 in)

Control Box

Features

IP classification	IP44
Humidity	≤ 90% RH (non-condensing)
I/O Ports	
Digital In	16
Digital Out	16
Analog In	2
Analog Out	2
Quadrature digital inputs	4
I/O Power Supply	24V, 2A
Industrial protocols	Modbus TCP (Client/Server) Ethernet/IP Adapter PROFINET device, PROFIsafe ROS/ROS2
Hardware interfaces	Ethernet 1 Gb/s USB 2.0 USB 3.0 Mini DisplayPort Injection Moulding Machine Interface (SPI AN-146 & Euromap-67)*
Power Source	100-240 VAC, 47-440 Hz

**Only valid for OEM version.*

Physical

Control Box Size (W x H x D)	460 mm x 449 mm x 254 mm (18.2 in x 17.6 in x 10 in)
Weight	12 kg (26.5 lbs)
Materials	Powder coated steel

The controlbox is also available in an OEM version.

UR30 payload curve

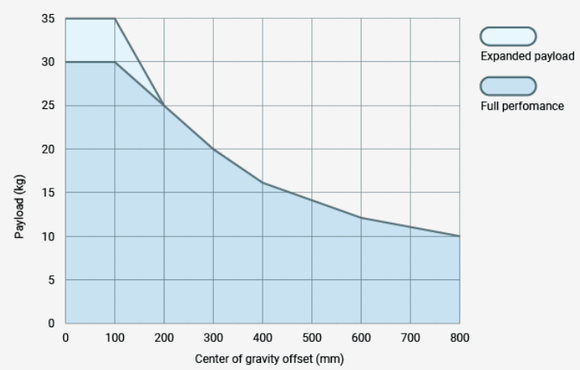

Interface for UR30 base flange

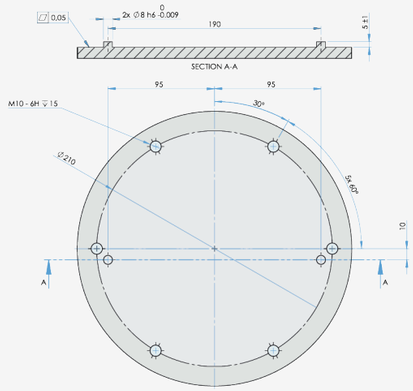

Tool flange for UR30

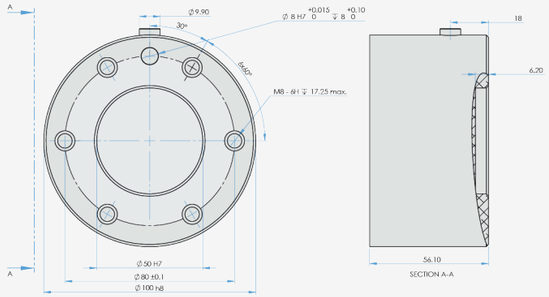

Dimensions and reach UR30

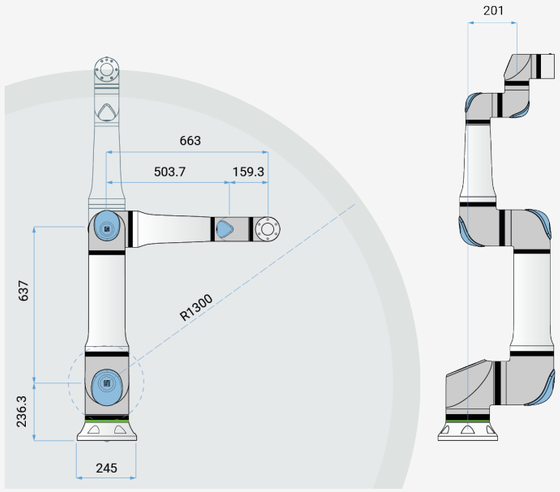

April 2026

UNLESS OTHERWISE SPECIFIED:
Dimensions are in millimeters. Tolerance ± 0,1 mm ± 0,5˚