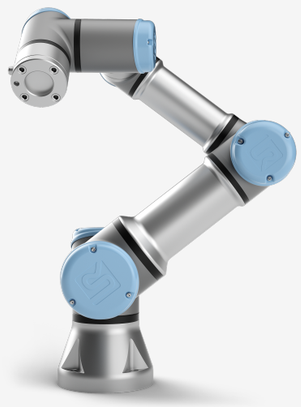

UNIVERSAL ROBOTS
A Teradyne Robotics Company

UR3e

Technical specification

The UR3e is the smallest and most compact of any UR robot. Boasting a 3 kg payload and a 500 mm reach, the small form factor of the UR3e makes it a perfect fit to navigate tight workspaces.

Today, more than 100,000 UR collaborative industrial robots have been delivered to customers across industries and around the world. The e-Series of cobots brings incredible flexibility and unparalleled ease of use to your application.

Updated May 2025.

Copyright © 2025 by Universal Robots A/S. All rights reserved.

UR3e

General specification

Payload	3 kg (6.6 lbs)
Reach	500 mm (19.7 in)
Degrees of freedom	6 rotating joints
Programming	12 inch touchscreen with PolyScope graphical user interface
Power consumption (average)	
Maximum power	300 W
Moderate operating settings	150 W
Operating temperature range	Ambient temperature: 0-50˚C (32-122˚F)
Safety functions	21 configurable safety functions
In compliance with	EN ISO 13849-1 (PLd Category 3), EN ISO 10218-1

UR3e Robot Arm

Performance

Force sensing, tool flange/torque sensor	**Force, x-y-z**	**Torque, x-y-z**
Range	± 30.0 N	± 10.0 Nm
Precision	± 2.0 N	± 0.1 Nm
Accuracy	± 3.5 N	± 0.1 Nm

Movement

Maximum TCP speed	3 m/s	
Pose repeatability per ISO 9283	± 0.03 mm	
Axis movement	**Working range**	**Maximum speed**
Base	± 360°	± 180˚/s
Shoulder	± 360°	± 180˚/s
Elbow	± 360°	± 180˚/s
Wrist 1	± 360°	± 360˚/s
Wrist 2	± 360°	± 360˚/s
Wrist 3	Infinite	± 360˚/s

Features

IP Classification	IP54
Noise	< 60 dB(A)
Arm mounting	Any orientation
I/O Ports at tool flange	
Digital In	2
Digital Out	2
Analog In	2
Power supply voltage	12/24 V
Power supply	600 mA

Physical

Footprint	Ø 128 mm
Materials	Aluminum, plastic, steel
Tool flange	M8 8-pin female, EN ISO-9409-1-50-4-M6
Connector type	M8 8-pin female
Cable length (robot arm)	6 m (236 in)
Weight including cable	11.2 kg (17.7 lbs)
Humidity	≤ 90% RH (non-condensing)

Contact

Universal Robots A/S
Energivej 51
5260 Odense
Denmark

+45 89 93 89 89
sales@universal-robots.com
universal-robots.com

Teach Pendant

Features

IP classification	IP54
Humidity	≤ 90% RH (non-condensing)
Display resolution	1280 x 800 pixels

Physical

Materials	Plastic
Teach pendant size (W x H x D)	300 mm x 231 mm x 50 mm (11.8 in x 9.1 in x 1.97 in)
Weight	1.6 kg (3.5 lbs) including 1 m of teach pendant cable
Cable length	4.5 m (177.17 in)

Control Box

Features

IP classification	IP44
Operating temperature range	Ambient temperature: 0-50°C (32-122°F)
Humidity	≤ 90% RH (non-condensing)
I/O Ports	
Digital In	16
Digital Out	16
Analog In	2
Analog Out	2
Quadrature digital inputs	4
I/O Power Supply	24V, 2A
Industrial protocols	Modbus TCP (Client/Server) Ethernet/IP Adapter PROFINET device, PROFIsafe ROS/ROS2
Hardware interfaces	Ethernet 1 Gb/s USB 2.0 USB 3.0 Mini DisplayPort Injection Moulding Machine Interface (SPI AN-146 & Euromap-67)*
Power Source	100-240 VAC, 47-440 Hz

**Only valid for OEM version.*

Physical

Control Box Size (W x H x D)	460 mm x 449 mm x 254 mm (18.2 in x 17.6 in x 10 in)
Weight	12 kg (26.5 lbs)
Materials	Powder coated steel

The controlbox is also available in an OEM version.

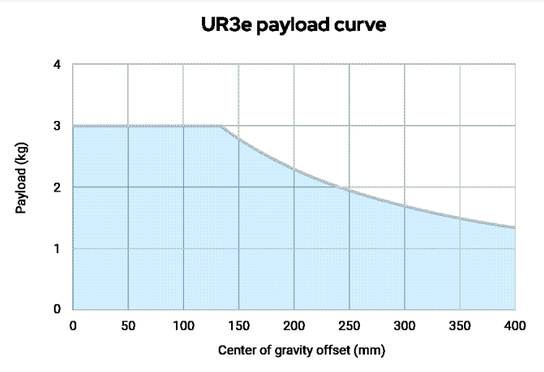

Interface for UR3e base flange

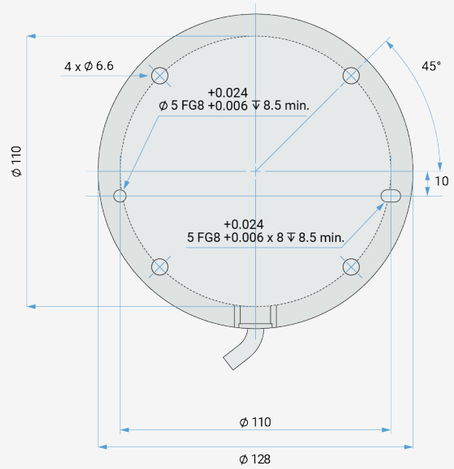

Tool flange for UR3e

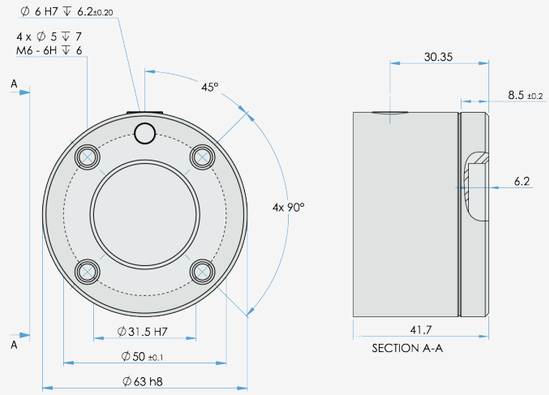

Dimensions and reach of UR3e

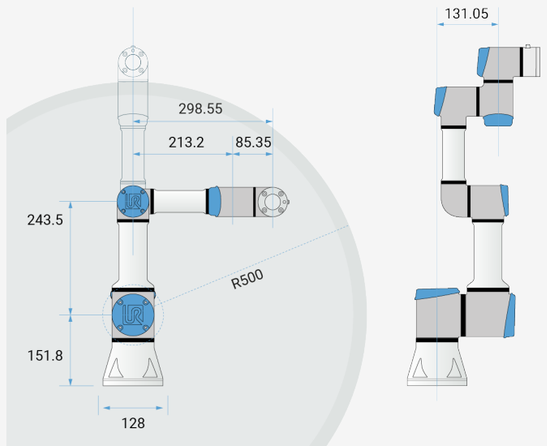

April 2026

UNLESS OTHERWISE SPECIFIED:

Dimensions are in millimeters. Tolerance ± 0,1 mm ± 0,5˚