SLAMTEC

Hermes

General Purpose Robot Platform

Model：H5M11-R148V

User Manual

- Small- to medium-sized robot development
- Highly adaptable and scalable
- Powerful optional functions

Learn more >

PLEASE READ THE USER MANUAL CAREFULLY BEFORE USE

2024/06/28.rev.1.8

Shanghai Slamtec Co., Ltd

Contents

1.INTRODUCTION 4
2. INTRODUCTION TO HERMES FEATURES 5
2.1Autonomous Path-Finding 5
2.2Robot Collaboration 5
2.3Cross-Floor Delivery 5
2.4Smart Obstacle Avoidance 5
2.5Comprehensive Safety 5
2.6Autonomous Recharging 5
3. HERMES SCHEMATIC DIAGRAM 6
4. HERMES CHARGING STATION 6
5. PARAMETERS 7
6. INSTRUCTIONS OF HARDWARE 13
6.1 Wire Instructions 13
6.2 Important Interfaces of Developing Board on RYD3399 14
6.3 Reference of Hardware Design 16
7. REFERENCE OF STRUCTURE DESIGN 18
7.1 Installing Interface of Host Computer 18
7.2 Instruction of Load Limit 20
7.3 Lidar Clearance Area 21
7.4 Deep Camera Clearance Area 22
7.5 Instruction of Transport Design 22
8. SETUP INSTRUCTIONS 23
8.1 Opening 23
8.2 Placing Charging Base 23
8.3 Power ON/OFF 24
8.4 Charging 24
8.5 Emergency stop & brake and reset 25
8.6 Map Building and Upload 25

Copyright 2016-2021 Shanghai Slamtec Co., Ltd.

8.7 Host Computer Completes Startup and Loading The Map 29

9. CONNECTION TO COMPUTER 31

10. ADJUSTING TOOLS 34

10.1 RoboStudio 34
10.2 Web Management Backstage 34

11. DEVELOPER TOOLS 35

11.1 Start Using 35
11.2 Inter-system Adjusting Framework 35
11.3 Instructions of Each System 35
11.4 Demonstrations of Code 37
11.5 Details Of Robot API 39

12. INTRODUCTION AND USE OF ELEVATOR CONTROL 41

12.1 Introduction 41
12.2 Features 41

13. SPECIAL NOTE 43

13.1 Charge point deployment 43
13.2 Restricted usage scenarios 43
13.3 Faults that cannot be handled temporarily 44
13.4 Notes 44

14. MAINTENANCE 46

15. COMMON FAULTS AND TROUBLESHOOTING 47

16. PRODUCT EXECUTIVE STANDARDS AND CERTIFICATES 48

16.1 Product executive standards 48
16.2 Certificate 48

Copyright 2016-2021 Shanghai Slamtec Co., Ltd.

1. Introduction

Developed by Slamtec, Hermes is a scalable and low-cost robot platform capable of meeting the needs of small-to medium-sized robot application development in areas such as smart patrol robots, container transportation robots, hotel delivery robots, food delivery robots, and more. Based on the original standard chassis, this model can meet users' needs for directly connecting to 48V high-power electrical equipment.

Autonomous Localization and Navigation

The built-in SLAMCUBE autonomous localization and navigation system kit enables path-finding and localization and navigation features to help robots figure out where they are, where they should go, and the best way to get there. Hermes is capable of performing a variety of tasks across different commercial environments.

Multi-Sensor Data Fusion

Multi-sensor data fusion technology is an effective way to improve the sensing capability of robotic systems. Hermes uses multi-sensor data fusion technology to effectively realize high degrees of autonomy and awareness in unpredictable environments. Fitted with equipment such as lidar, magnetic sensors, depth cameras, and bumper sensors, Hermes can implement autonomous mapping, localization, and navigation by flexibly responding to complex and ever-changing operational environments.

Copyright 2016-2021 Shanghai Slamtec Co., Ltd.

2. Introduction to Hermes Features

2.1Autonomous Path-Finding

The built-in SLAMCUBE autonomous localization and navigation system kit enables path-finding and localization and navigation features to help robots figure out where they are, where they should go, and the best way to get there. Hermes is capable of performing a variety of tasks across different commercial environments. Hermes is capable of autonomous localization and path-finding in accordance with task target points, implementing autonomous movement.

2.2Robot Collaboration

Hermes supports multi-robot collaboration to meet the needs of multi-task operations in complex environments during peak periods. Hermes supports local area network (LAN) and cloud platform collaborative operations, along with the dynamic adjustment of both speed and delivery routes in accordance with the environment to realize efficient, safe, and reliable multi-point delivery.

2.3Cross-Floor Delivery

The Smart Elevator Control 3.0 system provides accurate detection of elevator statuses along with call-control functionality to provide efficient and reliable solutions that help hotel delivery robots autonomously navigate elevators in cross-floor scenarios. Through our API interfaces, Smart Elevator Control 3.0, as a relatively independent set of solutions, can also be integrated with other smart devices or third-party applications to meet the differentiated customization needs of customers.

2.4Smart Obstacle Avoidance

The multi-sensor fusion technology of Hermes provides rapid and accurate identification of surrounding active environments, enabling smart obstacle avoidance and greatly reducing the chances of safety incidents.

2.5Comprehensive Safety

Hermes uses multi-sensor fusion methods such as dual-depth magnetic sensors, bumper sensors, and lidar to accurately identify and avoid both moving and static obstacles. The robot also supports fall avoidance, collision avoidance, and emergency braking functionality to ensure comprehensive safety during the move process.

2.6Autonomous Recharging

Sufficient power is ensured for Hermes to complete assigned tasks smoothly. Hermes automatically returns to the charging station when its battery charge falls below a configured threshold.

Special note: the automatic recharge function cannot be triggered only under the condition of that combined with upper machine with delivery and disinfection plug-in or customized models.

Copyright 2016-2021 Shanghai Slamtec Co., Ltd.

2. Hermes Schematic Diagram

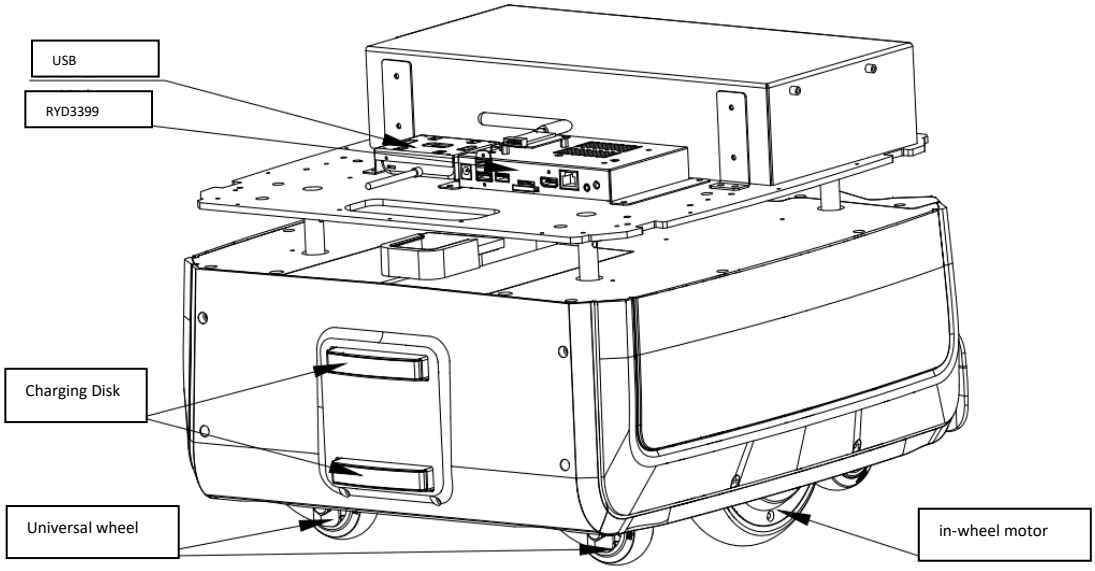

4. Hermes Charging station

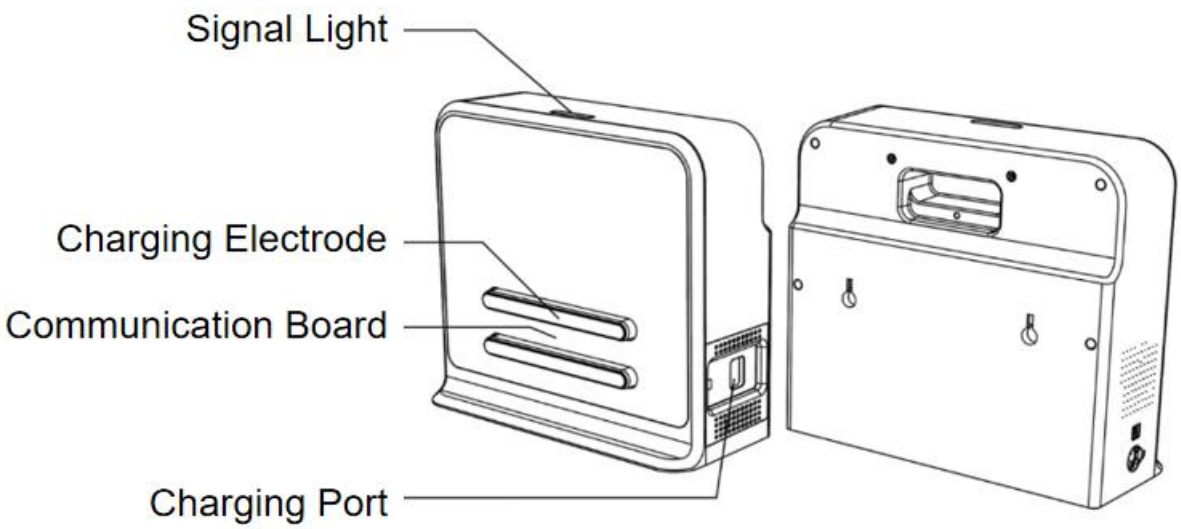

Automatic
Charging Electrode

Copyright 2016-2021 Shanghai Slamtec Co., Ltd.

5. Parameters

Model		Hermes Robot Base	
Core Feature		SLAMWARE™ Localization and Navigation	
Features		Metric	Value
Dimension and Weight		Length × Width	465mm*545mm
		Height	365mm（excludes controller）
		Net Weight	60kg
		Rated Load	50kg
		Max Load (Flat Concrete Surface)	80kg
	LIDAR	Model	RPLIDAR S2（Dtof）
Sensor Performance		Scanning Radius	0.05-30m (90% reflectivity, white objects) 0.05-10m (10% reflectivity, black objects)
		Distance Accuracy	±30mm
	Depth Camera	Quantity	2
		Detection Range	0.3m –2m

Copyright 2016-2021 Shanghai Slamtec Co., Ltd.

		Field of View (FOV)	H:117±3°; V:70±3°
	Low Obstacle & Cliff Detection Sensor	Quantity	1
		Minimum Detection Height for Low Obstacles	>3cm
	Precise Docking of Cameras	Docking Accuracy	±1.5cm
		Docking Angle	±1.0°
	Magnetic Sensor	Quantity	2
		Max Detection Range	35mm
	Bumper	Quantity	2
		Trigger Mode	Physical Collisions
		Detection Range	0.3-0.5cm
		Detectable Minimum Force	8N
Mapping performance		Map Resolution	50mm
		Max Mapping Area	300m x300m （5cm map resolution）

Copyright 2016-2021 Shanghai Slamtec Co., Ltd.

	Maximum Operating Area	100,000 ㎡ (5cm map resolution)
Mobility Performance	Maximum Moving speed	1.2m/s (Customizable to 1.5m/s)
	Default Moving Speed	0.7m/s
	Max Cross Slope	10° Slope: Max slope angle of chassis: 10°; Slope = 18% × Ramp; The height of the full-machine mass center is within 18 cm, and the safety ramp within 10°. (A 100% slope means a 45° ramp, whose height difference for 100 m is 100 m.)
	Vertical Crossing Height	2cm (Full-load)
	Horizontal Crossing Width	4cm (Full-load)
	Min Path Width (robot base)	75cm
	Alignment Accuracy (AVG)	±5cm

Copyright 2016-2021 Shanghai Slamtec Co., Ltd.

		Alignment Accuracy (MAX)	±8cm
		Min Point to Point Angle	±3.0°
		Multi-Robots Obstacles Avoidance	Supports up to 3 robots in the same scene
			LORA Module（Standard）
Wheelset		Wheelset Parameters	7NM 6.5 Inch In-Wheel-Motor*2 2.5 Inch Industrial Universal Wheel*2；3 Inch Auxiliary Wheel*2（Front）
User Interface	Hardware Interface	Power Connector	DC 24V 10A DC 48V 30A
		4G	Support 4G module (paid customization)
		HDMI	1*HDMI
		Audio	1 × 3.5mm headset socket
			1 × LINE_OUT audio jack
	Network Interface	Ethernet	Ethernet；1*RJ45 Gigabit Ethernet port
		Wi-Fi	2.4GHz/5GHz

Copyright 2016-2021 Shanghai Slamtec Co., Ltd.

	Software Interface	SLAMWARE™	SDK2.0 HTTP APIs support different programming languages and platforms, such as Windows, iOS, Android, and Linux
Ethernet		Wi-Fi	Network environment without authentication
		4G	Supports 4G SIM cards from domestic and international carriers (customized according to needs)
Battery and Capacity		Capacity Specification	48V 30AH （Lithium Iron Phosphate Battery）
		No-load Operating Time	>20H（No-load，Ambient Temperature Environment）
		Full-load Operating Time	16H(80KG，Ambient Temperature Environment)
		Charging Time	3~3.5h
		Battery Life	2000times
Power Consumption		Standby Power Consumption	32W(No-load)

Copyright 2016-2021 Shanghai Slamtec Co., Ltd.

	Full-load Rated Power Consumption (80kg)	62W（Full-load）
	Max Power Consumption with External Load	1400W
Noise	Operating Noise Level	≤60db
Operating Environment	Operating Temperature	0℃ ~ 40℃
	Transport and Storage Temperature	-25-+55℃
	Operating Humidity	20 ~ 90%rh
	Operating Altitude	≤2000m

Charging station	
Name	Parameters
Size	360mm*160mm*320mm
Color	White
Rated input	100-240V 50/60Hz 7.5A MAX
Rated output	DC 51V 10A
Rated input frequency	50/60Hz

Copyright 2016-2021 Shanghai Slamtec Co., Ltd.

6. Instructions Of Hardware

6.1 Wire Instructions

Interfaces	Picture	Index	Function	Note
Power ON/OFF		--	Power switch of the entire system. Short press until the indicator light turns on power-on, long press until the indicator light turns off power-off.	--
Shut Down		--	Effectively control Hermes in an emergency. After pressing, Hermes will immediately shut down.	It is a switch that must be designed according to rigid regulations. If the switch is not designed, Hermes will refuse to run.
Brake		--	When robot is energized, press this switch to release the	Invalid if the robot is not turned on

Copyright 2016-2021 Shanghai Slamtec Co., Ltd.

			brake and you can push the robot freely; press it once again to brake, and the robot will not be able to push it freely.	
48V Power		Rated Voltage 48V Maximum current 30A	Maximum output power is 1400W, can be used to supply power to external devices	No overload
12V RYD3399 Power Supply Wire		Rated Voltage 12V Maximum Current 2A	Cube 2R supplies power to the RYD3399 development board.	
Depth Camera Interface		USB3.0	Connected to the RYD3399 development via USB3.0 to obtain information.	Need to pay attention to the left and right sequence.

Copyright 2016-2021 Shanghai Slamtec Co., Ltd.

Docking Camera		USB2.0	Connected to the RYD3399 development via USB3.0 to obtain information of code scanning camera.	Assist precise docking.
12V -DISP		Rated Voltage 12V (See the figure below for the design drawings)	12V working power of Cube 2R to provide the external display screen of human-computer interaction.	Maximum current 2A
USB-BASE		USB2.0	Used for communication between 3399 and Cube 2R.	Connect to Hub3.0

Design drawing of 12V -DISP terminal

Copyright 2016-2021 Shanghai Slamtec Co., Ltd.

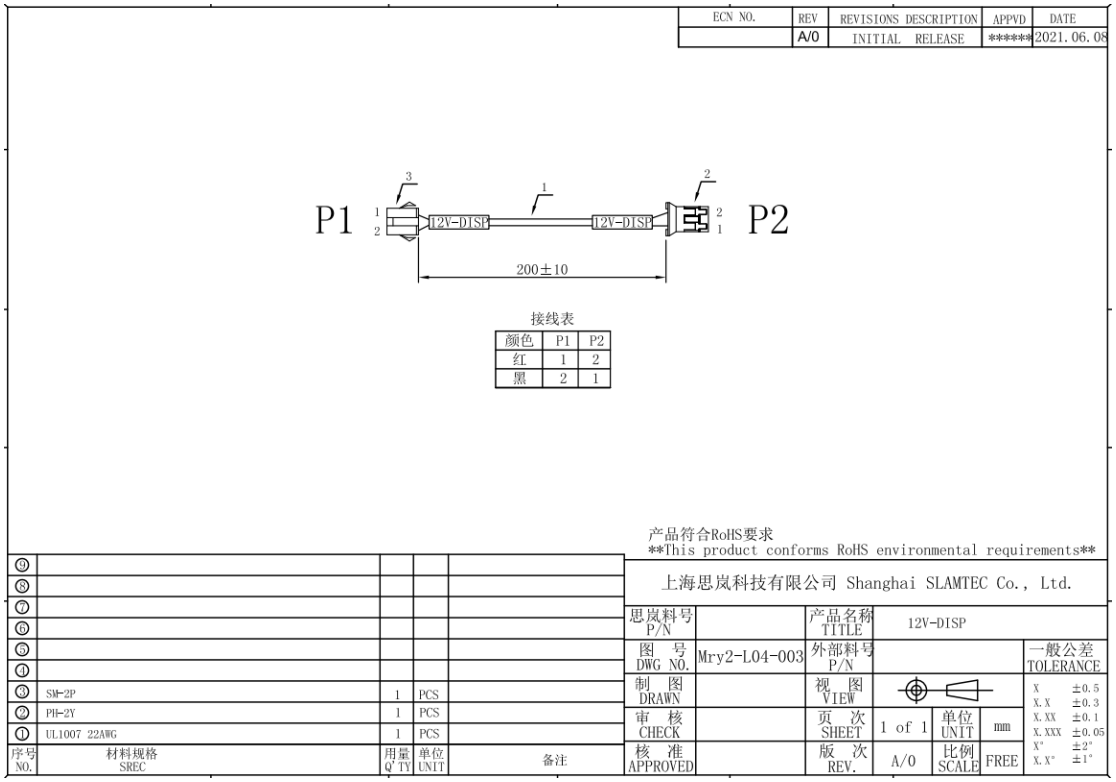

6.3 Reference of Hardware Design

Notice:

(1) Before starting, please read the manual carefully to avoid product damage caused by misoperation;

(2)The working temperature of the main board is 0℃ to +40℃, 30%-70%RH, in order not to damage the product due to excessive cold/heat or moisture;

(3) Do not make strong mechanical movement of this product, and operate this product before static protection is done;

(4) Please turn off the power before installing any external cards or modules;

(5) Please ensure the external power supply is DC 12V to avoid damage to the main board;

6.3.1 Product Description

RYD-3399 is an ARM-based multi-function board powered by Rockchip RK3399 ARM Dual core Cortex-A53 high-performance processor, and supports 4K display4G/5G connectivity.RYD-3399 also provides rich interfaces, such as LVDS10/100/1000M ethernet and 7 x GPIO.

6.3.2 Product specifications

（1） Hardware Specification Sheet

Copyright 2016-2021 Shanghai Slamtec Co., Ltd.

Processor	CPU	Rockchip RK3399 ARM Dual-core Cortex-A72 and Quad-core Cortex-A53,up to 1.8 GHz
Memory	DDR	4GB LPDDR3,2G/4G(optional)
	Flash	16GB eMMC Flash(Default),8GB/16GB/32GB/64GB/128GB(optional)
	SD	1xTF card storage expansion socket
Multimedia	H/W Video Codec	Decoder: 4K 60fps H.265/H.264/VP8;Encoder:1080P30fps H.265/H.264
Network	Ethernet	1x10/100/1000Mbps
	WiFi+BT	Configurable,IEEE 802.11 b/g/n 2.4G,Supports BT4.2,BLE
	4G	Mini-PCIe 4G module interface
Graphics	eDp	1,max 1080p
	LVDS	1xDual Channel LVDS,max 1920x1200
	MIPI	2,max 1080p (reserved)
	HDMI	1xHDMI Type A, max 3840 x 2160@60Hz
	The display interface can meet diversified combinations, and can support dual-screen different display output	
Video input	MIPI	1xMIPI CSI(reserved)
Other	Support RTC function and timing boot, can be connected to CR2032 button battery; support system Watchdog	
I/O	USB	6 x USB 2.0, 2 x USB3.0 (Contains OTG)
	Audio	1 x audio output (3.5mm audio port), support left and right channel output,2*5W8R
	Serial Port	2 x RS232,1 x RS485(Optional for TTL serial port),2 x ttlSerial Port,1 x ttlDebug serial port
	SPI	1,Multiplexed with ttl serial port.
	GPIO/ADC	7 x GPIO (3.0V TTL level),1 x ADC
	I2C	1 x I2C(2.0mm-6pin),Can be connected to I2C touch screen;1 x I2C(2.0mm-4pin)
	Button and pilot lamp	1 x upgrade button (interface side), 1 x reset button (inside the board),1 x power button interface, 1 x working status indicator interface
Power	Power Supply Voltage	12V/24V DC-IN,5.5*2.1mm,The board can be connected to 4pin-2.5mm power socket
	Power Type	DC-IN or power socket (optional)
Environment	Operating emperature	0 ~60°C (-20 ~ 85 °C optional)
	Operating Humidity	5% ~ 95% relative humidity,non-condensing
Mechanical	Radiating	Standard28mm*28mm*6mm
	Dimensions (W x D)	146 mm x 100 mm
Operation System	Android/Debian/Ubuntu	

（2）Size of main board

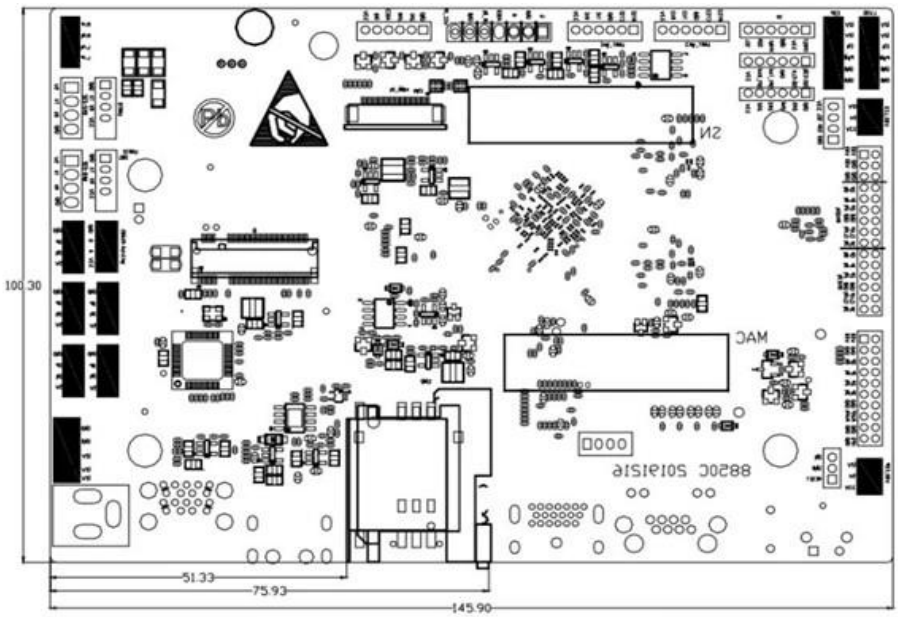

Unit: mm

Copyright 2016-2021 Shanghai Slamtec Co., Ltd.

6.3.3 Introduction of Interfaces

（1） Front view of main board

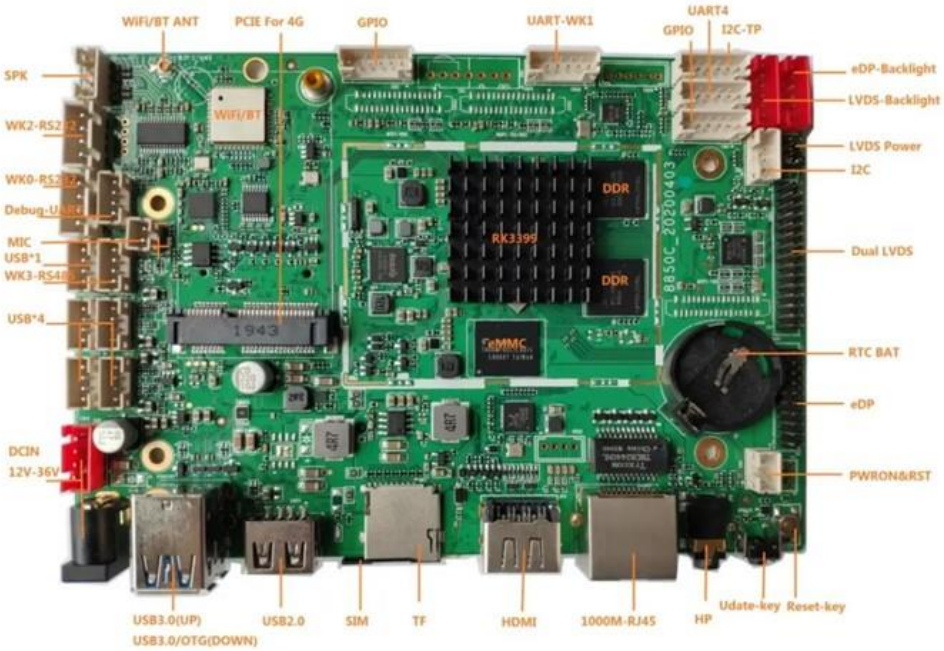

（2） Front IO diagram of the main board

Caution： The identification method of the first pin on the main board is: 1 has a white and bold silkscreen; 2 the pins seen on the back of the main board are square holes.

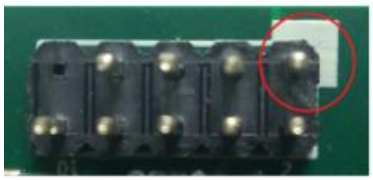

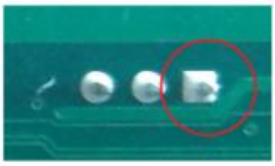

7. Reference of Structure Design

7.1 Installing Interface of Host Computer

Copyright 2016-2021 Shanghai Slamtec Co., Ltd.

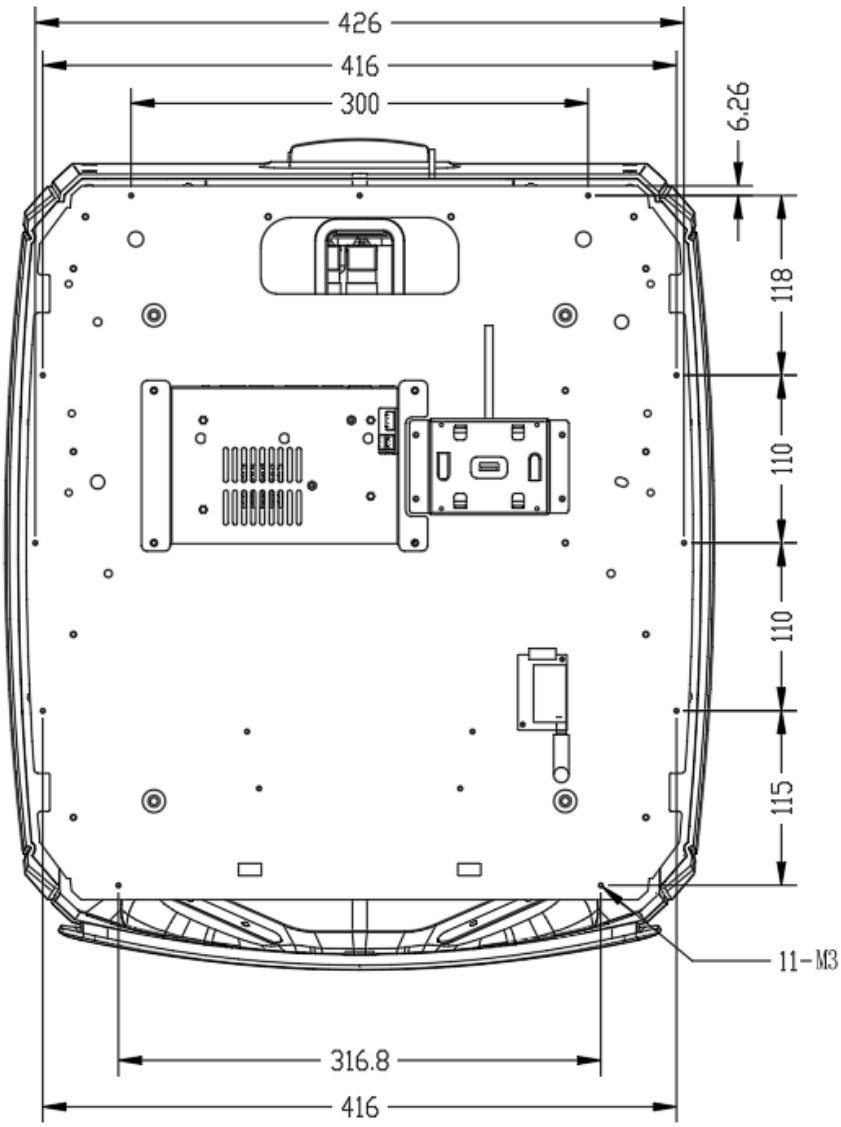

Copyright 2016-2021 Shanghai Slamtec Co., Ltd.

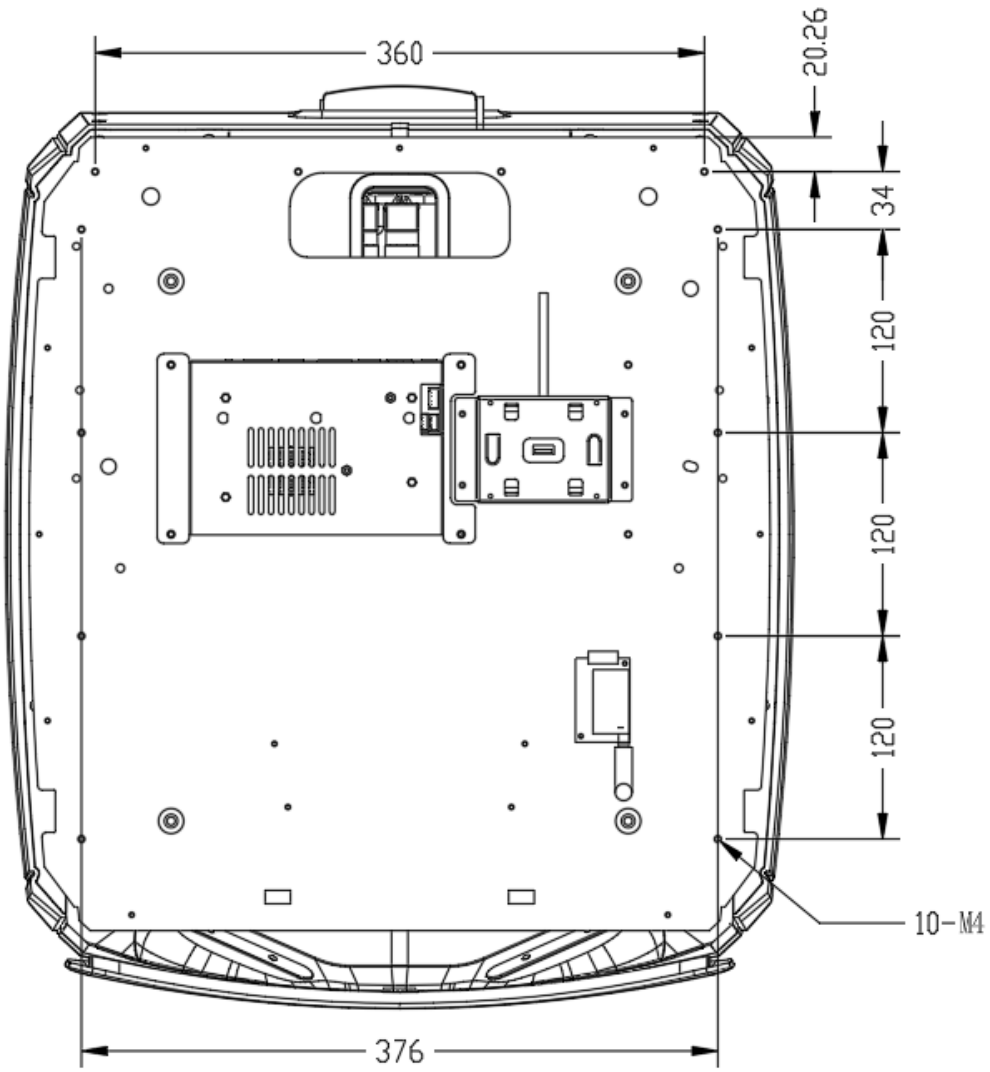

As shown in the figure above, there are a total of 11 M3 threaded holes and 10 M4 for the installation and fixation of the host computer.

It is recommended to use M3 screws with spring washer and blue anti-loosening glue.

7.2 Instruction of Load Limit

Copyright 2016-2021 Shanghai Slamtec Co., Ltd.

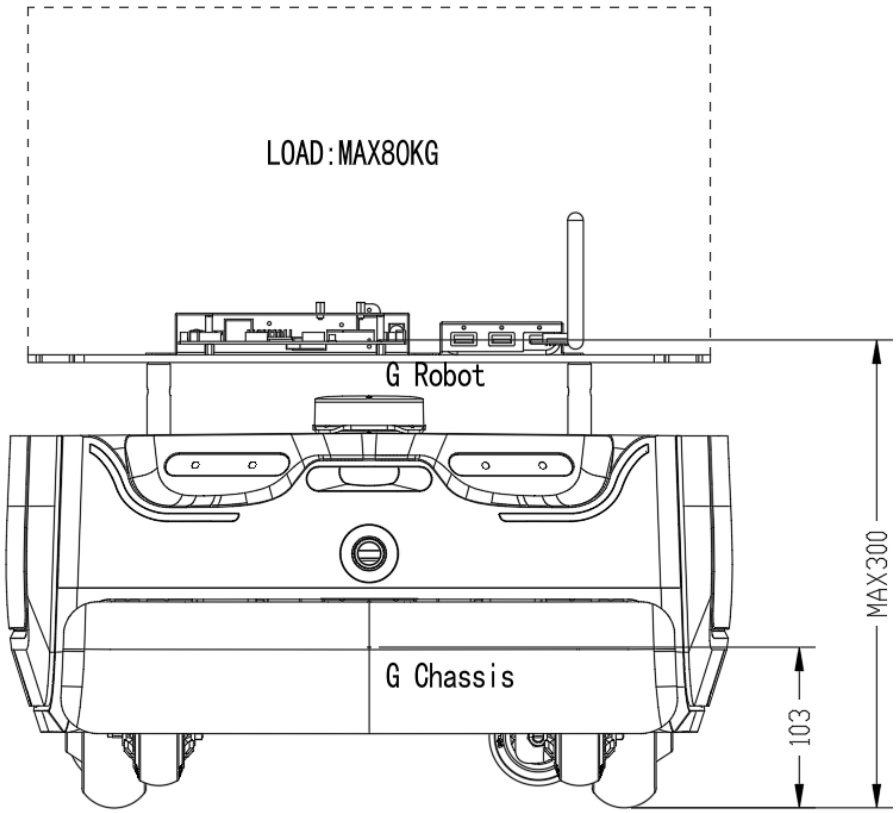

(1) Maximum load of host computer is 80 kg , Rated load is about 50kg.

(2) * It is recommended that the center of gravity of the whole machine is not higher than 300mm from the ground during installation.

i. *The center of gravity of chassis is the one which Slamtec provides, the height is 103 mm;

ii. The center of gravity of the whole machine is the overall center of gravity of the chassis plus the robot;

iii. If the center of gravity of the whole machine exceeds 300mm, the slope-climbing and obstacle-crossing performance may be reduced.

7.3 Lidar Clearance Area

Copyright 2016-2021 Shanghai Slamtec Co., Ltd.

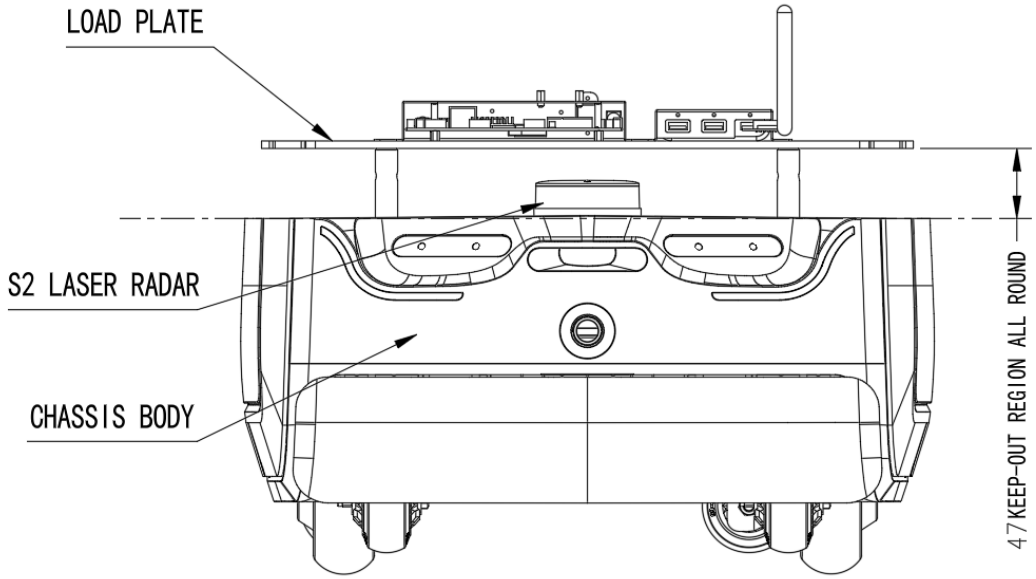

There is a lidar between the chassis body and the host computer, which requires a certain clearance area to avoid being shielded or interfered;

The boundary of the host computer cannot exceed the lower boundary line of the host computer as shown in the figure.

7.4 Deep Camera Clearance Area

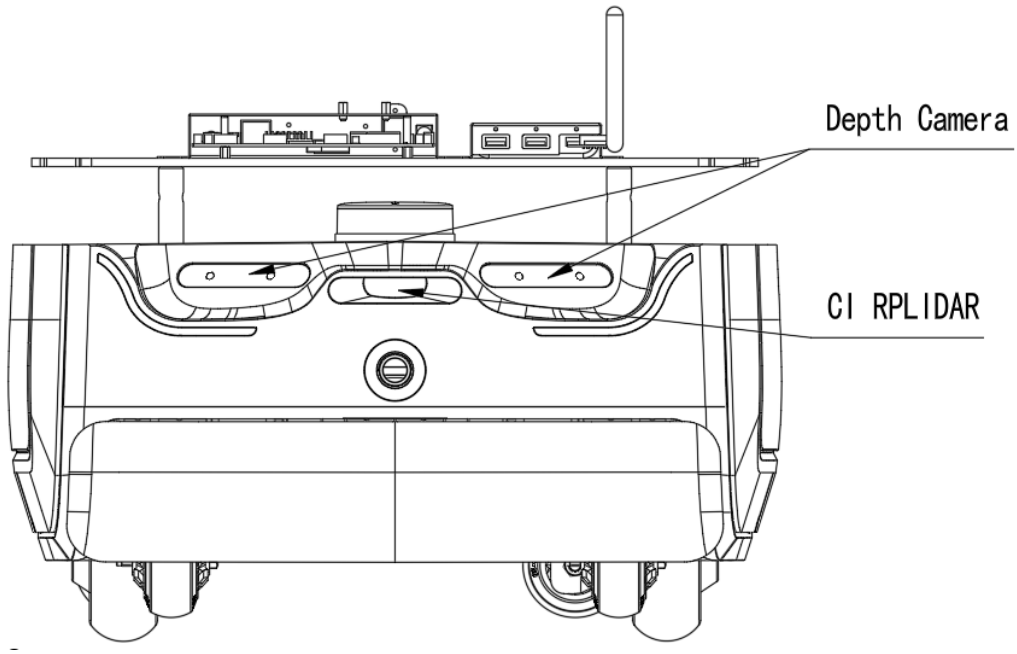

Copyright 2016-2021 Shanghai Slamtec Co., Ltd.

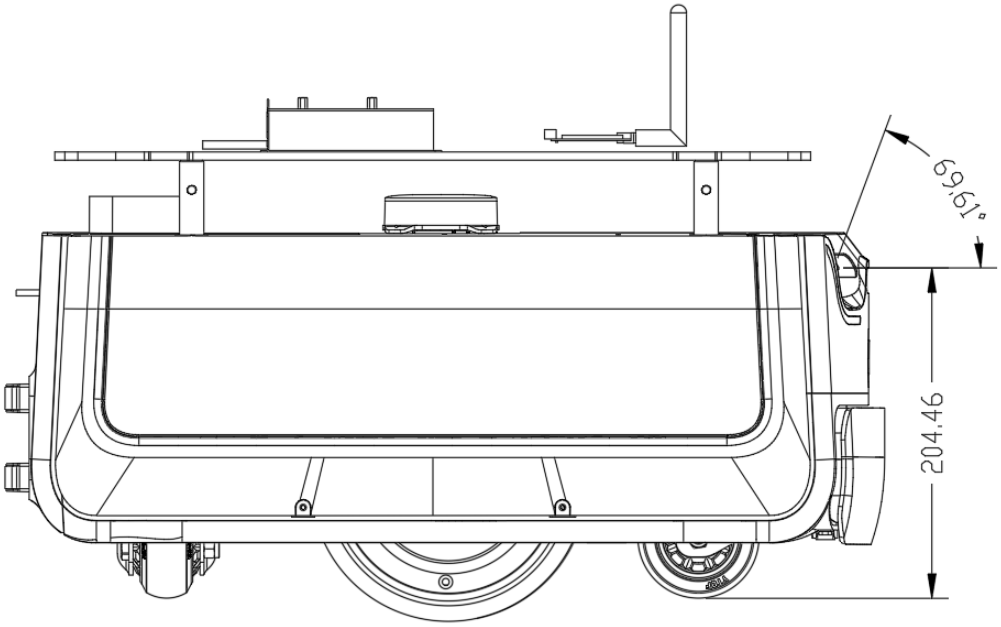

There is a deep camera on the chassis, which requires a certain clearance area to avoid being shielded or interfered;

The host computer cannot exceed the clearance area as shown in the figure. Due to the angled layout of the dual cameras, the superimposed clearance area is larger than a single FOV.

8. Setup Instructions

8.1 Opening

1. After receiving the Hermes machine, please check whether the packing box is intact as shown in the left picture, and whether the box on the right side of the Hermes sample of the outer box is checked. After confirming that the packing is complete and the box contains Hermes, use packing pliers to cut the packing tape, remove all packing straps and paper corners, it should be shown as on the right picture.

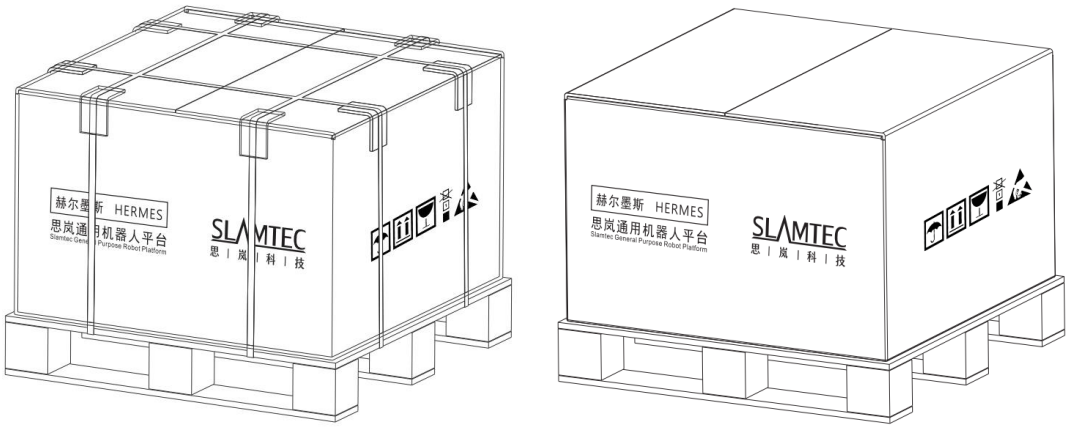

8-1 Hermes unpacking

8.2 Placing Charging Base

Copyright 2016-2021 Shanghai Slamtec Co., Ltd.

Hermes can be charged by returning to the charging base automatically, so the position of the charging base will affect the automatic return charging function of Hermes. When Hermes returns to the charging station, it will generate propelling force. Therefore, it is best to place the charging station with its back against the wall. The wall must meet the following conditions:

a. The charging base must be attached to the wall, without no obstacle in the middle, try to avoid the wall with skirting, etc.

b. The wall material cannot be high-permeability materials, such as mirror or glass

c. The wall width needs to be at least three times wider than the width of the charging station

d. The wall must be a straight wall, not a curved wall

The charging base needs to be connected to a 220V power supply. The length of the external power cord of the charging base is 1.5m. Therefore, it is necessary to ensure that there is a 220 V interface within 1.5m of the wall against which the charging base rests. The ground wiring harness is messy causing unnecessary trouble).

The ground in front of the charging base must meet the following conditions:

a. Open, with no obstacles within a radius of 2m in front of the charging station as the center of the circle

b. Plane, no slope

c. The ground cannot be covered with soft carpet that causes Hermes to sink more than 2cm

To ensure that Hermes automatically returns to the charging function, it is necessary to ensure that Hermes always starts from the charging base.

Note: If you want to change the position of the charging station, you need to set the corresponding setting according to the position you need when loading the map. For detailed operations, please see the SDK corresponding interface operation document.

8.3 Power ON/OFF

Power on: if the machine is not in the position of charging station, long press the power switch until the power switch indicator lights up and release it. The machine system enters the startup process, the front light strip lights up, and the wheel hub is in the brake state, indicating that the startup is completed.

If the machine is in the position of charging station, short press the power switch until the power switch indicator lights up and then release it. The machine system enters the startup process, the front light strip lights up, and the wheel hub is in the brake state, indicating that the startup is completed.

Power off: long press the power switch until indicator light goes out, then release it, the machine enters the shutdown process, the light strip on the front of the machine goes out, and the machine can be pushed arbitrarily, indicating that the shutdown is completed.

8.4 Charging

Copyright 2016-2021 Shanghai Slamtec Co., Ltd.

As shown in the figure below, align the charging piece of the machine with the charging electrode of the charging station. After waiting for 10 seconds, the front light strip of the robot lights up, the wheel hub enters the braking state, and the breathing light of the charging station flashes, indicating that charging has started.

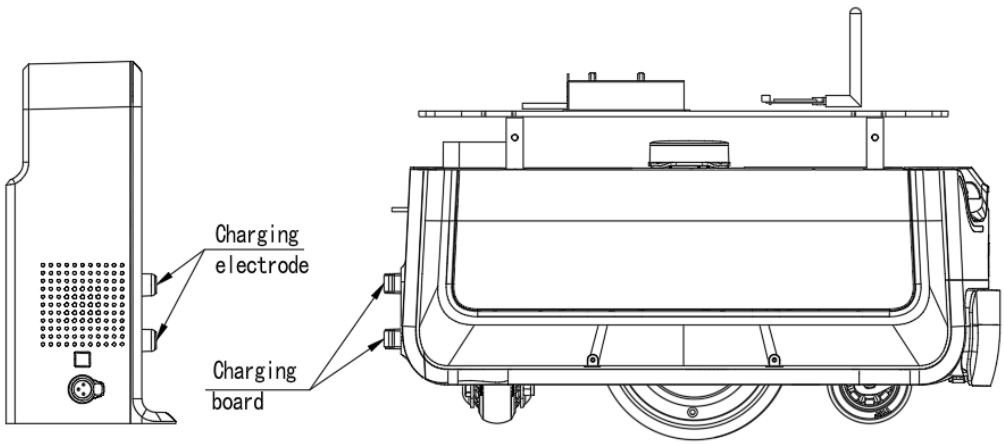

8-2 Hermes charging

8.5 Emergency stop & brake and reset

（1） Emergency stop button

Press the emergency stop button, the Hermes machine will stop immediately, stop and no longer respond to any motion control commands, and the manual push is blocked.

Release the "emergency stop button " and the machine can return to normal working conditions.

(2) Brake button

Press the "brake button", the Hermes machine will stop immediately, stop and no longer respond to any motion control commands. The machine can be pushed manually, such as pushing it to the charging station.

Release the "brake button", the machine can return to normal working condition, and the manual push is blocked.

8.6 Map Building and Upload

Download and install the robot graphical control management tool Robot Studio from our official website http://www.slamtec.com/cn/RoboStudio to adjust and use Hermes, sign up account and log in. In the menu-toolbar area, click "File-Robot" in turn, and a docking page named Robot will appear on the left side of the workspace, as shown in the figure below. The user connects/disconnects the robot through this page.

Copyright 2016-2021 Shanghai Slamtec Co., Ltd.

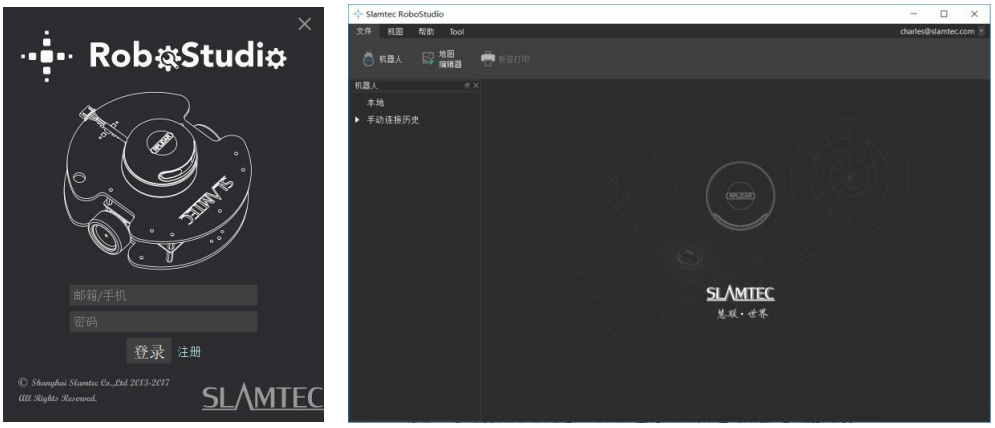

8-3 Rob Studio Robot page

Right-click the blank space of the robot list, click "Manually connect robots" in the pop-up menu, and the connect robot dialog box will pop up (as shown below). Enter the IP address and port number of the Hermes robot above and click the connect button to connect (This connection method is suitable for machines that have been assigned an IP address through the Web portal management backstage). When the computer has been connected to the SSID of the aforementioned Hermes robot through a network adapter (SSID can be viewed on the label of the machine), enter the IP address 192.168.11.1 by default (note that your wireless network adapter IP address should be set to automatically obtain it using DHCP).

8-4 Rob Studio Robot connecting page

When finishing connecting, the work area will display the robot, map information, and status information. In the robot page, you will find that the name of the connected device turns green, and the status is "Connected", as shown in the figure below.

Copyright 2016-2021 Shanghai Slamtec Co., Ltd.

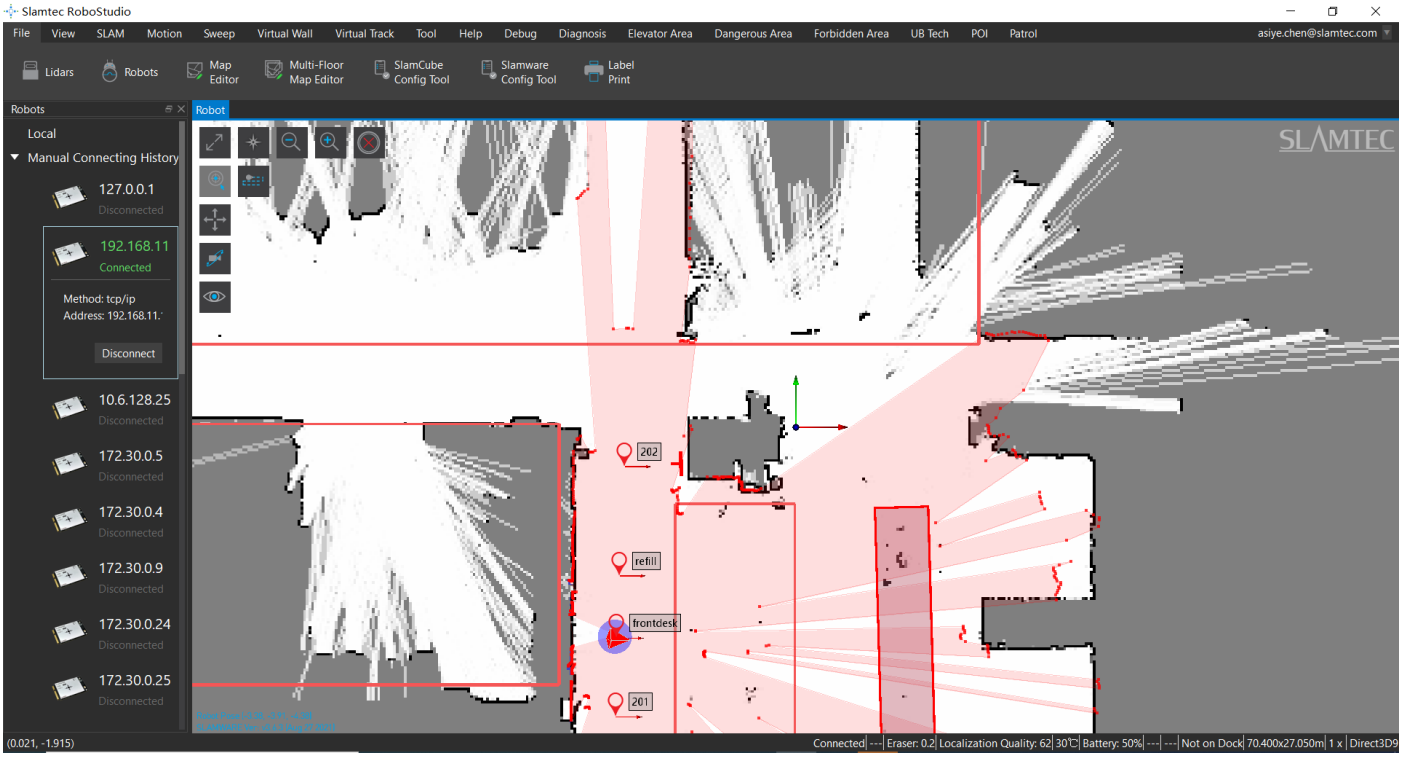

8-5 Rob Studio Robot connecting page

Left click the spot inside the map-building area, let Hermes build the map. When finishing, please use the virtual wall function to isolate the places that need to be isolated. Then click "File-Map Editor" in turn, choose to save the file or upload to the firmware to save the map.

Copyright 2016-2021 Shanghai Slamtec Co., Ltd.

8-6 Rob Studio Robot map-editing page

There is a difference between the functions of restricted areas and virtual walls.

Restricted Area: When the Athena 2.0 is accidentally pushed into the restricted area, the Athena 2.0 machine can be automatically freed from the restricted area by giving a random point in RoboStudio.

Virtual Wall: When a human accidentally pushes Athena 2.0 into the virtual wall, the Athena 2.0 machine cannot automatically get out of the virtual wall and needs to be pushed out by a human at a random point in RoboStudio.

The Forbidden Area management function relies on the Slamware Forbidden Area plug-in. Slamware Forbidden Area is a public plug-in, the computer is connected to the Internet, after logging in RoboStudio, click Tools -> Plug-ins -> Shop -> All ->Slamware Forbidden Area-> Get -> Download -> Restart RoboStudio.

Public plug-in links：

https://wiki.slamtec.com/pages/viewpage.action?pageId=56164379)

Copyright 2016-2021 Shanghai Slamtec Co., Ltd.

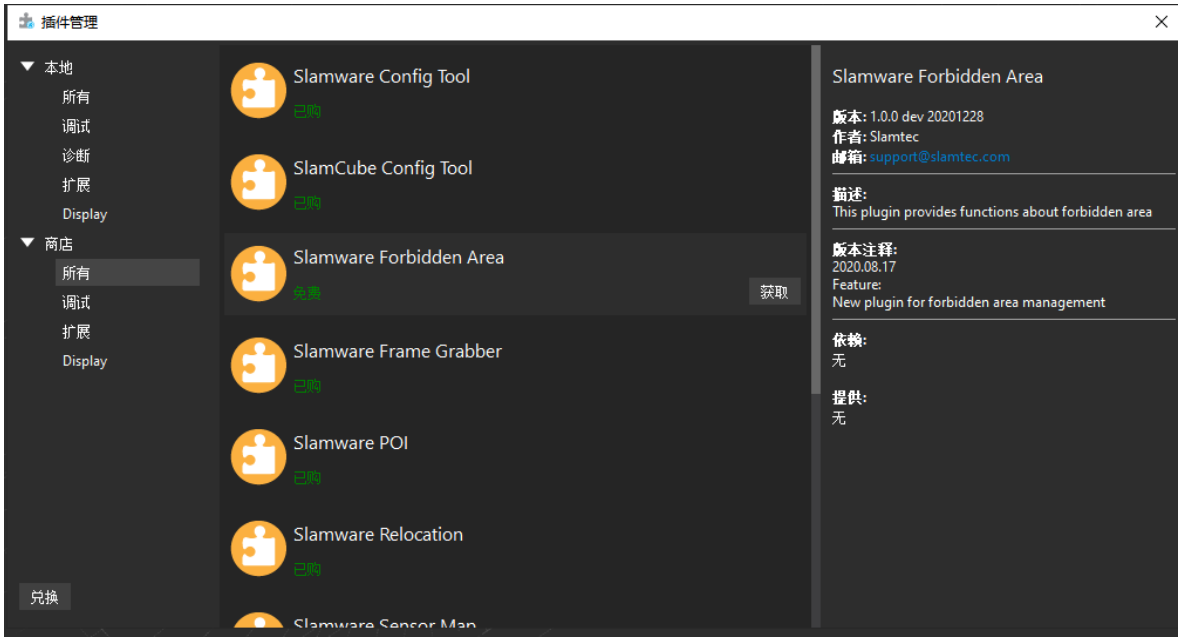

8-7 RoboStudio Public plug-in

After the plug-in runs normally, connect to the machine, you can see the "Ban zone" toolbar in the menu bar.

8-8 RoboStudio No-go areas

8.7 Host Computer Completes Startup and Loading The Map

Below is a reference example of how to use the SDK to complete the startup and loading of a specific map on the host computer.

```
/*
 * upload map file
to Hermes */
#include <iostream>
#include <rpos\robot_platforms\slamware_core_platform.h>
#include <rpos\robot_platforms\objects\composite_map_reader.h>
#include <rpos\core\pose.h>

using namespace std;

int main()
{
    try
    {
        string map_path = ".\\map.stcm"; //the path of map
        string Hermes_ip = "192.168.11.1"; //the ip of Hermes
        int Hermes_port = 1445; //the port of Hermes ,default is 1445

        rpos::robot_platforms::SlamwareCorePlatform Hermes =
            rpos::robot_platforms::SlamwareCorePlatform::connect(Hermes_ip, Hermes_port);
```


Copyright 2016-2021 Shanghai Slamtec Co., Ltd.

```
        //connect to the Hermes
        rpos::robot_platforms::objects::CompositeMapReader cmapreader;
        //map reader
        rpos::core::Pose Hermes_pose = rpos::core::Pose(rpos::core::Location(0, 0, 0));
        //the Hermes pose in map(Hermes_pose should be the Hermes's real pose in new map)
        //using Hermes.getpose() to get the old Hermes pose
        auto map = cmapreader.loadFile(map_path);
        //load map
        Hermes.setCompositeMap(*map, Hermes_pose);
        //set compositemap
        rpos::core::Pose home_pose = rpos::core::Pose(rpos::core::Location(0, 0, 0));
        //the home pose in map(home_pose should be the home's real pose in new map)
        //using Hermes.gethomepose() to get the old home pose
        Hermes.setHomePose(home_pose);
        //set home pose
    }
    catch (rpos::robot_platforms::ConnectionFailException &e)
    {
        cout << "connect failed on " << e.what() << endl;
    }
    catch (rpos::system::detail::ExceptionBase &e)
    {
        cout << "failed on " << e.what() << endl;
    }

    return 0;
}
```

Further motion deployment details, please see the SDK instruction document

Copyright 2016-2021 Shanghai Slamtec Co., Ltd.

9. Connection to Computer

【Step 1】The hotspot of the computer connected to the chassis

HERMES's hotspot is auto-started by default， the hotspot format is: SLAMWARE-XXXXXX

Hot spot identification method: query the last six digits of the SSID in the chassis label.

9-1 Chassis label SSID

For example, if the label SSID: Robot- E2A29E, the hot spot of this Chassis is SLAMWARE- E2A29E

【Step 2】Download and install Slamtec RoboStudio from the official website of Silan

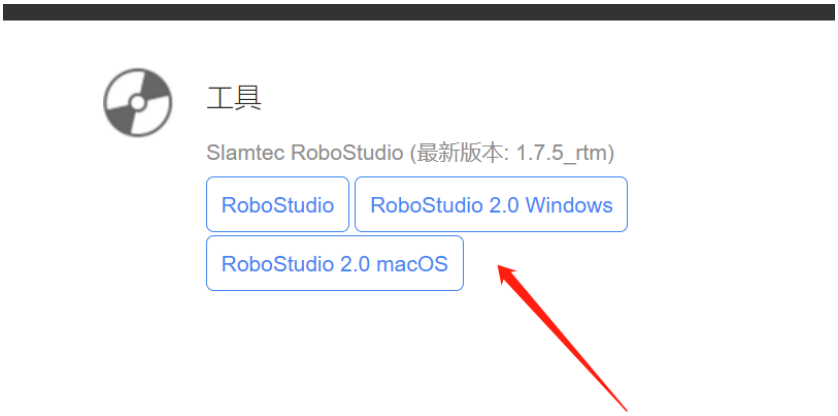

9-2 Official Slamtec RoboStudio

If you downloaded slamtec robostudio, After logging in to RS, click the "Robot" option and manually connect the robot with the right mouse button.

[step 3] if you downloaded slamtec robostudio, run "robostudio.exe", enter the interface of slamtec robostudio, enter the IP address and port, click "connect", and RS login succeeds.

Copyright 2016-2021 Shanghai Slamtec Co., Ltd.

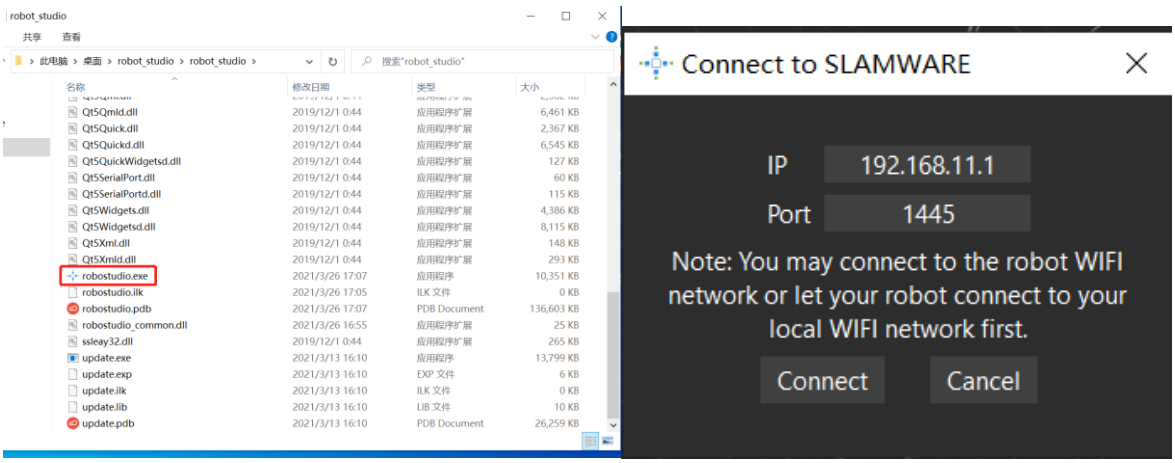

9-3 Robo studio login screen

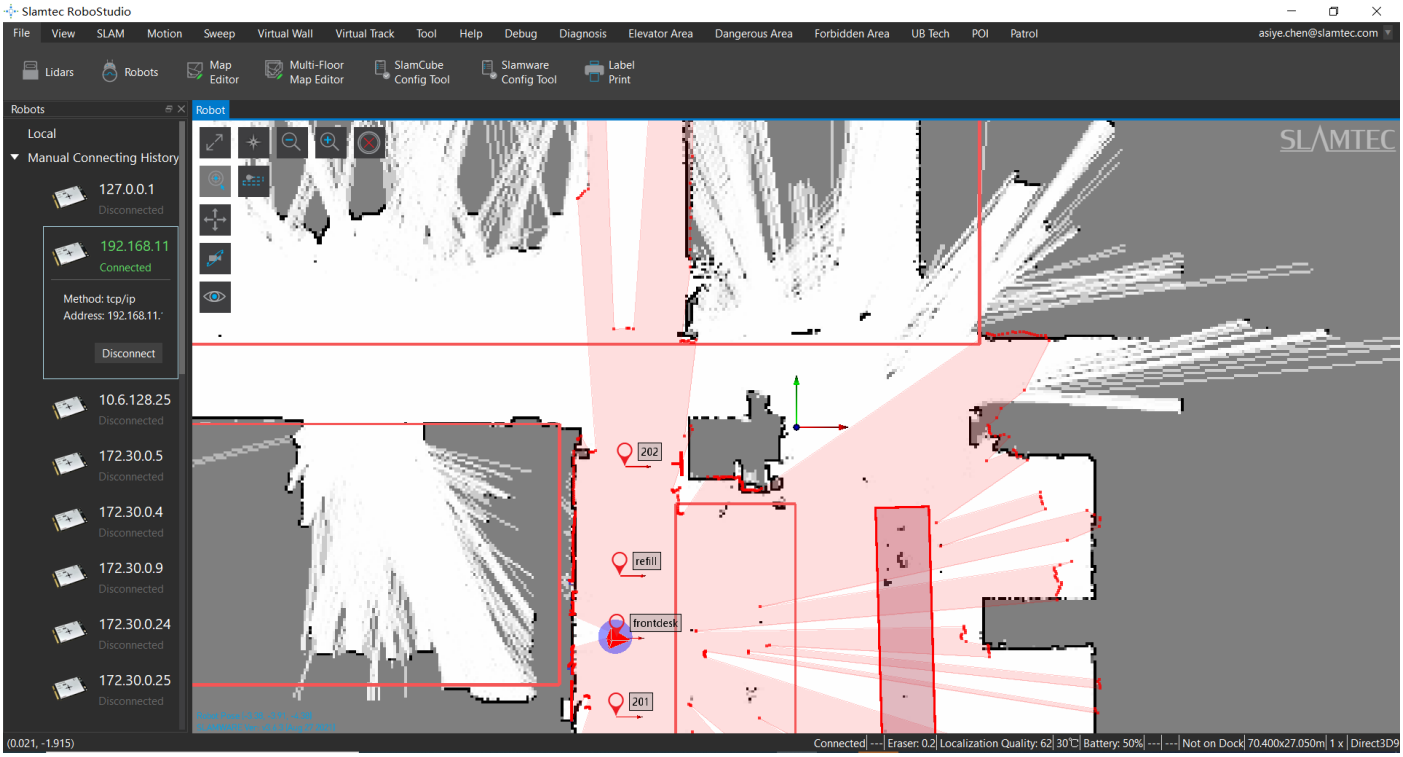

9-4 Robo studio interface

Note : The method of IP address query is to press the shortcut key, Windows+R, and enter the code ipconfig. Copy the IP of the default gateway and paste it into the IP address box of Slamtec RoboStudio. Click Connect to enter Slamtec RoboStudio.

Copyright 2016-2021 Shanghai Slamtec Co., Ltd.

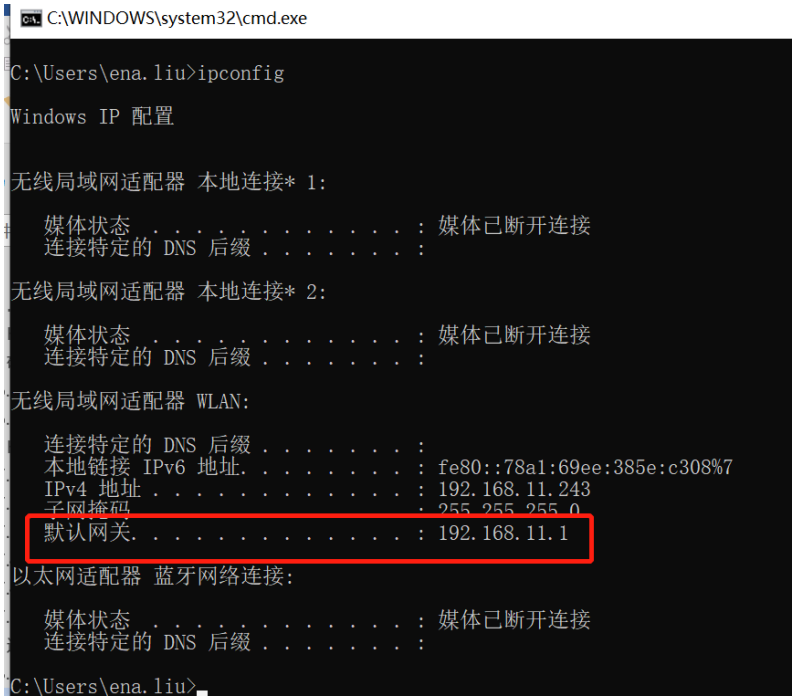

9-5 Method of obtaining an IP address

Copyright 2016-2021 Shanghai Slamtec Co., Ltd.

10. Adjusting Tools

10.1 RoboStudio

RoboStudio graphical tools are used to adjust and use Hermes, please download and install it from our official website: http://www.slamtec.com/cn/RoboStudio , and coming with manual to introduce those features.

10.2 Web Management Backstage

In the process of developing, adjusting and using SLAMWARE equipment, various operations can be performed on the equipment through the web management backstage, such as viewing basic information, updating the version, configuring WiFi,etc. (Default username: admin, default password: admin111)

Currently, web management backstage supports following functions:

1. Check basic information of the device

2. Restart the module

3. Update the firmware

Slamtec will regularly provide Hermes firmware updates and upgrades. You can easily upgrade the firmware for Hermes through the management backstage. Please obtain the latest firmware from sales or technical support personnel. The update process will last 5-10 minutes. The buzzer of Hermes will continue to sound during the update, and Hermes will automatically restart after the update. Before that, please make sure that Hermes has sufficient power.

4. Configuring WIFI

5. Start the SLAMWARE Core diagnostic mode

6. Modify the administrator password

More details on usages please refer to：

https://wiki.slamtec.com/display/SD/SQ001+SLAMWARE+Web+Portal+Function+Overview

Copyright 2016-2021 Shanghai Slamtec Co., Ltd.

11. Developer Tools

11.1 Start Using

The Agent SDK of the Hermes chassis is developed based on the C++ language to reduce user access costs and improve the robustness of the SDK. At the same time, it has strong compatibility and supports multiple languages such as Java, C++, C, and Kotlin. The following is a detailed introduction to the relevant examples and usage guidelines of the Agent SDK call based on the Hermes chassis.

11.2 Inter-system Adjusting Framework

Robot App controls the robot's positioning, movement, and return to piles through communication; at the same time, Robot App sends instructions to the robot according to various business scenarios, and Robot Agent will provide data interfaces, task operation interfaces, and business services to Robot App.

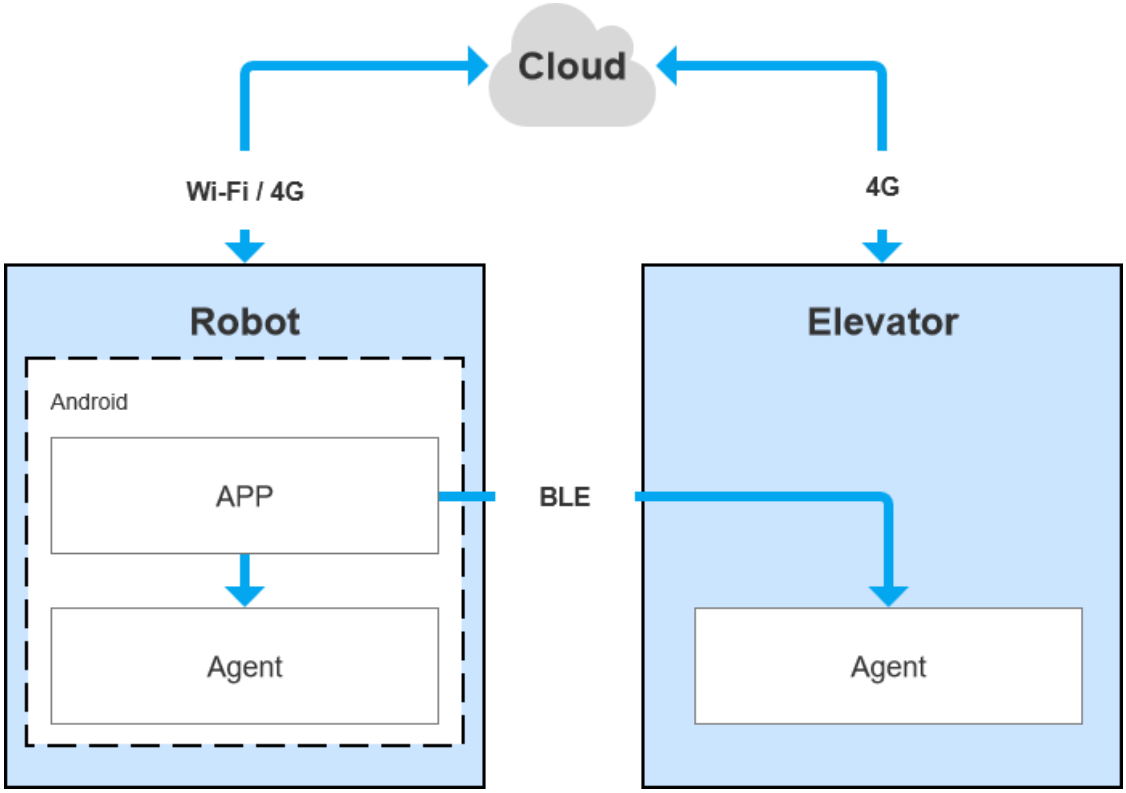

11-1 COMMUNICATION BETWEEN EACH SYSTEM OF HERMES

11.3 Instructions of Each System

11.3.1 Robot Agent

Robot Agent is a service program running on the Hermes chassis, through which the cloud and the elevator control terminal communicate with the elevator control equipment. Inside the Robot system, the Robot Agent communicates with the Robot App, receives instructions from the Robot App to control the Robot, and sends the Robot status at the same time.

The core function of Robot Agent is：

- ✓ Communicate with the Robot Cloud, Robot APP, send the Robot status and receive instructions

11.3.2 Elevator Agent

Copyright 2016-2021 Shanghai Slamtec Co., Ltd.

Elevator Agent is a service program running on the Linux system of the elevator control main control box. The cloud and the robot end communicate with the elevator control equipment through it. Inside the elevator control system, the Elevator Agent communicates with the Elevator Controller through UDP, sending elevator control instructions and obtaining elevator status.

The core function of Elevator Agent is：

- ✓ Communicate with the Robot Cloud, Robot APP, send the elevator status and receive instructions of elevator control
- ✓ Communicate with the Elevator Controller, receive the elevator status and send instructions of elevator control

11.3.3 Robot Cloud

Robot Cloud is a set of services provided to realize remote management, scheduling, and control of robots. It runs in the cloud and communicates with the robot at one end and the elevator control equipment at the other end. Therefore, elevator control is part of the function. Robot Cloud communicates with the Elevator Agent running on the main control box of the elevator control through the MQTT protocol.

Its core functions include:

- ✓ Send instructions, control the elevator to the designated floor
- ✓ Send instructions, control the elevator to open the door
- ✓ Send instructions, control the elevator to close the door
- ✓ Receive the up/down status of elevator
- ✓ Receive the current floor of the elevator

11.3.4 Robot App

Open-Source application – Restaurant Delivery App

The restaurant delivery app is a service program running on the robot. The application scene is a restaurant. It draws a map and loads it to the robot's local area through RoboStudio graphical tools. It is a universal application for human-computer interaction to achieve multi-point task delivery.

Copyright 2016-2021 Shanghai Slamtec Co., Ltd.

DEPLOYMENT

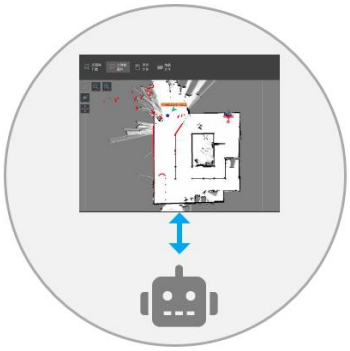

1. Personnel sketching map and load to the Robot

DELIVERY PROCESS

2. Restaurant waiter sets menu into the Robot

3. Waiter enters designated table number

4. Robot send items to the destination

Your order is here, please pick up one plate

5. Robot informing customer “Here’s your order!” when reaching destination

Delivery mission completed, please praise me!

6. Robot returning to picking up point and wait for another order

11-2 RESTAURANT DELIVERY BUSINESS FLOWCHART

Its core functions include：

- ✓ Get device battery percentage
- ✓ Get health status info of the device
- ✓ Get POI info
- ✓ Get password of the action
- ✓ Create new action
- ✓ Get current action
- ✓ Stop current action
- ✓ Shut down of restart Robot

11.4 Demonstrations of Code

Copyright 2016-2021 Shanghai Slamtec Co., Ltd.

1. The following is an example of the Robot APP calling the Robot Agent interface to check the battery status

GET http://127.0.0.1:1448/api/core/system/v1/power/status

The format of the returned data is application/json

```
interface AgentApi {
    /**
     * get方式调用 value: 接口地址
     * PowerStatus: 接口返回json格式对应的bean格式的data class的值
     */
    @GET("/core/system/v1/power/status")
    fun queryPowerStatus(): Call<PowerStatus>
}

/**
 * batteryPercentage : 90电池电量百分比, 0 ~ 100
 * dockingStatus :  对桩状态
 * isCharging : 是否正在充电...
 */
data class PowerStatus(
        val batteryPercentage: Int, val dockingStatus: String, val isCharging: Boolean,
        val isDCConnected: Boolean, val powerStage: String, val sleepMode: String
)

/**
 * retrofit接口代理类
 */
object AgentServiceCreator {
    fun <T> create(serviceClass: Class<T>, timeout: Long): T =
            Retrofit.Builder().baseUrl("http://127.0.0.1:1448/api/")
                    .addConverterFactory(GsonConverterFactory.create()).client(
                            OkHttpClient.Builder().retryOnConnectionFailure(true)
                                    .connectTimeout(timeout, TimeUnit.SECONDS)
                                    .addInterceptor { chain ->
                                        val originalRequest = chain.request()
                                        val requestBuilder =
                                                originalRequest.newBuilder().addHeader("Connection", "close")
                                        chain.proceed(requestBuilder.build())
                                    }.build()
                    )
                    .build().create(serviceClass)

}

//查询电量, 返回值为powerstatus
val powerStatus =  AgentServiceCreator.create(AgentApi::class.java, 1L).queryPowerStatus().await()
        Result.success(powerStatus)
```

2. The following is the Robot App calling the Robot Agent interface to make the robot move across floors

POST http://127.0.0.1:1448/api/core/motion/v1/actions

The request message format is application/json

Copyright 2016-2021 Shanghai Slamtec Co., Ltd.

```
{
    "action_name":"slamtec.agent.actions.MultiFloorMoveAction",
    "options":{
        "target":{
            "poi_name":"201"//表示前往名称为 201的poi
        }
    }
}// JavaScript Document
```

11.5 Details Of Robot API

FUNCTION OF MODULES	API LIST
Locate, map building-related functions	Get the Robot location
	Set the Robot location
	Get quality of location
	Whether support locating
	Start/Close locating
	Whether start map building
	Start/ pause map building
	Get location of power station
	Set location of power station
	Get current map
	Delete current map
Mark map elements manually	Get all virtual line segment
	Add virtual line segment
	Adjust virtual line segment
	Delete virtual line segment
	Delete virtual line segment
	Get all POI in current map
	Add POI
	Empty POI
	Find POI according to ID
	Modify POI
	Delete POI
Motion control of the Robot	Get all supported actions
	Get current action
	Stop current action
	Create new action
	Check action status
Firmware Upgrade	Get firmware upgrade process
Android application management	Get all custom installed apps
	Install APP

Copyright 2016-2021 Shanghai Slamtec Co., Ltd.

	Uninstall an APP
Multi-floor map and POI management, taking elevator, etc.	Move across floors
	Go back across floors
	Get all floor info
	Get floor info of floor of the robot
	Setup info of floor of the robot
	Get POI info
	Upload map to the robot
	Long-lasting save the map
	Reload the map
Delivery service-related interfaces	Get password of the action
	Set password of the action
	Get configuration info of the device
	Get setup info related to the delivery
	Check task info
	Create task
	Cancel all task
	Cancel some task
	Get current mission status
	Stop/ continue current mission
	Start picking up items
	End picking up items
	Get info of objects
	NOTE: delivery business please inform marketing department
Restaurant delivery service-related interfaces	Get the current battery percentage
	Get the health info of the device
	Get POI info
	Get password of the action
	Make up new actions
	Get current action
	Terminate current action
	Shut down or restart the robot

MORE DETAILS OF API: https://github.com/slamtec/HermesSampleApp

Copyright 2016-2021 Shanghai Slamtec Co., Ltd.

12. Introduction And Use Of Elevator Control

12.1 Introduction

12-1 INTELLIGENT ELEVATOR CONTROL DEVELOPED BY SLAMTEC

Intelligent elevator control, independently developed by Shanghai SLAMTEC CO., Ltd, can provide accurate detection of elevator status, program control call elevators, control elevators, combined with Mercury || hotel robots, helping the robots to take and exit the elevators autonomously. Providing reliable solutions to multi-floor operation scenarios. In addition to working with hotel robots, the product can be used as an independent set of solutions. Through the API interface we provide, this product can also interact with other smart devices or products to meet the different customization needs of customers. At the same time, the product can also be seamlessly connected to the Hermes chassis, to provide technical service support for more specific needs in other scenarios.

12.2 Features

12.2.1 Intelligence Elevator Control

The core function of this product is to help robots and other intelligent devices to control the elevator, such as calling the elevator, going to the designated floor, and controlling the elevator to open and close the door. This function greatly improves the business scenario of robots and breaks the previous limitation that robots can only work on the same floor.

12.2.2 Intelligence Status Detection

Through the built-in sensor and adaptive algorithm, this product can accurately detect the current floor, up and down status of the elevator, real-time to the millisecond level, with an accuracy of more than 96%, providing a very critical foundation so that the robot can enter and exit the elevator correctly and complete the work.

Copyright 2016-2021 Shanghai Slamtec Co., Ltd.

12.2.3 Elevator Diversity Adaption

The main control box has developed a variety of optimized filtering algorithms, so that this product is suitable for many different types of elevators, such as single-door elevators, double-door elevators, front and rear door elevators, etc. As it covers as many scenes as possible, this product can be used in most elevators at present. Users only need to simply calibrate and adjust through the APP provided after installing the equipment.

12.2.4 Multi-Level Network Adaption

Considering the limitations of the elevator network, how to ensure data interconnection and program interoperability is a very critical factor, and relatively it is also a difficult point. After continuous optimization iterations, we finally found a way to solve this problem. This product provides 4G, WIFI, BLE and other multi-level network communication methods to interact with robots and other smart devices to ensure the reliability of the communication link.

12.2.5 OTA Remote Upgrade

Support OTA remote upgrade of software and firmware, and batch deployment. At the same time, it provides support for VPN, which can remotely log in to the Linux system of this product for upgrades and other operations. Through the OTA function, real-time updates, upgrades and optimization can be done.

12.2.6 Interface Support

The intelligent elevator control provides a consistent API interface to the outside world, supports Bluetooth, MQTT, and HTTP communication protocols. Customers can control and interact with the elevator by writing their own program code. At the same time, it supports secondary development to meet the different customization needs of customers.

12.2.7 Swipe To Bypass

For some elevators that require a swipe card to ride, this product can also be easily supported. Just install the equipment we specify when installing the device, and then turn on the swipe card to bypass it in the APP. In this way, even if there is a card reader, it can be easily bypassed and freely enter and exit the elevator.

12.2.8 Unified Management

The cloud platform provided by SLAMTEC can perform real-time monitoring of the status of all deployed products, batch upgrades, and further data mining through online management, information statistics, equipment monitoring, etc., to provide exclusive accurate data models for hotels or commercial buildings, to guide them to improve their overall operational capabilities and service quality.

To know more about the detailed solution of elevator control, obtain it from the marketing department. Elevator control user manual->>

Note: This intelligent elevator control can only be used in China.For foreign customers, it needs R & D evaluation and customization.

Copyright 2016-2021 Shanghai Slamtec Co., Ltd.

13. Special Note

13.1 Charge point deployment

Precautions for the selection of charging station location:

(1) The charging station should be placed on the wall with a space of more than 0.35 meters on both sides and more than 1 meter in front;

(2) The charging station shall be close to the wall, and shall not be placed in the mirror wall, back hollowed out and other areas, etc;

(3) The position of the charging station must not be placed on soft ground such as carpet, otherwise it will cause height difference and cannot be charged;

(4) The position of the charging station in the scene needs to be marked to prevent incorrect recovery after moving.

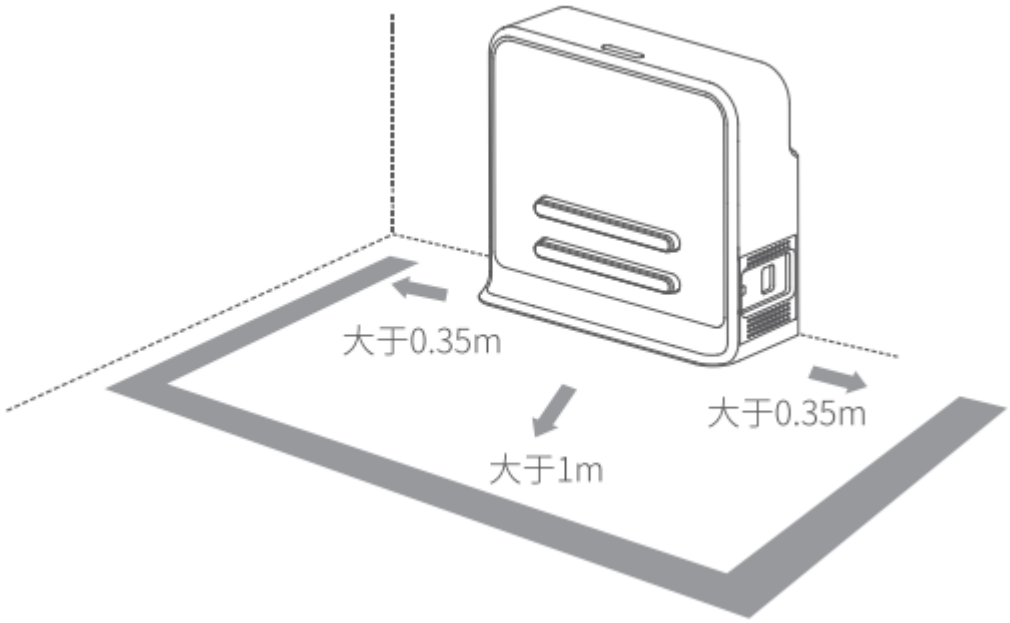

13.2 Restricted usage scenarios

Please avoid using Hermes chassis in the following scenarios to avoid chassis failure or damage.

(1) Overrun/heavy transportation

Do not put in items that exceed the maximum weighing parameter value to avoid affecting the normal use of Hermes. Please refer to the information in the product parameter table for the maximum load-bearing parameter value.

(2) Sill height

Copyright 2016-2021 Shanghai Slamtec Co., Ltd.

Please ensure that there are no obstacles more than 20mm in front of Hermes, and the maximum height of Hermes over the sill is 20mm. During Hermes driving, please try to avoid passing through uneven ground or other environments with large height.

(3) Man -made impact

Do not forcefully push or hit the Hermes body when Hermes is in normal use.

(4) Temperature / humidity

Do not place Hermes in places with high temperature, high humidity or water stains.

(5) Ground obstacles

Please ensure that the ground is clean and free of wireless obstacles and sundries.

(6) Outdoor

Do not use the machine outdoors.

(7) It is limited to safe use below 2000m above sea level.

13.3 Faults that cannot be handled temporarily

When the machine encounters a fault that cannot be handled temporarily, you can try the following operations:

(1)Please press the brake button；

(2) Push the machine back to the charging station;

(3) The machine can be forced to switch on and off in any state after power- on.

*Use only in emergency situations.

13.4 Notes

Notes for storage：

(1) Since the machine contains battery, it should be stored in a cool and dry environment;

(2)For long-term storage (more than 3 months), it is recommended to put it in a dry environment with room temperature of 10-25 ℃ and no corrosive gas;

(3) Hermes shall be charged every 6 months during long-term storage to ensure that the voltage of each battery unit is in the range of 3.6v-3.9v.

Packing notes:

(1)The packaging material must have a certain degree of strength and toughness, and can withstand slight vibration, extrusion, friction and collision during transportation;

(2)There should be padding around the package, which can play a good cushioning role;

Notes for transportation, loading and unloading:

Copyright 2016-2021 Shanghai Slamtec Co., Ltd.

(1)Please handle with care to prevent falling, collision, dragging and inversion；

(2)Stacking needs to be built firmly, compactly, stably and neatly；

Other notes:

(1)Do not treat Hermes violently (such as kicking, pushing, pulling);

(2)Do not spill liquid on the machine;

(3)Do not use the automatic recharge function on the soft carpet with a subsidence of more than 2cm;

(4)It is recommended to start the equipment on the charging base;

(5)Do not change the inside of the machine without authorization;

(6)In environments with many high-transmittance materials, please use auxiliary protection functions, such as virtual walls.

Copyright 2016-2021 Shanghai Slamtec Co., Ltd.

14. Maintenance

1.General maintenance

(1) Lidar cleaning: When the machine is shut down and not working, check the surroundings of the lidar to ensure that there are no obstructions.

(2) Universal wheel cleaning: When the machine is shut down and not working, gently lift the chassis, wipe the universal wheel with a soft dry cloth, and remove the surrounding foreign matters.

(3) Depth camera lens cleaning: Please wipe the lenses of the two depth cameras with a soft dry cloth when the machine is powered off.

(4) Cleaning the charging station: Please wipe the charging station and charging electrode with a soft dry cloth when the power is off.

(5) Collision bar cleaning: Please wipe the collision bar with a soft dry cloth when the power is off, and ensure that there are no wires, paper scraps and other foreign objects stuck on the anti-collision bar.

2. Maintenance cycle

For the maintenance of the main engine, it mainly includes depth camera lens inspection, collision bar inspection, clearance inspection around the lidar, foreign matter inspection around the driving wheel and universal wheel, charging station inspection, etc. The time interval of the maintenance cycle can be appropriately adjusted according to the environment, frequency, intensity and temperature of the machine.

Hermes maintenance schedule			Time interval		
NO	Name	Maintenance level	Year	Month	Week
1	Depth camera lens	Clean	--	--	1 time
2	Collision bar	Clean	--	--	1 time
3	Around the lidar	clearance	--	1 time	--
4	Universal wheel	Clean	--	--	1 time
5	Driving wheel	Clean	--	--	1 time
6	Charging station	Clean	--	1 time	--
7	Machine body	Overhaul	1 time	--	--

14-1 Hermes maintenance schedule

Copyright 2016-2021 Shanghai Slamtec Co., Ltd.

15. Common faults and troubleshooting

When an abnormality occurs during Hermes operation, please refer to the following table or page tips to solve the problem:

NO	Fault prompt	Solutions
1	Collision bar abnormal	Please check whether the collision bar is jammed, and tap the anti-collision bar several times to return the anti-collision bar to its position.
2	Hermes battery low	Please press the brake release button and push the machine back to the charging point to charge.
3	The charging point cannot be charged	Please check whether the power cord plug of the charging point is inserted into the socket and whether the indicator light of the charging point is on normally.
4	Unable to power on	Please check whether the charging point is connected to the power supply. After the charging point and Hermes are connected normally, if it cannot be solved, please contact the after-sales service department.
5	Hermes cannot be charged on the pile	Please try again on the charging station. If you cannot solve it, please contact after-sales service.
6	Unable to go back to the charging point	1. Please confirm whether the position of the charging point has been moved. If the position has been moved, please contact the after-sales department. 2. Please confirm whether there is a slope at the position of the charging point. If there is a slope, please contact the after-sales department. 3. Please push Hermes back to the charging point and try to restart Hermes.
7	Unable to get in / out of the elevator	1. Please confirm whether there are obstacles in the elevator. 2. Please confirm the internet signal near the elevator. 3. Please push Hermes back to the charging point and try to restart Hermes.
8	Universal wheels rotate intermittently	Please check whether there are any foreign objects such as threads, cards, etc. around the universal wheels and the driving wheels. If there are foreign objects, please clean them.
9	Machine can't walk	Please check whether the drive cable is connected normally. If it cannot be solved, please contact the after-sales service.
10	The light strip does not light up	Please check whether the connecting wire of the light strip is connected normally. If it cannot be solved, please contact the after-sales service.

Copyright 2016-2021 Shanghai Slamtec Co., Ltd.

16. Product Executive Standards and certificates

16.1 Product executive standards

GB 4943.1

GB/T 15706

GB/T 16855.1

GB/T 37283

GB/T 37284

*Please do not use this product beyond the limits of the manual to avoid or cause damage to Hermes.

*Please refer to the real object. We reserve the right to update the product without notice.

*Product manual version v1.0.

16.2 Certificate

Company name: Shanghai Slamtec Co., Ltd

Company Address: Unit 01, 2nd Floor, Building E, Shengyin Building, No.666 Shengxia Road, China (Shanghai) Pilot Free Trade Zone.

Contact information: (+86) 021 68581569

Copyright 2016-2021 Shanghai Slamtec Co., Ltd.