SLAMTEC
思 | 岚 | 科 | 技

LPX-E3P

Industrial 2D Lidar Field Monitor

Instruction Manual

Model:LPX-E3P1

0.225°@20Hz for 64 zones

SLAMTEC Inc.

September, 2025 Version 0.1.2

www.slamtec.com

Contents

1 Features **3**

2 Introduction **3**
2.1 System Composition 4
2.2 Mechanism 5
2.3 Output Data 6
2.4 Application Fields 6

3 Safety and Scope **8**

4 Detailed technical data **9**

5 Dimensional drawing **12**

6 Working range diagram **13**

7 PIN assignment **14**

8 Identify work status **15**

9 Mounting Sensor **16**

10 Connecting Sensor **18**
10.1 Power connection 18
10.2 Input signal connection 18
10.3 Output signal connection 20
10.4 Connect configuration cables 21

11 Document History **22**

List of Tables

4.1 LPX-E3P1 detailed technical data chart 11
7.1 PIN assignment chart 14
8.1 Indicator light status vs working status 15
10.1 Input signal Field Sets selection table 20

List of Figures

2.1 LPX-E3P System Composition 4
2.2 LPX-E3P Working Schematic 5
2.3 The Environment Map Obtained from LPX-E3P Scanning[1] 6
5.1 Dimensional drawing 12
6.1 Working range diagram 13
7.1 SH1.0 14-pin male connector 14
8.1 Indicator LEDs 15
9.1 Reserve front space requirements 16

9.2 Reserve rear space requirements 16
9.3 Install multiple sensor on the same plane 17
9.4 Installation angle requirements 17
10.1 Connect PNP input[2] 18
10.2 Connect PNP output[3] 21
10.3 Connect configuration cables 21

List of Listings

LPX-E3P1

1 Features

- 20 Hz Scanning Frequency
- $0.225°$ Field Monitoring Resolution
- $360° \varnothing 25m$ Monitoring Range
- 64 Field Sets, 3 Fields in each set
- 80 k-lux light resistance, for indoor and outdoor

2 Introduction

LPX-E3P is the next generation 2D Lidar Field Monitor developed by SLAMTEC with 64 configurable Field Sets, and 3 Field monitored simultaneously in each Field Set. By using wireless energy and data transmission technology, it beats the lifetime and reliability of traditional lidar.

LPX-E3P, as a 2D Lidar Field Monitor, can perform 360-degree all-round laser ranging scanning in a 2D plane with a radius of 25 meters, and generate field monitoring statuts data in the plane it is located. These fields monitoring data can be used in practical applications such as robot obstacle avoidance, assembly line piece counting, and channel passage monitoring.

Comparing to other Field Monitors, the ranging performance of LPX-E3P is more stable when detecting distant objects, switching between black and white objects, and objects illuminated by strong light. It can achieve ideal field monitoring effects within a 25-meter ranging radius in indoor and outdoor environments, and its application scope can be expanded to more Industrial grade usage scenarios.

The scanning frequency of LPX-E3P is 20Hz (1200rpm). At the scanning frequency of 20Hz, an field monitoring angular resolution of 0.225°can be configured. The lidar internally performs high-frequency scanning at a frequency much higher than that required for monitoring resolution, and uses full-angle high-frequency scanning. Multi-sampling technology ensures object recognition accuracy at every monitoring angle.

Benefited from the improved performance of SLAMTEC hardware and the optimization of the algorithm, LPX-E3P performs great in various indoor environments and outdoor environments exposed to strong direct sunlight. At the same time, each LPX-E3P has undergone strict testing before leaving the factory to ensure that the laser power emitted meets the IEC-60825 Class 1 human eye safety level.

2.1 System Composition

LPX-E3P consists of a range scanner core and the mechanical powering part, which makes the core rotate at a high speed. When it functions normally, the scanner core will rotate and scan clockwise. Users can configure fields to be monitored in SLAMTEC LPX SCAN DESIGNER software, then sensor will scan and monitor the these fields.

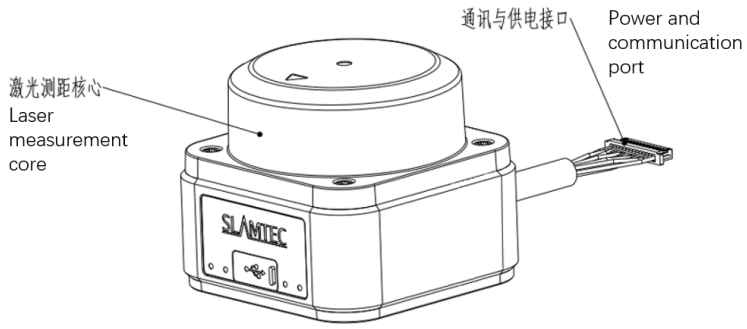

Figure 2.1: LPX-E3P System Composition

LPX-E3P comes with a rotation speed detection and adaptive system. The system automatically adjusts angular resolution according to rotating speed. And there is no need to provide a complicated power system for LPX-E3P. In this way, the simple power supply schema saves the BOM cost.

Detailed specification of power and communication interface can be found in following sections.

2.2 Mechanism

LPX-E3P is based on the laser flight-of-time (TOF) ranging principle and adopts high-speed laser acquisition and processing hardware developed by SLAMTEC. The system ranges more than 32000 times per second. During every ranging process, LPX-E3P emits modulated infrared laser signal, which is then reflected by the object to be detected. The returning signal is then sampled by the laser acquisition system in LPX-E3P, and processor embedded in LPX-E3P starts processing the sample data and use internal Field Monitor App to detect the status for all selected fields in real-time.

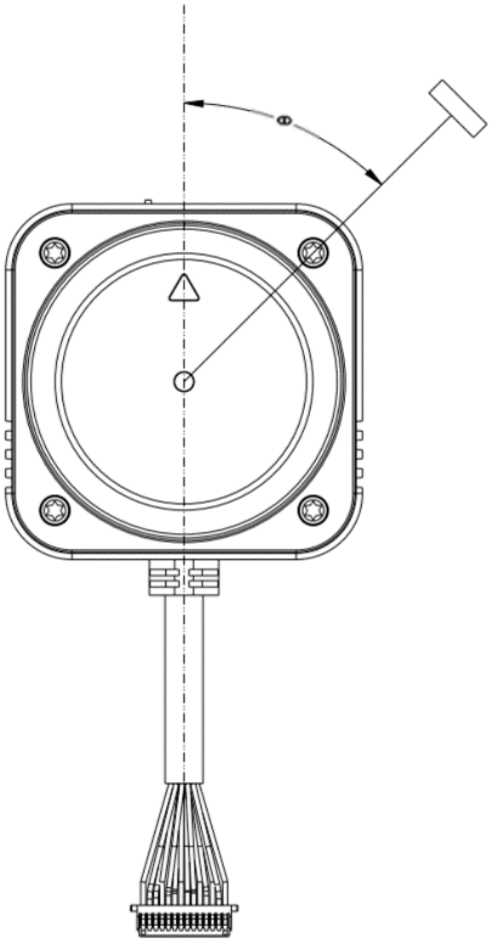

Figure 2.2: LPX-E3P Working Schematic

When driven by motor system, range scanner core will rotate clockwise and perform 360-degree scan for current environment.

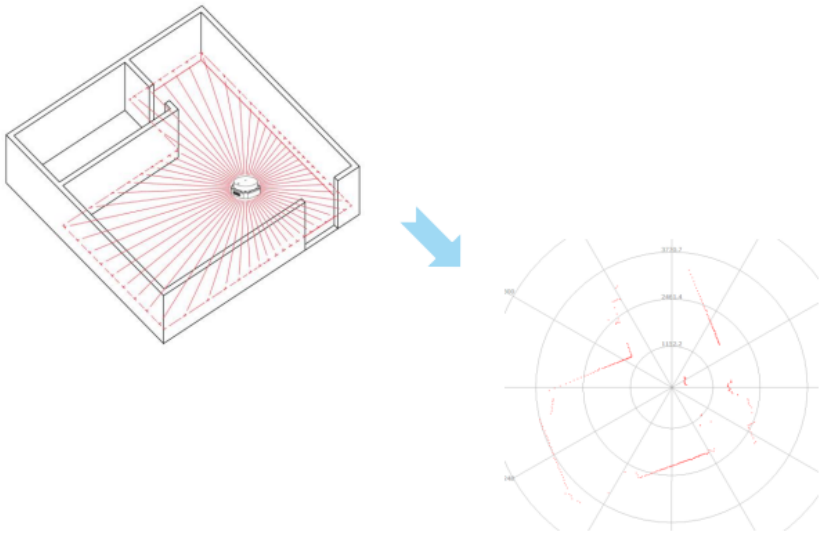

Figure 2.3: The Environment Map Obtained from LPX-E3P Scanning[4]

2.3 Output Data

This sensor does not provide raw data(distant and angule) output when working. After data collection, it will detect whether there are objects in the set area through the sensor's built-in field monitoring application. If an object appears, the switch signal will be output through the corresponding output interface.

Through 6 input interfaces, 64 field sets can be selected, and 3 fields monitored at the same time can be switched. All zone groups need to be configured in SLAMTEC LPX SCAN DESIGNER software.

In addition to the 3 output channels corresponding to the three fields monitored simultaneously, the sensor also provides a sensor working status output channel through which the working status of the sensor can be monitored.

2.4 Application Fields

This sensor is suitable for the following fields:

- AGV, AMR Avoidance
- Robot, UAV Avoidance
- Assembly line piece counting

[4]Note: The LIDAR scan image is not directly relative to environment shown here. Illustrative purposes only.

- Area intrusion monitoring
- Channel passage monitoring

This sensor is NOT suitable for the following fields:

- Any fields a safety field scanner is required

3 Safety and Scope

LPX-E3P system uses a low-power infrared laser as its light source and drives it by using modulated pulse. The laser emits light in a very short time frame which can ensure the safety of humans and pets,and it reaches the Class I laser safety standard. Complies with 21 CFR 1040.10 and 1040.11 except for deviations pursuant to Laser Notice No. 50, dated June 24, 2007.

Caution: Use of controls or adjustments or performance of procedures other than those specified herein may result in hazardous radiation exposure.

The modulated laser can effectively avoid interference from ambient light and sunlight during the ranging and scanning process, which makes the LPX-E3P work excellently in all kinds of indoor environments and outdoor environments without direct sunlight.

This sensor is not a safety field scanner, do not use this sensor in unsuitable occasion. Please follow this document and use this sensor in applicable scenarios to avoid personal safety and property damage.

Do not remove the sensor housing screws without authorization.

Please read this document completely before using this sensor.

4 Detailed technical data

Object	Value
Features	
Measurement principle	SL-dTOF
Application	Indoor and Outdoor($\geq$ 80Klux)
Light source	Infrared Laser(905nm)
Laser class	1 (IEC 60825-1:2014, EN 60825-1:2014)
Horizontal aperture angle	360°
Scanning frequency	20Hz
Angular resolution	0.225°
Working range	
-Recognition($\geq$70%remission)	0.05m .. 25m
-Warning($\geq$10%remission)	0.05m .. 10m
-Alarming($\geq$2%remission)	0.05m .. 4m
Mechanics/electronics	
Connection type	1x SH1.0 14-pin male(0.8m)
Supply voltage	9 V DC .. 30 V DC
Power consumption	Typ. 3 W
IO Output Power	$\leq 1.2W$
Housing color	SLAMTEC BLUE
Enclosure rating	IP65 (IEC 60529:1989+AMD1:1999+AMD2:2013)
Protection class	III (IEC 61140:2016-1)
Weight	180 g. without connecting cables
Dimensions (L x W x H)	56.63 x 56.63 x 48.00 mm
$MTBF$	>10 years
Safety-related parameters	
$MTTF_D$	>10 years

Performance

Response time	1 scan, typ. 50 ms 2 scans, $\leq$ 100 ms
Detectable object shape	Almost any
Systematic error	$\pm$30mm
Integrated application	Field Monitoring with flexible fields
Number of field sets	64 Field Sets (3 Fields in each Field Set)
Simultaneous evaluation cases	1 (3 fields)

Interfaces

Confuring interface	USB Type-c
Digital inputs	6
Digital outputs	3(PNP)
Working Status Output	1(PNP)
Delay time	50 ms .. 30,000 ms, configurable
Dwell time	50 ms .. 60,000 ms, configurable
Optical indicators	3x Monocolor LED(Fields Status) 1x Multicolor LED(Sensor Status)

Ambient data

Object remission	2% ... 1,000% (reflectors)
Electromagnetic compatibility (EMC)	
-Emitted radiation	Residential area(EN 61000-6-3:2007+AMD:A1:2011)
-Electromagnetic immunity	Industrial environment(EN 61000-6-2:2005)
Vibration resistance	
-Sine resonance scan	10 Hz ... 1,000 Hz [5]
-Sine test	10 Hz ... 500 Hz, 5 g, 10 frequency cycles [5]
-Noise test	10 Hz ... 250 Hz, 4.24 g RMS, 5 h [6]
Shock resistance	50 g, 11 ms, $\pm$ 3 single shocks/axis [7] 25 g, 6 ms, $\pm$ 1,000 continuous single shocks/axis [7] 50 g, 3 ms, $\pm$ 5,000 continuous single shocks/axis [7]
Ambient operating temperature	-10 °C ... +50 °C[8]
Storage temperature	-30 °C ... +70 °C[8]

[5] IEC 60068-2-6:2007.
[6] IEC 60068-2-64:2008.
[7] IEC 60068-2-27:2008.
[8] IEC 60068-2-14:2009.

Switch-on temperature	0 °C ... +50 °C
Temperature change	-10 °C ... +50 °C, 10 cycles[9]
Damp heat	+25 °C ... +55 °C, 95 % RH, 6 cycles[10]
Permissible relative humidity	
-Operation	≤80 %, Non-condensing (EN 60068-2-30:2005)
-Storage	≤90 %, Non-condensing (EN 60068-2-30:2005)
Ambient light immunity	80,000 lx

General notes

Note on use	The sensor does not constitute a safety component as defined by relevant legislation on machine safety

Table 4.1: LPX-E3P1 detailed technical data chart

[9] EN 60068-2-14:2009.
[10] EN 60068-2-14:2009.

5 Dimensional drawing

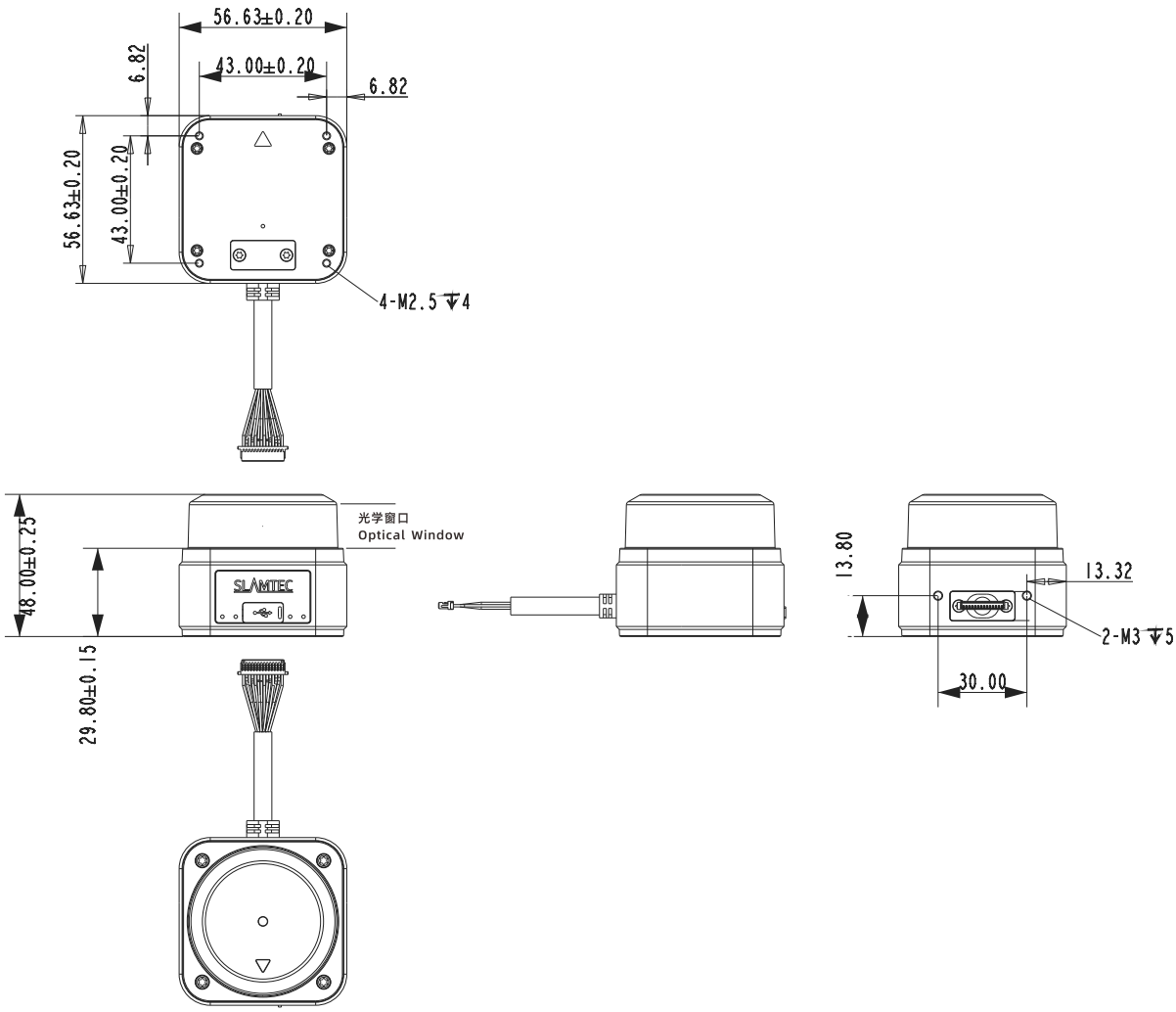

Figure 5.1: Dimensional drawing

6 Working range diagram

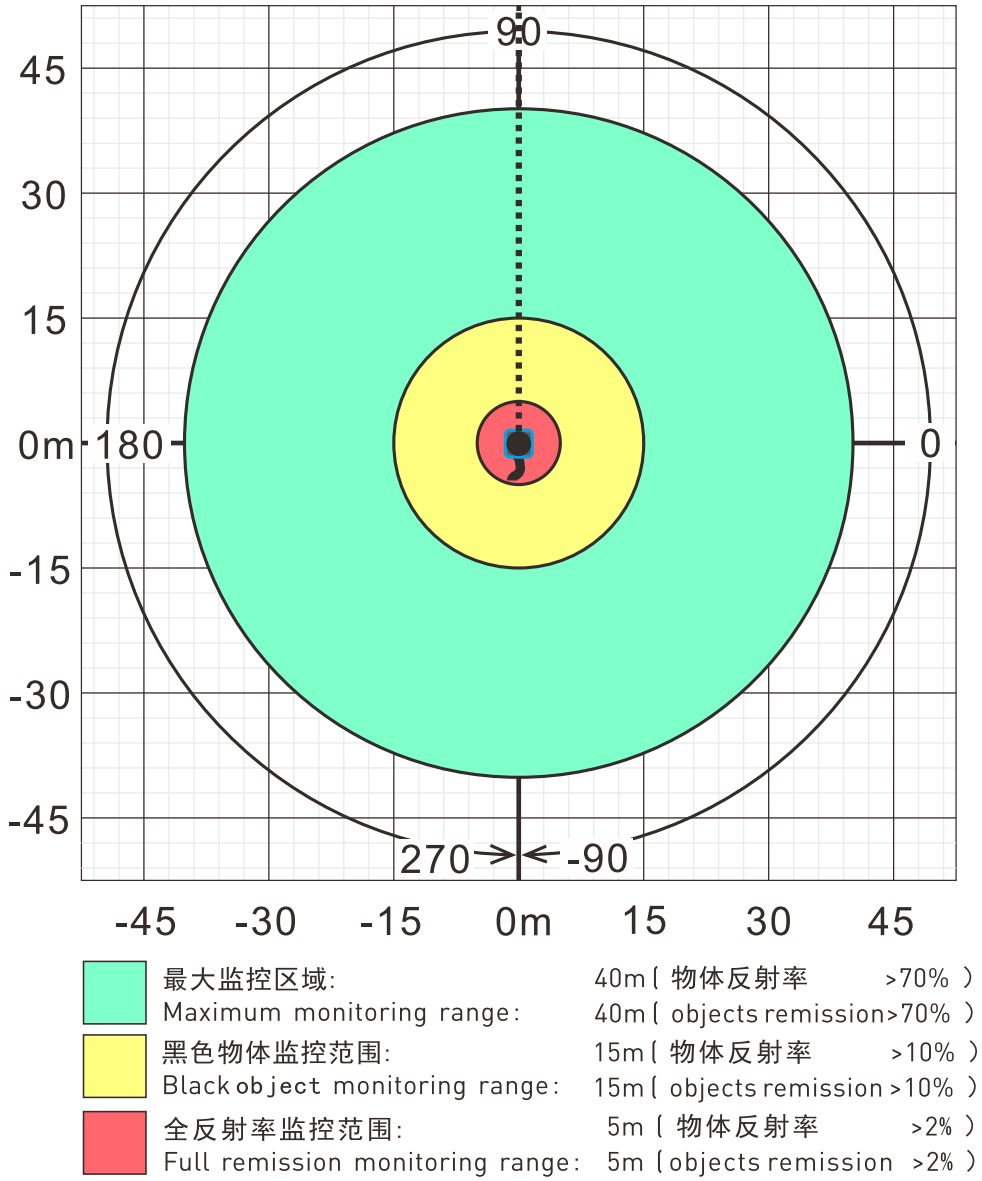

Figure 6.1: Working range diagram

7 PIN assignment

With protrusions

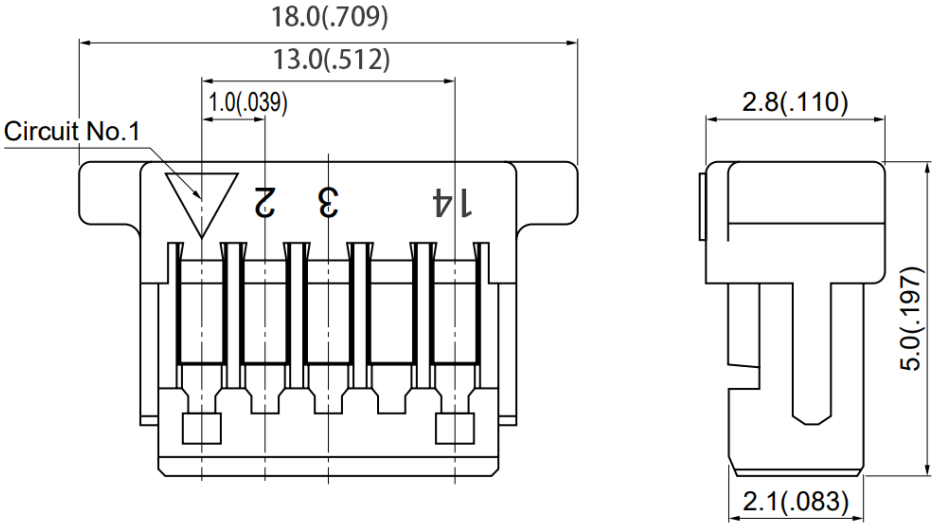

Figure 7.1: SH1.0 14-pin male connector

Number	Cable Color	Signal Type	Signal	Function Description
1	RED	Power	VCC	Power Positive 9-30V
2	YELLOW	Power	GND	Power Negative
3	WHITE	COM	IN COM	Input COM
4	PINK	INPUT	IN1	Input Port 1
5	ORANGE	INPUT	IN2	Input Port 2
6	VIOLET	INPUT	IN3	Input Port 3
7	MINT	INPUT	IN4	Input Port 4
8	BABY BLUE	INPUT	IN5	Input Port 5
9	BROWN	INPUT	IN6	Input Port 6
10	BLACK	COM	OUT COM	Output COM
11	PURPLE	OUTPUT	OUT1	Port action if Field 1 detect an object
12	GREY	OUTPUT	OUT2	Port action if Field 2 detect an object
13	BLUE	OUTPUT	OUT3	Port action if Field 3 detect an object
14	GREEN	STATUS	OUT	Port action if sensor fails

Table 7.1: PIN assignment chart

8 Identify work status

The current working status of the sensor can be identified by observing the four indicator lights in front of the sensor.

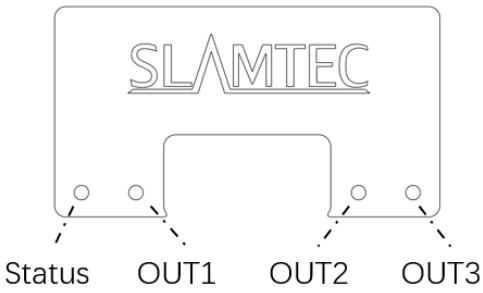

Figure 8.1: Indicator LEDs

The specific indicator light status corresponds to the working status as shown in the table below.

Indicator 1 STATUS	Indicator 2 OUT1	Indicator 3 OUT2	Indicator 4 OUT3	working status
Red	ON	ON	ON	Startup, parameter setting, firmware upgrade, rectifiable faults
Red Flashing	Flashing	Flashing	Flashing	Fatal failure
-	-	-	-	Shudown
Green	-	-	-	Working
Green Flashing	-	-	-	Demo Mode
Green	ON	-	-	Object detected in Field 1 (OUT1)
Green	-	ON	-	Object detected in Field 2 (OUT2)
Green	-	-	ON	Object detected in Field 3 (OUT3)
Yellow	-	-	-	Alignment mode
Yellow Flashing	-	-	-	Identificating device

Table 8.1: Indicator light status vs working status

9 Mounting Sensor

The sensor comes with its own cable, and the cable outlet needs to be reserved to avoid excessive bending of the cable. There should be a USB Type-C jack and indicator light in front of the laser scanning sensor base to facilitate connection debugging and observation of the sensor status.

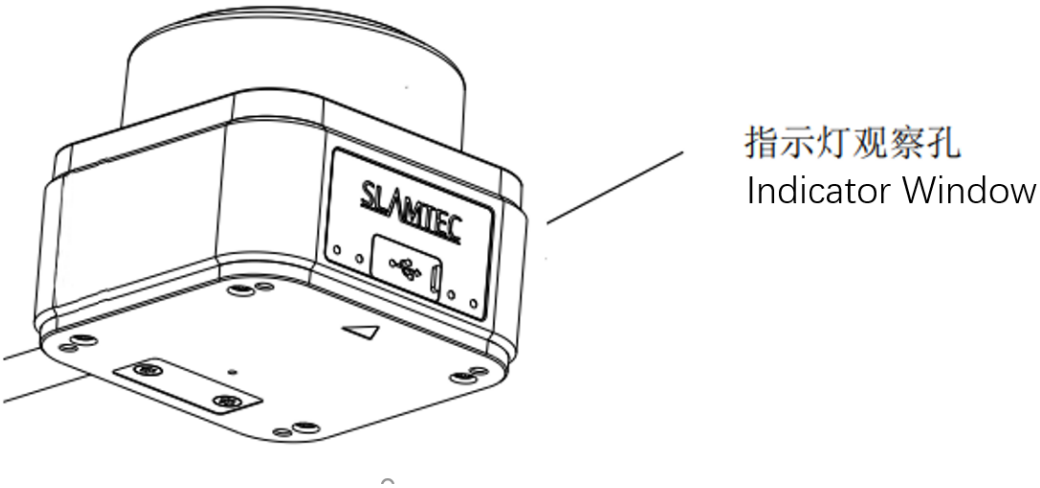

Figure 9.1: Reserve front space requirements

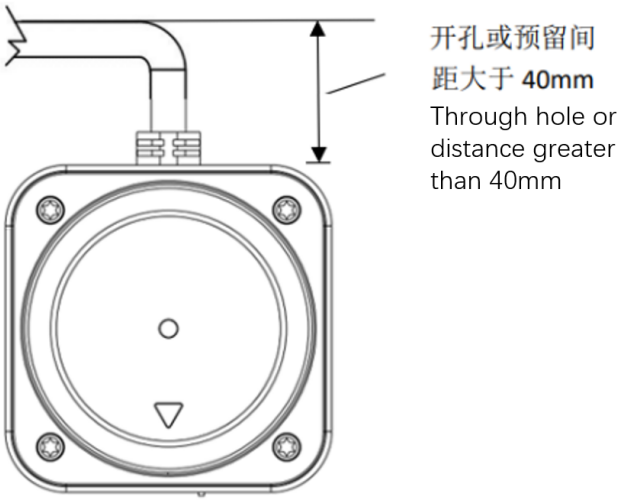

Figure 9.2: Reserve rear space requirements

This sensor uses SL-dTOF ranging technology. When there are multiple sensors working together on the same plane, in order to avoid mutual interference, it is recommended that the inclination angle be more than 3°.

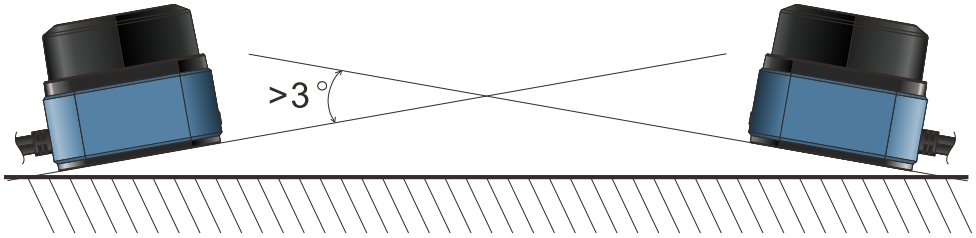

Figure 9.3: Install multiple sensor on the same plane

Due to the cone-shaped divergent emission of the sensor light spot, it is recommended that the laser scanning sensor be installed at a height of ≤200mm from the ground. If the installation height is <200mm from the ground, please tilt the laser scanning sensor upward 1-3°.

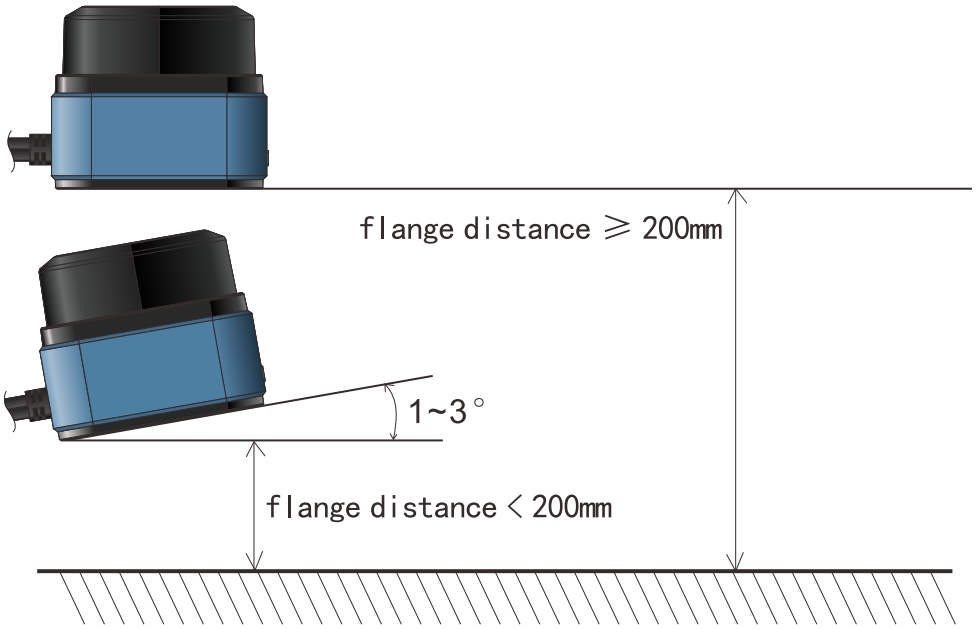

Figure 9.4: Installation angle requirements

10 Connecting Sensor

10.1 Power connection

Refer to the pin definition table for power pins. This sensor supports a wide range of 9..30VDC voltage input, and the typical voltage is 24VDC. Input voltage exceeding the rated range or reverse power supply or AC power supply will cause irreversible damage to the sensor.

10.2 Input signal connection

The input is an open-collector (PNP) signal, which uses an optocoupler to isolate the input and is triggered by a high level. The input high level typical value is 24V, the range is DC11-28V, and the input low level should be less than 0.5V.

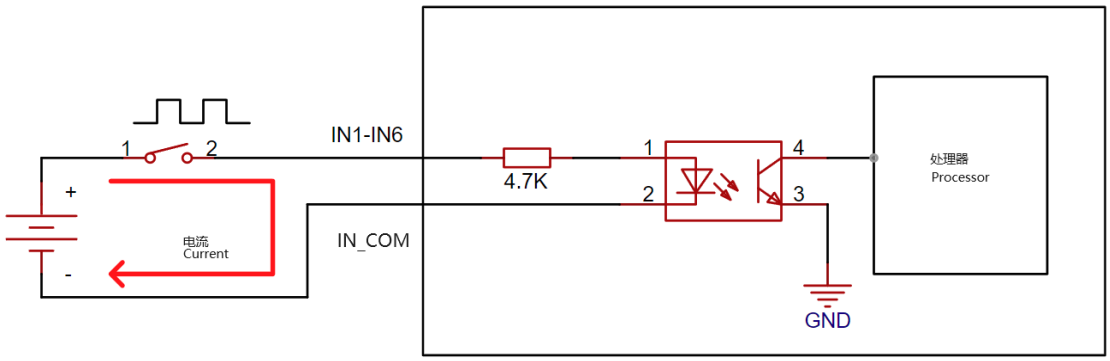

Figure 10.1: Connect PNP input[11]

The sensor provides 64 channels and switches to the specified numbered channel through a combination of 6 IO port input signals. The detection range of the channel needs to be set in advance through the configuration software. External devices perform zone selection and switching through input signals. When performing a switch, if the zone group switched to is not configured, the zone group before the switch will be maintained. After receiving the switching command, the radar will switch channels after completing the current scan cycle, that is, switching channels 50ms after the input signal changes. The specific input signal and area group number meet the binary encoding, and the detailed correspondence is shown in the table below.

[11]The typical connections given here are only for wiring reference and may not be suitable for all situations. Users are asked to design according to actual applications.

Channel ID	IN6	IN5	IN4	IN3	IN2	IN1
0	HIGH	HIGH	HIGH	HIGH	HIGH	HIGH
1	HIGH	HIGH	HIGH	HIGH	HIGH	LOW
2	HIGH	HIGH	HIGH	HIGH	LOW	HIGH
3	HIGH	HIGH	HIGH	HIGH	LOW	LOW
4	HIGH	HIGH	HIGH	LOW	HIGH	HIGH
5	HIGH	HIGH	HIGH	LOW	HIGH	LOW
6	HIGH	HIGH	HIGH	LOW	LOW	HIGH
7	HIGH	HIGH	HIGH	LOW	LOW	LOW
8	HIGH	HIGH	LOW	HIGH	HIGH	HIGH
9	HIGH	HIGH	LOW	HIGH	HIGH	LOW
10	HIGH	HIGH	LOW	HIGH	LOW	HIGH
11	HIGH	HIGH	LOW	HIGH	LOW	LOW
12	HIGH	HIGH	LOW	LOW	HIGH	HIGH
13	HIGH	HIGH	LOW	LOW	HIGH	LOW
14	HIGH	HIGH	LOW	LOW	LOW	HIGH
15	HIGH	HIGH	LOW	LOW	LOW	LOW
16	HIGH	LOW	HIGH	HIGH	HIGH	HIGH
17	HIGH	LOW	HIGH	HIGH	HIGH	LOW
18	HIGH	LOW	HIGH	HIGH	LOW	HIGH
19	HIGH	LOW	HIGH	HIGH	LOW	LOW
20	HIGH	LOW	HIGH	LOW	HIGH	HIGH
21	HIGH	LOW	HIGH	LOW	HIGH	LOW
22	HIGH	LOW	HIGH	LOW	LOW	HIGH
23	HIGH	LOW	HIGH	LOW	LOW	LOW
24	HIGH	LOW	LOW	HIGH	HIGH	HIGH
25	HIGH	LOW	LOW	HIGH	HIGH	LOW
26	HIGH	LOW	LOW	HIGH	LOW	HIGH
27	HIGH	LOW	LOW	HIGH	LOW	LOW
28	HIGH	LOW	LOW	LOW	HIGH	HIGH
29	HIGH	LOW	LOW	LOW	HIGH	LOW
30	HIGH	LOW	LOW	LOW	LOW	HIGH
31	HIGH	LOW	LOW	LOW	LOW	LOW
32	LOW	HIGH	HIGH	HIGH	HIGH	HIGH
33	LOW	HIGH	HIGH	HIGH	HIGH	LOW
34	LOW	HIGH	HIGH	HIGH	LOW	HIGH
35	LOW	HIGH	HIGH	HIGH	LOW	LOW

36	LOW	HIGH	HIGH	LOW	HIGH	HIGH
37	LOW	HIGH	HIGH	LOW	HIGH	LOW
38	LOW	HIGH	HIGH	LOW	LOW	HIGH
39	LOW	HIGH	HIGH	LOW	LOW	LOW
40	LOW	HIGH	LOW	HIGH	HIGH	HIGH
41	LOW	HIGH	LOW	HIGH	HIGH	LOW
42	LOW	HIGH	LOW	HIGH	LOW	HIGH
43	LOW	HIGH	LOW	HIGH	LOW	LOW
44	LOW	HIGH	LOW	LOW	HIGH	HIGH
45	LOW	HIGH	LOW	LOW	HIGH	LOW
46	LOW	HIGH	LOW	LOW	LOW	HIGH
47	LOW	HIGH	LOW	LOW	LOW	LOW
48	LOW	LOW	HIGH	HIGH	HIGH	HIGH
49	LOW	LOW	HIGH	HIGH	HIGH	LOW
50	LOW	LOW	HIGH	HIGH	LOW	HIGH
51	LOW	LOW	HIGH	HIGH	LOW	LOW
52	LOW	LOW	HIGH	LOW	HIGH	HIGH
53	LOW	LOW	HIGH	LOW	HIGH	LOW
54	LOW	LOW	HIGH	LOW	LOW	HIGH
55	LOW	LOW	HIGH	LOW	LOW	LOW
56	LOW	LOW	LOW	HIGH	HIGH	HIGH
57	LOW	LOW	LOW	HIGH	HIGH	LOW
58	LOW	LOW	LOW	HIGH	LOW	HIGH
59	LOW	LOW	LOW	HIGH	LOW	LOW
60	LOW	LOW	LOW	LOW	HIGH	HIGH
61	LOW	LOW	LOW	LOW	HIGH	LOW
62	LOW	LOW	LOW	LOW	LOW	HIGH
63	LOW	LOW	LOW	LOW	LOW	LOW

Table 10.1: Input signal Field Sets selection table

10.3 Output signal connection

The output is a collector PNP normally open, using optocoupler isolation output. When there is no alarm output, PNP and OUT_{COM} remain disconnected; when there is a signal on the

output, the level is $OUT_{COM} - 1$ volt. The maximum load capacity of the output port is 1.2W. Please refer to the figure below for connection.

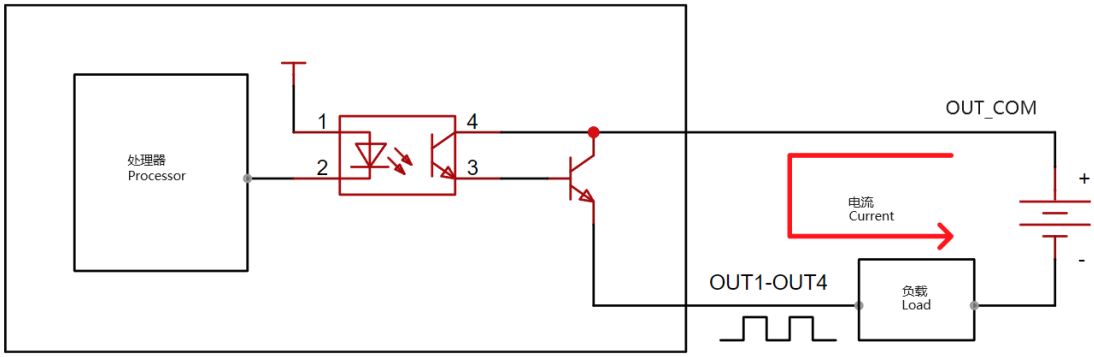

Figure 10.2: Connect PNP output[12]

The sensor output port corresponds to the fields drawn in the configuration software. If the corresponding area is not configured, the port will not output. When the radar is working normally, the OUT4 port will remain high and can be used to judge the radar working status.

10.4 Connect configuration cables

The sensor uses USB Type-C to connect to the computer for configuration. This interface is only used for data transmission and not for power supply. Therefore, before connecting to the computer, use the SH1.0 14-pin interface for power supply.

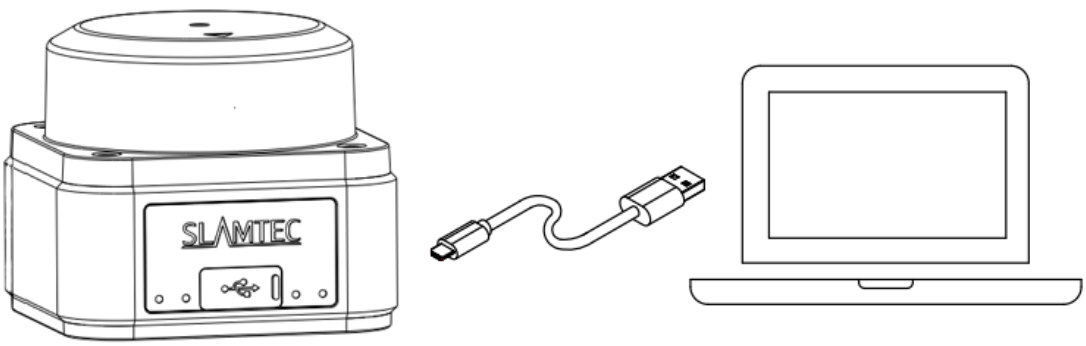

Figure 10.3: Connect configuration cables

Please refer to the configuration software instructions for specific parameter configuration.

[12]The typical connections given here are only for wiring reference and may not be suitable for all situations. Users are asked to design according to actual applications.

11 Document History

Date	Version	Description
2024-03-11	0.1.0	Initial version of document
2024-06-11	0.1.1	Correct some values
2024-07-15	0.1.2	Add Demo Mode

SHANGHAI SLAMTEC CO., LTD
Address: Room 601, 6th Floor, Kailong Technology Building, Building 3, No.6, Lane 3158, Longdong Avenue, Pudong New District, Shanghai, China
Made in China