WARNING

THE INSTALLATION SHALL BE MADE BY QUALIFIED INSTALLATION PERSONNEL AND SHOULD CONFORM TO ALL NATIONAL AND LOCAL CODES

Hyundai Robot

HDR20L-32250514MMEN1

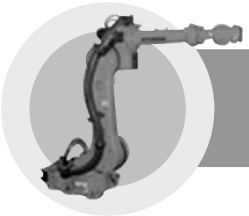

Manipulator Maintenance Manual

HDR20L-32

HD HYUNDAI ROBOTICS

The information presented in the manual is the property of HDHyundai Robotics.
Any copy or even partial is not allowed without prior written authorization
from HDHyundai Robotics.
It may not be provided to the third party, nor used for any other purposes.

Hyundai Robotics reserves the right to modify without prior notification.

Printed in Korea - May. 2025. 1th Edition
Copyright © 2025 by HDHyundai Robotics Co., Ltd.

Contents

1. Safety 1-1

1.1. Introduction 1-2
1.2. Relevant Safety Regulations 1-4
1.3. Safety Training 1-4
1.4. Safety Related Nameplate 1-5
1.4.1. Safety Marking 1-5
1.4.2. Safety Nameplate 1-5
1.5. Definition of Safety Functions 1-6
1.6. Installation 1-7
1.6.1. Safety Fence 1-7
1.6.2. Placement of Robot & Peripheral Equipment 1-9
1.6.3. Installing the Robot 1-13
1.6.4. Space for Robot Installation 1-16
1.7. Safety Operation for Robot Handling 1-17
1.7.1. Safety Precautions for Robot Handling ..... **오류! 책갈피가 정의되어 있지 않습니다.**
1.7.2. Safety Precautions for Operating Test 1-21
1.7.3. Safety Precautions for Automatic Operation ..... **오류! 책갈피가 정의되어 있지 않습니다.**
1.8. Safety Precautions for Access to Safety Fence ..... 오류! 책갈피가 정의되어 있지 않습니다.
1.9. Safety Precautions for Maintenance and Repair ..... 오류! 책갈피가 정의되어 있지 않습니다.
1.9.1. Safety Precautions for Controller Maintenance and Repair **오류! 책갈피가 정의되어 있지 않습니다.**
1.9.2. Safety Precautions for Robot System & Manipulator Maintenance **오류! 책갈피가 정의되어 있지 않습니다.**
1.9.3. Necessary Actions after Maintenance and Repair .. **오류! 책갈피가 정의되어 있지 않습니다.**
1.10. Safety Functions ..... 오류! 책갈피가 정의되어 있지 않습니다.
1.10.1. Operating a Safety Circuit ..... **오류! 책갈피가 정의되어 있지 않습니다.**
1.10.2. Emergency stop ..... **오류! 책갈피가 정의되어 있지 않습니다.**
1.10.3. Operating Speed ..... **오류! 책갈피가 정의되어 있지 않습니다.**
1.10.4. Connecting the Safety Devices ..... **오류! 책갈피가 정의되어 있지 않습니다.**
1.10.5. Restricting the working Envelope ..... **오류! 책갈피가 정의되어 있지 않습니다.**
1.10.6. Monitoring Function 1-31
1.11. Safety Related to End Effectors 1-32
1.11.1. Gripper 1-32
1.11.2. Tool / Workpiece 1-32
1.11.3. Pneumatic and Hydraulic Systems 1-32
1.12. Liabilities 1-33

2. Specifications 2-1

2.1. Robot Machinery Part ..... 오류! 책갈피가 정의되어 있지 않습니다.
2.2. Location of Robot Identification Plate 2-3

2.3. Basic Specifications 2-4
2.4. Robot Dimension and Working Envelope 2-5
2.5. Axis Identification 2-6
2.6. Details of Wrist Axis Attachment Surface 2-7
2.7. Details of ARM Frame Attachment Surface 2-8
2.8. Application Wiring and Inspection Wiring Diagram 2-9
2.9. Restricting the Working Envelope 2-11
2.9.1. Axis 1(Axis S) 2-11

3. Instructions 3-1

3.1. Robot Component Name 3-2
3.2. Location of Safety Nameplate 3-3
3.3. How to Transport 3-5
3.3.1. Using Crane 3-6
3.3.2. Forklift use 3-8
3.4. Storage of the robot 3-10
3.5. How to Install ..... 오류! 책갈피가 정의되어 있지 않습니다.
3.5.1. Operating Conditions ..... 오류! 책갈피가 정의되어 있지 않습니다.
3.5.2. Installation the Robot Manipulator ..... 오류! 책갈피가 정의되어 있지 않습니다.
3.5.3. Accuracy of Installation Surface 3-12
3.5.4. Dimension of Installation Surface 3-13
3.5.5. Robot Cable Connection 3-14
3.5.6. Emergency Stop Time & Distance 3-15
3.6. Allowable Load of Wrist Axis 3-16
3.6.1. Permitted load torque estimation 3-16
3.6.2. Permitted inertia moment estimation 3-18
3.6.3. Example of permitted torque and inertia moment calculation (HS180 Case) 3-19

4. Inspection 4-1

4.1. Inspection Item and Period 4-2
4.2. Inspection Item and Period 4-3
4.3. Inspection of Main External Bolts 4-5
4.4. Checking the timing belt 4-6

5. Maintenance 5-1

5.1. Grease Replacement 5-2
5.1.1. S-Axis Reduction Gear 5-44
5.1.2. H-Axis Reduction Gear 5-66
5.1.3. V-Axis Reduction Gear 5-88
5.1.4. R2-Axis Reduction Gear 5-1010
5.1.5. B/R1-Axis Reduction Gear 5-1012

5.2. Battery Replacement 5-134
5.2.1. Instructions for Battery Storage 5-156
5.3. Internal Wiring.....5-167

6. Troubleshooting 6-1

6.1. Troubleshooting Procedure 6-2
6.2. Trouble Symptoms and Possible Causes 6-3
6.3. Diagnostics and Resolutions for Major Parts Failure 6-5
6.3.1. Reduction Gear 6-5
6.3.2. Brake 6-7
6.3.3. Motor.....6-7
6.3.4. Encoder 6-8
6.4. Motor Replacement.....6-9
6.4.1. Necessary Tools and Parts.....6-10
6.4.2. How to Replace Motor.....6-11
6.5. Encoder Zero Setting 6-17
6.5.1. Zero Setting 6-18
6.5.2. Encoder Reset.....6-19
.....6-20

7. Recommended Spare Parts

7. Recommended Spare Parts 7-1

8. Decommissioning 8-5

8.1. Material for each robot part 8-6

9. Internal Wiring Diagram 9-1

List of Figures

Figure 1.1 Recommended size for safety net and entrance gate (slot type entrance gate) 1-7
Figure 1.2 Recommended size for safety net and entrance gate (square type entrance gate) 1-7
Figure 1.3 Arrangement of LCD robot peripheral devices and workers 1-11
Figure 1.4 Arrangement of general robot peripheral devices and workers 1-12
Figure 1.5 Configuration for safety chain ..... **오류! 책갈피가 정의되어 있지 않습니다.**
Figure 1.6 Connection with external emergency halt switch through system board terminal block TBEM ..... **오류! 책갈피가 정의되어 있지 않습니다.**
Figure 2.1 Robot Machinery Part ..... **오류! 책갈피가 정의되어 있지 않습니다.**
Figure 2.2 The location of identification plate 2-3
Figure 2.3 Robot Dimension and Working Envelope [HDR20L-32] 2-5
Figure 2.4 Robot Dimension and Axis [HDR20L-32] 2-6
Figure 2.5 Details of Wrist Axis Attachment Surface [HDR20L-32] 2-7
Figure 2.6 Details of Upper ARM FRAME Attachment Surface [HDR20L-32] 2-8
Figure 2.7 Application Wiring and Piping Diagram [HDR20L-32] 2-9
Figure 2.8 Details of Application Connector [HDR20L-32] 2-10
Figure 3.1 Name of Robot Components 3-2
Figure 3.2 Location of Safety Nameplate 3-4
Figure 3.3 How to Transport: Using crane [HDR20L-32] 3-7
Figure 3.4 How to Transport: Using forklift [HDR20L-32] 3-9
Figure 3.5 Accuracy of Installation surface 3-12
Figure 3.6 Dimension of Robot Installation [HDR20L-32] 3-13
Figure 3.7 Robot Cable Connection 3-14
Figure 3.8 Wrist Axis Torque Mapping [HDR20L-32] 3-17
Figure 3.9 2-D load model 3-19
Figure 3.10 3-D load model 2-D shape 3-21
Figure 3.11 3-D load model 3-D shape 3-23
Figure 4.1 Inspection Part for Main Bolts [HDR20L-32] 4-5
Figure 4.2 Location to check the tension of R2 axis timing belt [HDR20L-32] 4-6
Figure 4.3 Location to check the tension of B axis timing belt [HDR20L-32] 4-7
Figure 5.1 Location of Battery Replacement 5-14
Figure 6.1 Axis S motor assembly 6-13
Figure 6.2 Axis H motor assembly 6-14
Figure 6.3 Axis V motor assembly 6-14
Figure 6.4 Axis R2 motor assembly 6-15
Figure 6.5 Axis B motor assembly 6-15
Figure 6.6 Axis R1 motor assembly 6-16
Figure 6.7 Method of Zero Setting [HDR20L-32] 6-18
Figure 9.1 Manipulator Configuration 9-2

List of Tables

Table 1-1 Safety marking 1-5
Table 1-2 State of Robot Stop ..... **오류! 책갈피가 정의되어 있지 않습니다.**
Table 2-1 Basic Specifications for Models [HDR20L-32] 2-4
Table 2-2 Axis Motion 2-6
Table 3-1 Emergency Stop Time & Distance 3-15
Table 3-2 Allowable Load Torque 3-17
Table 3-3 Allowable Moment of Inertia 3-18
Table 3-4 Inertia moment from weight center by block 3-24
Table 4-1 Inspection Schedule 4-2
Table 4-2 Inspection Items and Periods 4-3
Table 4-3 Inspection part for main bolts 4-5
Table 4-4 Standard for Timing Belt tension 4-8
Table 6-1 Trouble phenomenon and cause 6-3
Table 6-2 Necessary Tools 6-10
Table 6-3 Tightening Torque 6-10
Table 6-3 Necessary Parts 6-10
Table 7-1 Spare Parts List 7-2
Table 8-1 Materials of each part 8-6

1

Safety

1.1. Introduction

The main purpose of this chapter is to describe the safety precautions for users and operators who repair and manipulate the industrial robot.

This manual describes safety precautions for robot manipulator and controller, in complies with the safety regulation of EU Machinery Directive 98/37/EC(2006/42/EC) and US OSHA. And the robot manipulator and controller is manufactured to comply with the safety standards EN ISO 10218-1:2011 and ANSI/NFPA 79:2021.

Every operator, who installs, replaces, adjusts, manipulates, maintains, and repairs, must read thoroughly and fully understand the manipulation and maintenance manual, in particular, the special attention must be paid to the WARNING symbol, the most important marking related to the safety.

Installation, replacement, adjustment, manipulation, maintenance, and repair of robot system must be performed by the personnel who was duly trained for these purposes, following the indicated operating procedure.

This company is planning and carrying out the relevant training such as maintenance, repair, and manipulation for the above operations, so robot users make sure that robot operators should get the relevant training. And make sure that the robot handling work should be carried out only by the operators who completed this training course.

Hyundai Robotics user of industrial robot has responsibility to observe the safety regulation related to robot adopted in corresponding countries and responsibility to design, install and operate safety equipment well in order to protect workers who work at robot system.

In high-risk areas concerning robot systems in which robots, tools, and accessories operate, there must be a method of protection to stop the workers or objects from entering the area according to ANSI/NFPA 79:2021.

The areas for which the robot can be applied and the environment in which it can be used are as follows.

Applicable areas

It is applied to the industrial robot used by installing on the surface of wall or plane (axes addable). It is also appropriate for controlling operation in the dotted section or consecutive section.

Major application is

- Spot welding
- Arc welding
- Cutting
- Handling
- Assembly
- Application such as Sealing
- Palletizing
- Grinding

For the other use than the above emergency application, make a contact with our company to consult on the robot use and possible applications.

Disable environment

Our robot must not be used in a highly explosive environment and the areas contaminated by oil, flammable materials or chemical materials. (Prohibited to be installed and manipulated.)

1.2. Relevant Safety Regulations

The robot is designed as per ISO 10218-1:2006 safety standards for industrial robots, and furthermore in comply with ANSI/RIA R15.06-1999 regulations.

1.3. Safety Training

All the personnel who intend to teach, operate or inspect the robot must be trained in an approved robotic operation and safety training course before start-up. The safety training course includes the following details:

- Purpose and functions of safety devices
- Safety procedure to handle the robot
- Performance of robot or the robot system and possible hazards
- Tasks associated with any specific robot applications
- Safety concepts, etc.

1.4. Safety Related Nameplate

1.4.1. Safety Marking

For the purpose of effective safety instructions, the following safety symbols are used in this manual.

Table 1-1 Safety marking

Symbols		Descriptions
Warning		Indicate a highly dangerous situation, meaning that operating or handling in a wrong manner could result in death or serious injury to personnel, or damage to equipment. Attention should be paid to the operation and handling.
Mandatory		Indicate the compulsory measures that should be taken
Prohibited		Indicate the prohibited actions and/or operations that should not be performed.

1.4.2. Safety Nameplate

Identification plates, warning label and safety symbols are attached to the robot and to the inside and outside of control panel. The designation labels and cable Mark for wire harness between the robot and control panel, and the cables inside/outside of control panel are provided.

All of these plates, labels, symbols and marks constitute safety-relevant parts of the robot and the control panel. They must remain attached to the robot manipulator and control panel at their clearly visible positions all the time for the safety and their full performance.

The painted markings on the floor and signs indicating dangerous zones must be clearly distinguished in form, color, and style from other markings on the machine near the robot system or inside the plant facilities where the robot system is installed.

It is forbidden to remove, cover, or paint over by way of spoiling the clearly visible identification plates, warning labels, safety symbols, designation labels and cable marks.

1.5. Definition of Safety Functions

Emergency Stop Functions – IEC 204-1,10,7

There is one emergency stop button on the controller and teach pendant respectively. If necessary, additional emergency buttons can be connected to the robot's safety chain circuit. The emergency stop function, which overrides all other robot controls, can bring the current operation to a halt by cutting off the power supply to the motors of individual axes. This function will also shut down the power supply to other dangerous functions, which are controlled by the robot, to prevent them from being used

Safety Stop Function - EN ISO 10218-1:2011

A safety stop circuit needs to be configured, and, through this circuit, each robot should be connected with the safeguards and interlocks. The robot should have a number of electrical input signals which can be used to connect external safety devices, such as safety gates, safety pads, and safety lamps. These signals allow the robot's safety functions to be activated by all equipment, including peripheral equipment and the robot itself.

Speed Limitation Function - EN ISO 10218-1:2011

In a manual mode, the maximum speed of the robot is limited to 250 mm per second.
The speed limitation applies not only to the TCP(Tool Center Point), but to all parts of manual mode robot. The speed of equipment mounted on the robot should be possibly monitored.

Restricting working Envelope - ANSI/NFPA 79:2021

Operation area of each axis is restricted by soft limit and hardware limit. Axis 1, 2, and 3 can also be restricted by means of mechanical stopper.

Operation Mode Selection - ANSI/NFPA 79:2021

The robot can be operated either in the manual mode or auto mode. In the manual mode, the robot can be operated only by using the teach pendant.

1.6. Installation

1.6.1. Safety Fence

Install safety fence against the possible collision between the robot and workers, so that no worker may approach the robot.

Install safety fence against the possible collision between the robot and workers, so that no worker may approach the robot. When operators or other personnel enter the robot's working envelope by accident, it may cause an accident. Install the safety fence to stop the robot when one, who intends to replace for TIP DRESSING or TIP changing replacement, or to inspect welding equipment, opens the fence gate and approaches the equipment during operation.

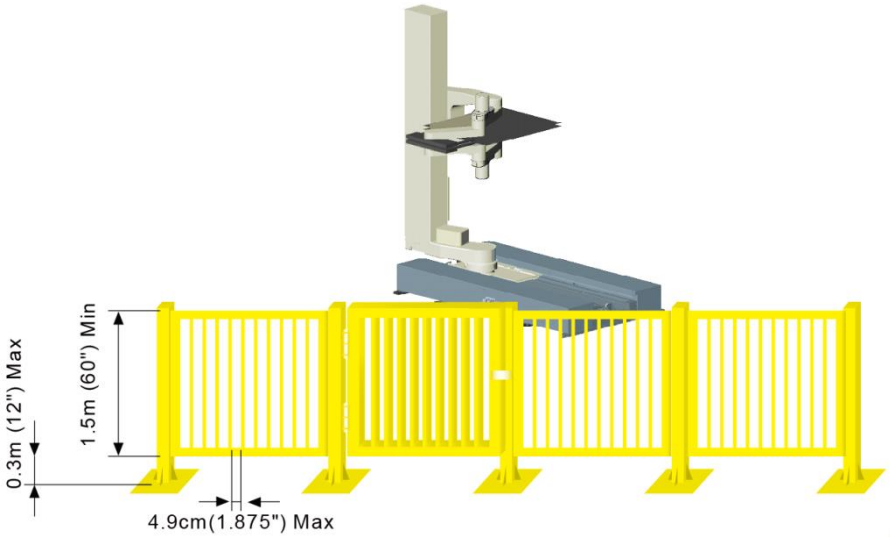

Figure 1.1 Recommended size for safety net and entrance gate (slot type entrance gate)

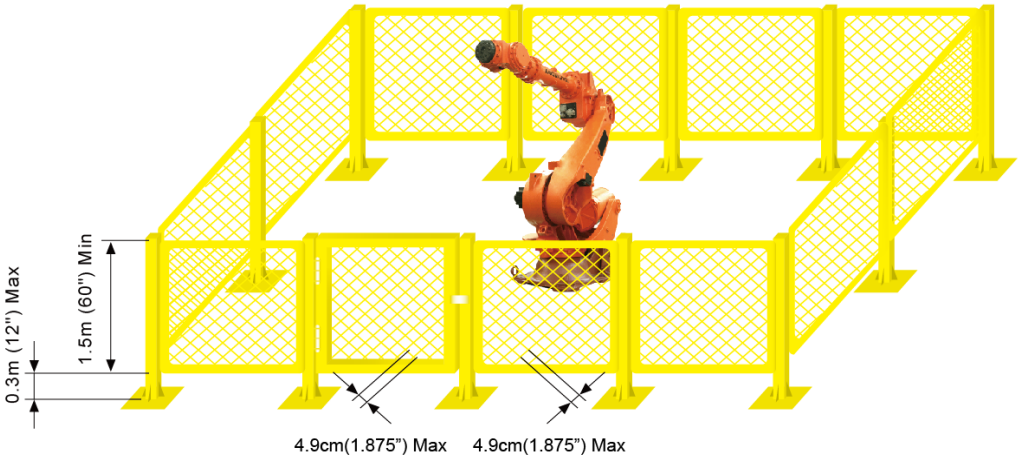

Figure 1.2 Recommended size for safety net and entrance gate (square type entrance gate)

(1) Enough space for safety net should be secured by covering robot operating area so as that workers would not have difficulty in teaching work or repairing work, and the safety net should have solid structure in order that it would not move easily and man cannot enter over easily.

(2) Safety net should be installed by static type in principle, and should not have hazardous parts such as prominence and depression or keen part, etc.

(3) Install the safety fence with an entrance gate, and register the safety plug at the gate so that it does not open unless pulling the plug out. Wiring should be carried out in a way that the robot should be in the operation ready OFF status as well as in the motor OFF status when the safety plug is pulled out or safety net is open.

(4) In order to operate the robot with the safety plug pulled out, wiring should be carried out in a way that will allow the playback to take place at a low speed.

(5) The emergency stop button should be installed at a place where it can be pushed quickly by the operator.

(6) If no safety net is to be installed, devices such as photoelectric switches, and mat switches, should be installed, instead of the safety plug, to cover the overall area within the robot's operation range in a way that the robot can be stopped automatically when a person enters the robot's operation range.

(7) Operation area of robot (hazardous area) should be distinguished by the method like painting on floor.

1.6.2. Placement of Robot & Peripheral Equipment

Please make sure that robot and peripheral equipment should be arranged by following method.

(1) In case of connecting primary power of controller or peripheral devices, please work after checking whether supply power has been deleted. There is a possible danger of electric shock because the high voltage such as 220V and 440V is used as its primary power.

(2) Post a sign [No enter during operation] up the safety fence gate, and inform the operators of its purport.

(3) Arrange such devices as controller, interlock panel, and other manipulation panels to be handled outside of the safety fence.

(4) When installing operation stand, install the emergency stop button on the stand. Make sure that stopping in an emergency situation can be initiated from any place from which the robot is operated.

(5) Make sure that the robot manipulator and the wiring and piping of controller, interlock panel, and timer should not be placed in the way of operator's working range so that they would not be directly stepped on by FORK and LIFT. Otherwise, the operator may suffer electrocution or the wire may suffer disconnection.

(6) Place the controller, interlock panel, and handling stand within the sight of robotic performance. It may cause a major accident to operate the robot while the robot is malfunctioning in an area where the robot’s activity can not be observed, or while the operator is working on it.

(7) Restrict the robot's working envelope by using the soft limits and the mechanical stopper if the necessary working envelope is narrower than the robot’s workable envelope. When the robot is to move beyond the restricted envelop due to abnormal operation, such as the robot being handled in a wrong way, the robot will be stopped automatically in advance thanks to the function that restricts the workable envelop.

(8) During the welding work, spatter could fall down to workers or the workers could be injured by burning, or fire could break out. Install such devices as a glare shield or a cover in the full sight of robot's working envelope.

(9) Make sure that the device indicating the robot's running condition, whether automatic or manual mode, can be noticeable even from a slightly distant location. In the case of

automatic start-up, a buzzer or a warning lamp will be useful.

(10) Make sure that there is no projecting part in the robot's peripheral equipment. Cover it, if necessary. It usually could cause an accident if the operator comes in touch with it. And it may cause a major accident when the operator tumbles while being astonished at the sudden movement of the robot.

(11) Don't make the system designed to allow the workers to carry the Work in and out using their hands through the safety fence. It could be a cause of accident associated with compressing or amputating.

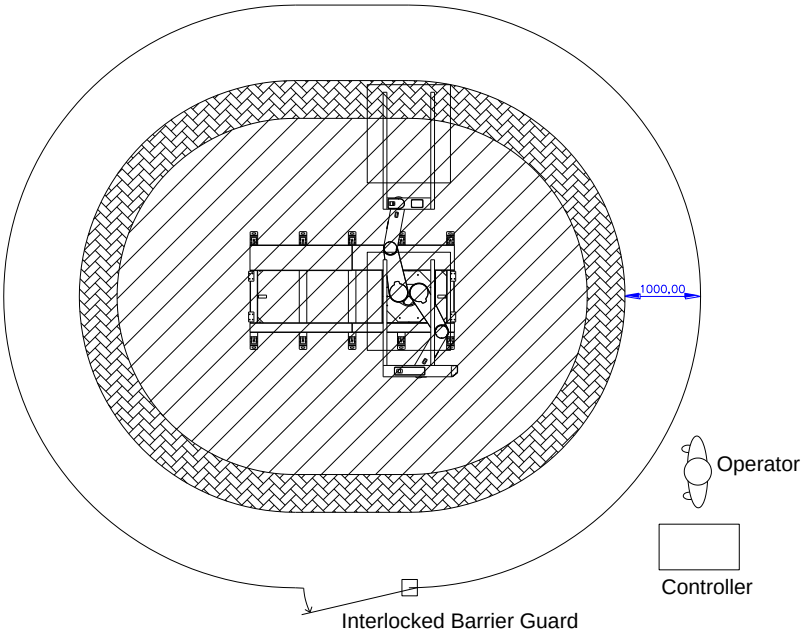

(Cylinder type)

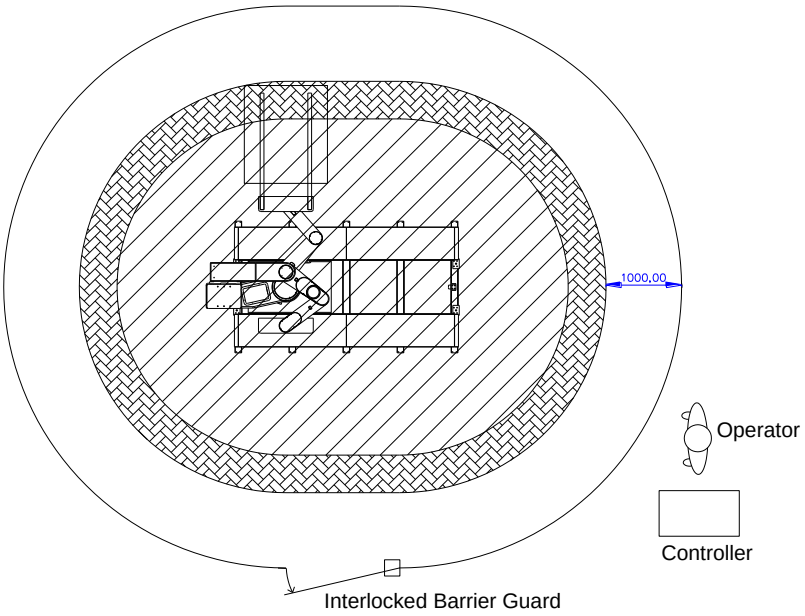

(Beam type)

Restricted space | Maximum space | Safeguarded space

Figure 1.3 Arrangement of LCD robot peripheral devices and workers

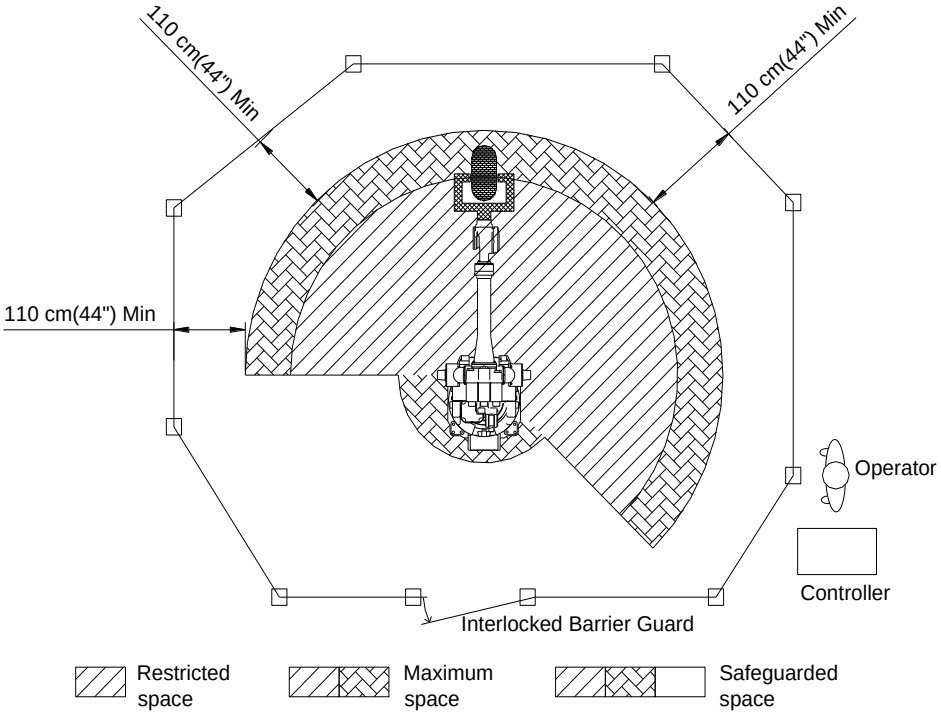

Figure 1.4 Arrangement of general robot peripheral devices and workers

1.6.3. Installing the Robot

Please install the robot in accordance with following method surely.

Install the robot as per the planning and layout which has been previously reviewed and studied for its optimized performance and functionality. In case of poor conditions for robot installation, the serious problems can take place, including error of relative position between robot and workpiece during operation, bad performance quality of robot caused by vibration, shortening lifetime, and cause of serious accidents. Thus, pay attention to the following precautions when installing the robot.

General Safety Precautions

(1) Design and install the robot system properly in compliance with laws, regulations, and safety requirements enable in the country where the robot system is installed.

(2) All the workers for the robot system must have the complete knowledge on the information specified in the application and supplementary manual, and proficiently operate and handle the industrial robot.

(3) Installation workers of robot must follow the safety instructions and apply them to the installation when they face any safety problems.

(4) System provider must ensure that all the circuits utilizing safety functions perfectly perform in a safe way.

(5) Install main power supply to be disconnected from outside of the robot's working envelope.

(6) System provider must ensure that all the circuits utilizing emergency stop function perfectly perform in a safe way.

(7) For the immediate emergency stop, install emergency stop button within the accessible distance for the operator.

Technical Safety Precautions

(1) Eliminate any interference with peripheral equipment considering the dimension and working envelope.

(2) Avoid such place for installing which is directly exposed to the sun, extremely humid, contaminated by oil or chemicals, and containing a large amount of metal powder and explosive gas.

(3) Install at the ambient temperature ranged 0~45℃.

(4) Secure sufficient space for the easier disassembly and maintenance.

(5) Install safety fence with a gate, and prohibit any person from entering the robot's working envelope.

(6) Remove any obstacles out of the robot's working envelope.

(7) Take a special measure, considering thermodynamics of controller, if the robot is installed near the heating elements or places exposed directly to the sun.

(8) Take a special measure if the robot is installed in a place of abundant dust such as metal powder in the air.

(9) Install the robot not to transmit welding electric current. In other word, insulate SPOT GUN with/from the robot's wrist.

(10) Grounding is very critical in preventing electric shock and malfunction caused by noise, and thus install as following instructions.

① Install an exclusive grounding terminal using class 3 or higher. (For the input voltage of 400V of higher, use special class 3 or higher.)

② Connect grounding line into the grounding bus-bar inside of the control panel.

③ In case of direct grounding on the floor by anchoring, two-point grounding both by robot manipulator and by controller can produce a "ground loop" and contrariwise cause abnormal operation. In this case, connect the grounding line to the base of robot manipulator and disconnect the second grounding point to the controller. If the robot vibrates even after stopping, double-check the grounding status because the possible main causes could be an incomplete grounding or "ground loop".

④ In the use of internal transgun(GUN), there is a possible danger of dropping because the primary power cable is directly connected to the spot gun. In this case, directly connect the grounding line to the base of robot manipulator in order to prevent any electric shock and protect the control panel, but do not connect it to the controller.

1.6.4. Space for Robot Installation

Install robot after securing sufficient space for maintaining the robot manipulator, controller, and other peripheral equipment. To install the main body and controller, please secure the above mentioned installation area. Install controller outside of the safety fence in order to monitor the robot manipulator and to operate in a safe way.
When installing, be sure to make it easier to perform the maintenance when opening the Controller door. Secure the available space. The specifications of the controller can change according to the type of the controller. (For more details, please refer to the "Maintenance manual".)

1.7. Safety Operation for Robot Handling

Follow the safety instructions to prevent any accidents. Don't modify nor ignore safety devices or circuits at any time, and be careful of electric shock.
All the normal operations in an automatic mode must be performed outside of the safety fence. Check the robot's working envelope if anyone is inside before operating.

1.7.1. Safety Precautions for Robot Handling

Please observe following countermeasures because safety is very important for the test operation of the robot.

(1) Do not handle the robot other than such personnel as operators handling the robot and other possible operators and supervisors who were designated as whom duly trained in an approved robotic training course and become familiar enough with the proper operation of the safety and robotic functions.

(2) Be sure to wear helmets, goggles, and safety shoes.

(3) Perform the work in pairs. One person must be ready to press the emergency stop button in an emergency while the other must perform his work quickly but carefully within the robot's working envelope. Always check the escape route before working.

(4) Make sure that there is no one in the working envelope when the power source is on.

(5) Operations such as teaching must be performed outside of the robot's working envelope. However, if the operation is performed within the working envelope after stopping the robot, enter the envelope with safety plug or key switch for converting to automatic mode. Make sure that other operators do not change it into automatic mode by accident. Also, pay close attention to the specific direction of robotic movement in case of abnormal operation and malfunction.

(6) Supervisors should follow the instructions below.
① Be located at a place where you could take an entire view of robot, and commit yourself to monitoring.
② Press the emergency stop button immediately when abnormality is found.
③ Anyone is forbidden to be near the operating area other than those who are engaged in the operation.

(7) In a manual mode, the speed of teaching is limited to 250mm/sec.

(8) In teaching, post a sign [Under Teaching].

(9) Operators must pull the safety plug out, and enter the safety fence with the plug.

(10) Do not use any devices causing noise in and around the teaching area.

(11) Handle the teach pendant button, while checking the teaching point with your naked eyes, and do not handle it just relying on your sense.

(12) It is a repairing part to be prepared for when you buy many sets.

(13) In teaching, check and examine carefully under your feet. In particular, in high teaching for more than 2M, secure a safe zone on which you may step before teaching.

(14) Instructions for any abnormal operations.

① Press immediately the emergency stop button when any abnormal operations are found.

② Be sure to check if the relevant equipment is stopped when checking the abnormality in an emergency stop.

③ In case that the robot stops automatically due to power failure, investigate possible causes and take actions after confirming that the robot completely stops.

④ In case of malfunction of emergency stop devices, immediately disconnect the main power and investigate possible causes to take necessary actions.

⑤ Investigation of the failure must be conducted only by a designated person. For the re-operation after emergency stop, operators must clarify the cause of failure and take necessary actions, and then operate the robot again following the proper procedure.

(15) Write out the operating rules proper to working details and installing location regarding the operation and handling method for the robot, and the necessary actions for robot's any failure. In addition, it is recommended to operate the robot in accordance with the operating rules.

(16) Instructions when the robot stops

Make sure not to approach the robot even when it seems to be stopped. Most accidents occur from a sudden movement of robot which seemed to be stopped when one approaches it. The conditions that the robot stops are as follows.

Table 1-2 State of Robot Stop

No.	State of Robot	Drive Power	Access
1	Pause (Minor failure, Pause switch)	ON	X
2	Emergency stop (Major failure, Emergency stop switch, Safety gate)	OFF	O
3	Input signal standby of peripheral equipment (START INTERLOCK)	ON	X
4	Playback Completion	ON	X
5	Standby	ON	X

Even in the accessible state of robot, be watchful against any possible sudden movement of robot. Make sure to avoid approaching the robot without precautions for emergency under all circumstances.

- **During temporary halt, the entrance countermeasure same as entrance of teaching work should be considered at the case (nozzle contact, welded part detected, arc error, and so on) of opening entrance gate for simple management against error.**

(17) Clean up any split oil, tools, and impurities in the safety fence after completing robotic operation. Accidents such as conduction may occur in the working envelope contaminated by oil, or scattered tools on its floor. Make a habit of organizing and cleaning things up.

1.7.2. Safety Precautions for Operating Test

Please observe following countermeasures because safety on robot operation is very important.

In case of operating test, errors in design or teaching and inferiority in manufacturing are possibly seen in the entire system such as teaching program, jig, and sequence. Thus, be more careful and safe in case of operating test. Accidents may occur by these combined causes.

(1) Before handling, check the stop buttons and signal functions to stop the robot such as emergency stop button or stop button. And then, check the abnormality - detective movements. Above all, it is the most critical to check all the stop signals. It would be the most important to stop the robot when any possible accidents are predicted.

(2) In case of operating test, start the robot at low speed(approximately 20%~30%) in the variable speed function, and repeat it more than one cycle to check the movements. If any errors are found, immediately correct them. After then, increase in speed (50% → 75% → 100%) gradually, and repeat more than one cycle respectively to check the movements. Operating at high speed from the very beginning may cause a serious accident.

(3) In case of operating test, it is hard to predict what problems would happen. Do not enter the safety fence during operating test. Unexpected accidents are likely to occur because of its low reliability.

1.7.3. Safety Precautions for Automatic Operation

Please observe following countermeasures because safety on robot automatic operation is very important.

(1) While posting a sign [Do Not Enter During Operation] up the safety fence gate, ask the operators not to enter during operation. If the robot stops, you may enter the safety fence under your full understanding of the situation.

(2) Be sure to check if any operators are inside of the safety fence when starting the automatic operation. Operating without checking the presence of operators may cause a personal injury.

(3) Before starting the automatic operation, check and confirm that the program number, step number, mode, and starting selection are in the possible state for automatic operation. If starting with the other programs or steps selected, the robot could move in an unpredicted way, and lead to an accident.

(4) Before starting the automatic operation, check if the robot is properly located to get started. Check whether the program number or step number is identical with the location of robot. Even if it's all identical, accidents are still possible to occur due to an abnormal movement when the robot is differently located.

(5) Be prepared to immediately press the emergency stop button when starting the automatic operation. Immediately press the emergency stop button in case of robot's unexpected movements or emergency.

(6) Be sure to detect any abnormalities by checking the route, condition, or sound of robot movement. Sometimes the robot may be abnormally operated including a sudden break down. However, it will show a certain indication before the break down. Understand the robot's normal condition well in order to catch the symptom in advance.

(7) When any abnormality is detected from the robot, immediately stop and take proper actions on it. Using the robot before any proper actions taken may cause an interruption of produce as well as serious failure leading to a very serious personal injury.

(8) When checking the robot's movement after the proper actions taken for the abnormality, do not operate the robot with operators inside of the safety fence. Unexpected accidents are possibly to occur because its low reliability may cause another abnormality.

1.8. Safety Precautions for Access to Safety Fence

Please observe following countermeasures because safety on robot automatic operation is very important.

The robot is very heavy and strong, even at low speeds. When entering the safety fence, one must observe the relevant safety regulations of its pertinent country.
The operators always must be aware of the unexpected movements of robot. Robots are able to move fast shortly after being stopped. The operators should know that the robot is able to move in a different route, without any notice, by means of external signals. Thus, when trying to stop the robot during teaching or operating test, one should be able to stop the robot with a teach pendant or control panel.

When entering the working envelope through the safety gate, you must take the teach pendant with yourself so that other people can not operate the robot. Make sure to post up the control panel a sign indicating the state of robot handling.

People must understand the followings when they are to enter the robot's working envelope

(1) Do not enter the working envelope other than teaching person.

(2) Operation set-up mode of controller must be a manual mode in the control panel.

(3) Always wear the approved working suite.(Do not wear a loose clothes as you please)

(4) Do not wear gloves when handling controller.

(5) Do not leave innerwear such as underwear, shirts, or necktie out of the working suite.

(6) Do not wear personal accessories such as big earrings, rings, or necklaces.

(7) Make sure to wear safety shoes, helmet, and goggles and if necessary, wear other self-protective outfit such as safety gloves.

(8) Make sure that the emergency stop circuit is working correctly and in its proper function, turns MOTOR OFF when pressing the emergency stop button in the control panel and teach pendant before handling the robot.

(9) Make your posture face-to-face with the robot manipulator when performing your work.

(10) Follow the predetermined working procedure.

(11) Be prepared for emergency exit or safe place considering that the robot may unexpectedly rush at you.

1.9. Safety Precautions for Maintenance and Repair

1.9.1. Safety Precautions for Controller Maintenance and Repair

Please observe following safety countermeasures on repair and check for robot controller.

(1) Maintenance and repair of the robot must be performed by the personnel who was duly trained in the special maintenance training course and has a good knowledge of maintenance.

(2) Perform your work following the maintenance procedures for controller.

(3) Perform your maintenance and repair in a safe way by securing emergency exit or safe place.

(4) Before the daily maintenance, repair, or changing parts, be sure to power down. In addition, post a warning sign [Do Not Input Power] up the primary power so that other operators may not input power by accident.

(5) When changing parts, be sure to use the specified ones.

(6) When you open the door of controller, you should turn off power, and please start working after 3 minutes.

(7) If sufficient illuminance is not secured when you perform maintenance and inspection inside the controller, you should use external lights.

(8) Please do not touch heat radiating plate of servo AMP and recovery resistance because they are very hot.

(9) After completing maintenance, be sure to close the door completely after checking if tools or other things are still remained in the controller.

1.9.2. Safety Precautions for Robot System & Manipulator Maintenance

Please observe following safety countermeasures on repair and check for robot controller.

(1) Refer to the safety precautions for Controller maintenance and repair.

(2) Perform your maintenance and repair for the robot system and manipulator, following the indicated procedures.

(3) Be sure to disconnect the primary power of controller. Post the warning sign [Do not input power] up the primary power to prevent other workers from connecting the power.

(4) Make sure that the Arm is fixed and immovable before maintenance and repair since dropping or moving of the robot's Arm may cause a danger during maintenance and repair. (Refer to the 『Robot manipulator maintenance manual』.)

1.9.3. Necessary Actions after Maintenance and Repair

Please install the robot in accordance with following method surely.

(1) Check if the cables or parts of controller are properly connected.

(2) After maintenance is completed, carefully check that no tools are left around or inside of the controller and manipulator. Make sure that the door is firmly closed.

(3) Do not turn on the power if any problems or critical failures are detected.

(4) Be sure that there is no one within the working envelope, and that you are in a safe place before turning on the power.

(5) Turn on the main circuit breaker on the control panel.

(6) Check the current position and status of robot.

(7) Operate the manipulator at low speed.

1.10. Safety Functions

1.10.1. Operating a Safety Circuit

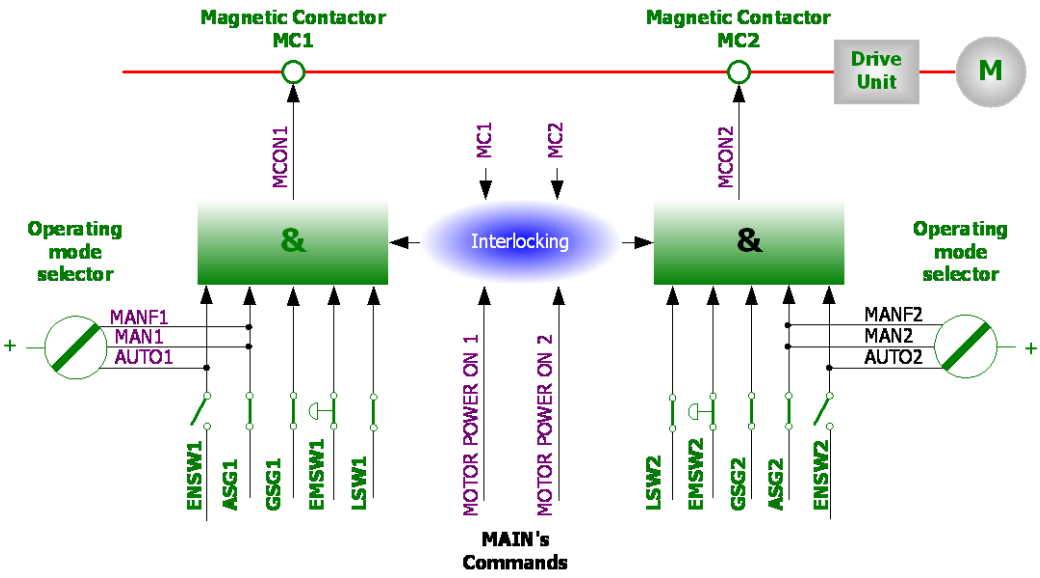

Figure 1.5 Configuration for safety chain

The robot's safety system is based on a two-channel safety circuit that is continuously monitored. If an error is detected, the power supply to the motors is disconnected and the motor brake is applied. To return the robot to MOTOR ON mode, the switches of two-channel circuit must be connected. If one of the two-channel circuit switches shorts, the contactor of motor will be disconnected leading to the application of brake, and finally the robot will be stopped. Furthermore, when safety circuit is disconnected, the interrupting call will be sent automatically to the controller to find out the possible reason for the interruption.

The safety control circuit of operation is based on dual safety electric circuit in which the controller and MOTOR ON mode are operated interactively. In order to be in MOTOR ON mode, the safety circuit consisted of several switches must be all connected. MOTOR ON mode indicates that drive power is supplied to the motors. If one of the contactors is disconnected, the robot will always return to MOTOR OFF mode.

MOTOR OFF mode indicates that drive power is removed from the robot's motors and the brakes are applied. The status of the switches is displayed on the teach pendant. (Refer to the I/O monitoring screen of "SERVICE" menu, 『Operation manual』.)

Safety circuit

The emergency stop buttons on the controller panel and on the teach pendant and external emergency stop buttons are included in the safety circuit of operation. Users may install the safety devices (safety plug, safety stop device for safe place) which are operated in the AUTO mode. In a manual mode, the signals of these safety devices are ignored. You can connect the general safety stop devices that is active in all operating modes. No one can enter the working envelope in an automatic operation mode due to the unconditional operation of the safety devices (door, safety mat, safety plug etc.). These signals are also generated in a manual mode, but the controller will keep the robot operating while ignoring the robot's teaching. In this case, maximum speed of robot is restricted to 250mm/s. Thus, the purpose of this safety stop function is to secure the safe area around the manipulator while one approaches the robot for maintenance and teaching.

When the robot is stopped with the limit switch, change the robot's position by operating it with the pendant key at the constant setting mode. (Constant setting mode refers to the state of entry into the menu『[F2]: System』 menu)

The safety circuits must never be by-passed, modified or changed in any way.

1.10.2. Emergency stop

An emergency stop should be activated when people or equipment is located at the dangerous area. The emergency stop buttons are located both on the control panel and on the teach pendant.
All safety control devices such as emergency stop buttons on the control panel must be located outside the working envelope and easily accessible at any time.

Status of Emergency stop

When the button is pressed, the robot will operate as follows.
Robot stops immediately in any cases.

- Disconnect the servo system power.
- Motor brake is activated.
- Emergency stop message is displayed on screen.

For the emergency stop, the following two methods can operated simultaneously.

(1) Emergency stop for control panel and teach pendant (Basic)

Above the control and teach pendant console.

(2) Emergency stop of external system

External emergency stop device (button etc.) can be connected to the safety electric circuit in accordance with applied standard for the emergency stop circuit.
(Please refer to system board in "basic configuration of controller") At this time, the emergency stop must be connected to be "Normal On" and it must be check for proper operation during test run.

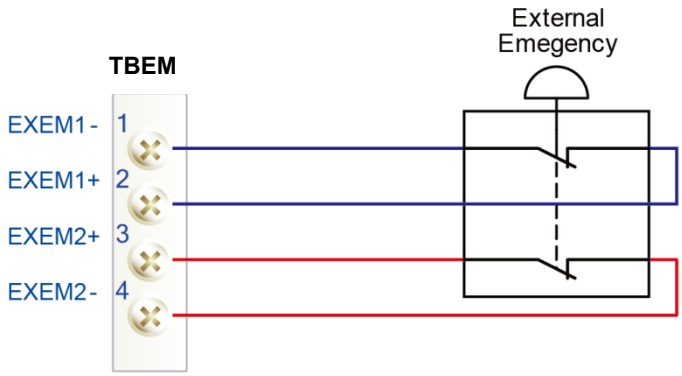

Figure 1.6 Connection with external emergency halt switch through system board terminal block TBEM

1.10.3. Operating Speed

To teach the robot, the operating mode switch must be in a MANUAL mode. Then the maximum speed of robot is limited to 250mm/s.

1.10.4. Connecting the Safety Devices

External safety devices such as light beams, light curtains, safety plug, and safety mats which can be adapted by the system builder execute interlocking the controller by way of connecting with safety circuit within the controller. These devices are used for safety device during execution of normal program in an automatic mode.

1.10.5. Restricting the working Envelope

When the robot is not necessary to reach certain area for specific applications, working envelope of the robot can be limited to secure the sufficient safety working area. This will reduce the damage or loss in case of robot's collision with external safety devices such as safety fence, etc. The movement of axes 1, 2, and 3 of HR, HX, HS and HA can be limited by means of mechanical stopper or electrical limit switches. In this case, the corresponding software limitation parameters must be also changed. If necessary, movement of wrist 3 axes can be restricted, too. Limitation of working envelope for all the axes could be carried out by the user. The robot is delivered to customer as the status of full working envelope setting.

- **Manual mode: Maximum speed is 250mm/s.**
  In a manual mode, by means of worker's selection, workers may enter the safeguard area.

- **Auto mode : The robot can be operated via remote controller.**
  All safety devices such as safety door, safety mats, etc. are activated.
  No one may enter the safety device area of robot.

1.10.6. Monitoring Function

(1) Motor monitoring functions
Motors are protected against overload by means of onboard sensors.

(2) Voltage Monitoring Function
For the protection of, the servo amp module turns off the power switch when the voltage is too low or too high.

1.11. Safety Related to End Effectors

1.11.1. Gripper

(1) When a gripper is used to grip a workpiece, there should be safety precautions for unexpected dropping of the loaded workpiece.

(2) When any end effectors or devices are installed on the robot arm, use the required size and piece of bolt, and securely fasten as per the required torque using torque wrench. Do not use the bolt which has rust or dirt on its surface.

(3) End effector must be designed and manufactured not to exceed the maximum allowable load at the wrist of robot. Even though power or air supply stops, the gripped workpiece must not be dropped from the gripper. In order to remove any risks and problems which may cause personal injury and/or physical damage, the sharp edge and projecting part of end effector must be made dull and smooth.

1.11.2. Tool / Workpiece

(1) It must be possible to replace tools such as milling cutters in a safe manner. Make sure that safety devices are working correctly until the cutters stop rotating.

(2) Tool must be designed to keep in gripping workpiece securely even though a power failure or a control failure takes place. It must be possible to release workpiece from the gripper in a manual mode.

1.11.3. Pneumatic and Hydraulic Systems

(1) The special safety regulations will apply to pneumatic and hydraulic systems.

(2) Since residual energy of pneumatic and hydraulic systems can be still remaining even after the robot stops, particular care and attention must be paid by users. Internal pressure of equipment must be removed whenever starting the repair work for pneumatic and hydraulic systems.

1.12. Liabilities

The robot system has been built in accordance with the latest technical standards and approved safety rules. Nevertheless, the serious accidents such as death or personal injury still may take place due to the collision between the robot system and peripheral equipment.

The robot system must be used by operator who has a full technical knowledge on its designated use and also pay his close attention to the possible dangers and risks involved in its operation. The use of robot system is subject to compliance with these operating instructions and the operation and maintenance manual supplied together with the robot system. The safety related functions of robot system must not be used for any purposes other than safety.

When you use the robot system for any other or additional purposes than its designated usage, you must review whether it is enable in accordance with design criteria. The manufacturers cannot take any responsibility for any damage or loss which resulted from such misuse or improper use. The users shall have the full responsibility for the risks caused by such misuse or improper use. When you use and operate the robot system for its designated use, you must have a good command of all the information contained at these operating instructions as well as the maintenance manual.

The robot system may not be put into operation until it is ensured that the functional machine or plant into which the robot system has been integrated conforms to the specifications of the EU Machinery Directive 98/37/EC(2006/42/EC) and US OSHA.

The following harmonized standards in particular were taken into account with regard to the safety of the robot system.

- ANSI/RIA R15.06-1999
  Industrial Robots and Robot Systems - Safety Requirements
- ANSI/RIA/ISO 10218-1-2007
  Robots for Industrial Environment - Safety Requirements - Part 1 - Robot
- ISO 11161:2007
  Safety of machinery - Integrated manufacturing systems - Basic requirements
- EN ISO 13849-1:2008
  Safety of machinery - Safety-related parts of control systems - Part 1: General principles for design (ISO 13849-1:2006)
- EN 60204-1:2006
  Safety of machinery - Electrical equipment of machines - Part 1: General requirements (IEC 60204-1:2005 (Modified))
- EN ISO 10218-1:2006
  Robots for industrial environments - Safety requirements - Part 1: Robot (ISO 10218-1:2006)

Users must take the full responsibility for any accident caused by their negligence or non-observance of these instructions. The manufacturer will not take any liabilities and responsibilities for any damages or losses caused by the misuse or malfunction of such equipment which is not included in the contract between manufacturer and user and provided by user, or such equipment which is installed around the robot system arbitrarily by the user. User must take the full liabilities and responsibilities for any risks and damages caused by such equipment.

2
Specifications

2.1. Format for the Robot Mechanical Part

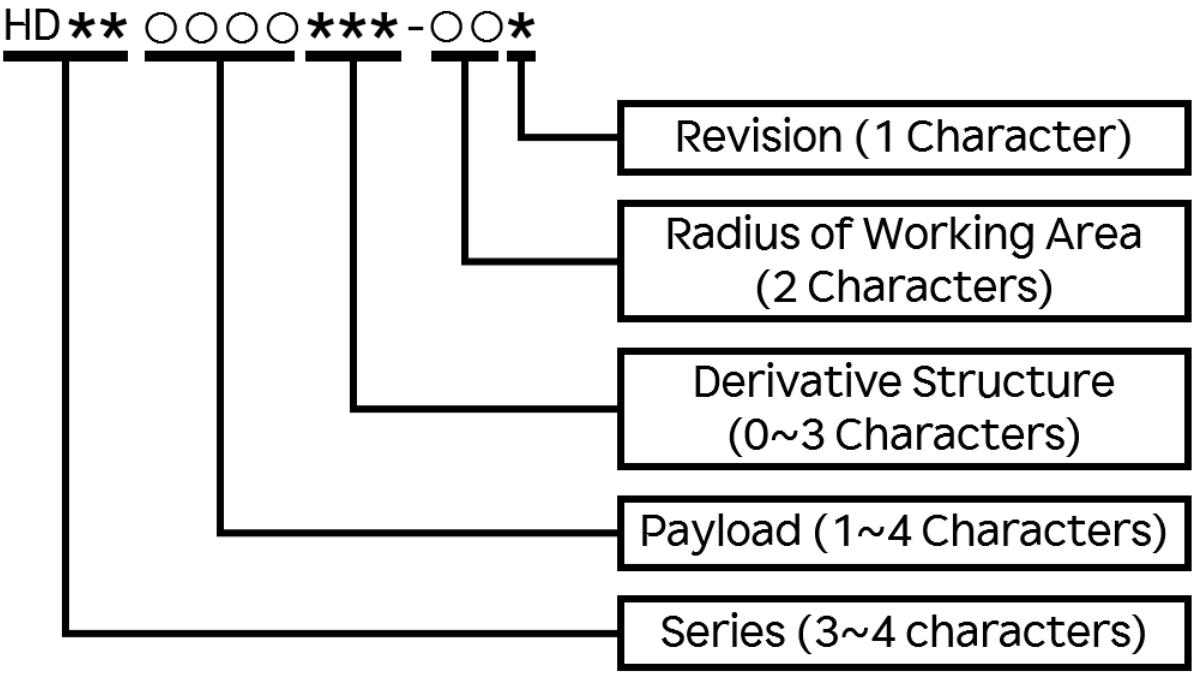

Figure 2.1 Format for the Robot Mechanical Part

2.2. Location of Robot Identification Plate

The robot type, serial number, and manufacturing date are written down in the nameplate. The nameplate is located on the bottom (left or right) of the manipulator, as shown in the picture below.

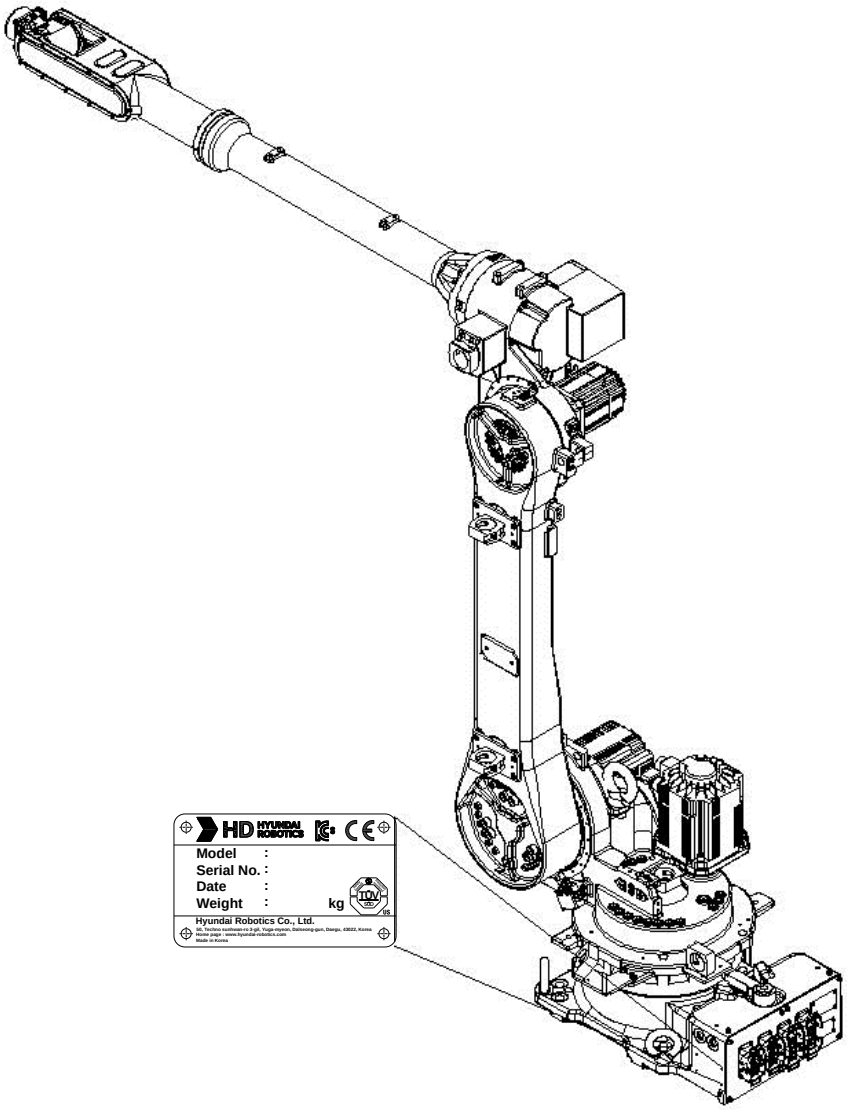

Figure 2.2 The Attachment Location of the Robot Nameplate

2.3. Basic Specifications

Table 2-1 Basic Specifications for Models [HDR20L-32]

Item				Specification
Model				HDR20L-32
Construction				Articulated
Degree of freedom				6
Drive system				AC servo system
Max. Working envelope	Arm	S	Swivel	±3.141 rad (±180°)
		H	For/Backward	+3.141 ~ -1.134 rad (+180°~ -65°)
		V	Up/ downward	+3.141 ~ -1.396 rad (+180°~ -80°)
	Wrist	R2	Rotation 2	±3.403 rad (±195°)
		B	Bending	±2.356 rad (±135°)
		R1	Rotation 1	±6.283 rad (±360°)
Max. Speed	Arm	S	Swivel	3.054 rad/s (175°/s)
		H	For/Backward	3.054 rad/s (175°/s)
		V	Up/ downward	3.141 rad/s (180°/s)
	Wrist	R2	Rotation 2	6.283 rad/s (360°/s)
		B	Bending	6.632 rad/s (380°/s)
		R1	Rotation 1	10.472 rad/s (600°/s)
Load Capacity				196 N (20kg)
Wrist Torque		R2	Rotation 2	39.2 N·m (4 kgf·m)
		B	Bending	39.2 N·m (4 kgf·m)
		R1	Rotation 1	19.6 N·m (2 kgf·m)
Accuracy of position repeatability[NOTE 1]				±0.07 mm
Ambient Temperature				0 ~ 45℃ (273 ~ 318 K)
Relative humidity				20 ~ 85 %RH
Robot's Weight				536 kg
Working envelope section area				18.61 m^2

[NOTE 1] Conforms to ISO 9283.

2.4. Robot Dimension and Working Envelope

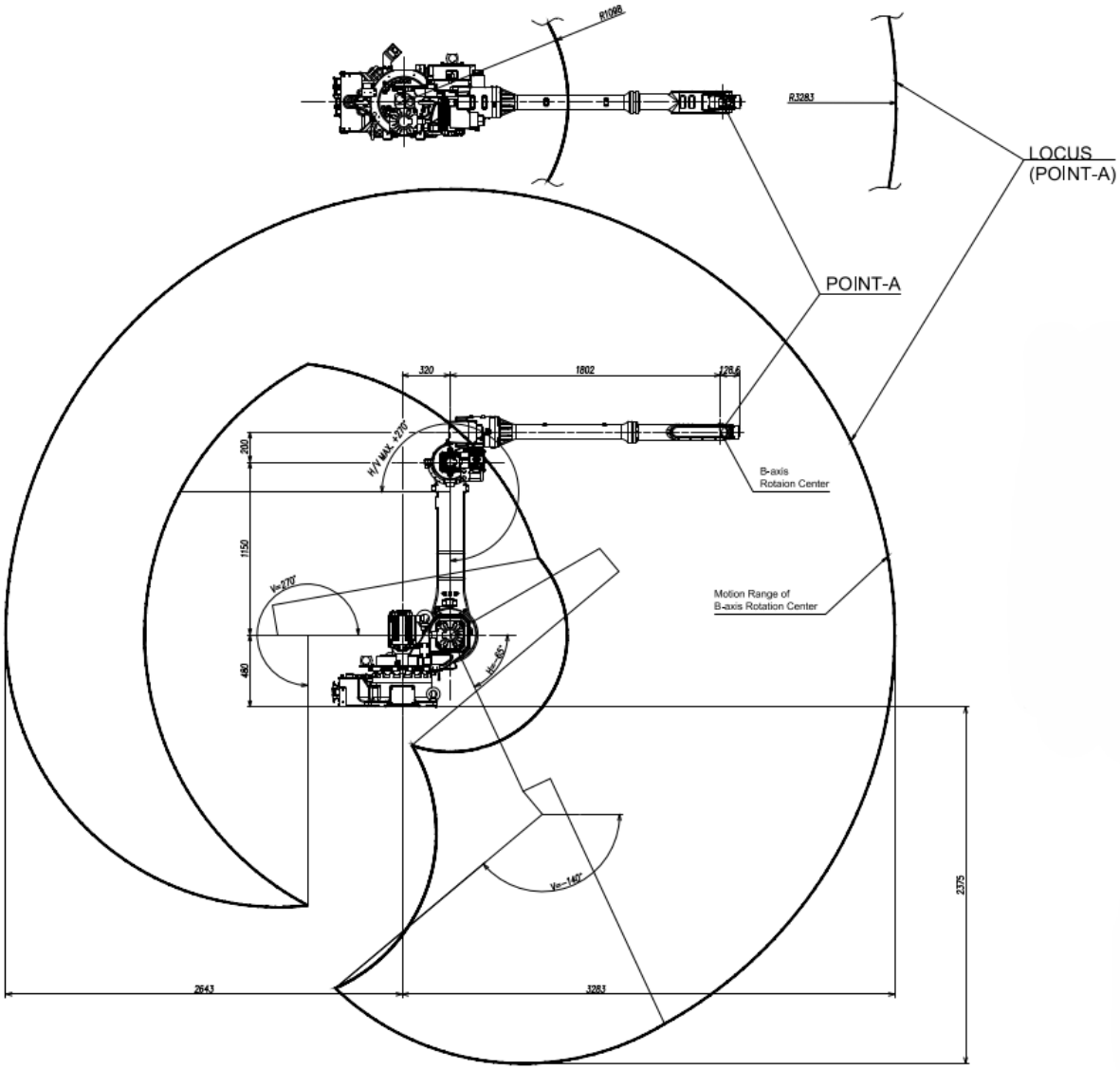

Figure 2.3 Robot Dimension and Working Envelope [HDR20L-32]

2.5. Axis Identification

Table 2-2 Axis Motion

Axis Name	Operation	Teach Pendant Button	
S	Arm Swivel	LFT(S+)	RHT(S-)
H	Arm Forward and Backward	BWD(H+)	FWD(H-)
V	Arm Upward and Downward	UP(V+)	DOWN(V-)
R2	Wrist Rotation 2	Rx+(R2+)	Rx-(R2-)
B	Wrist Bend	Ry+(B+)	Ry-(B-)
R1	Wrist Rotation 1	Rz+(R1+)	Rz-(R1-)

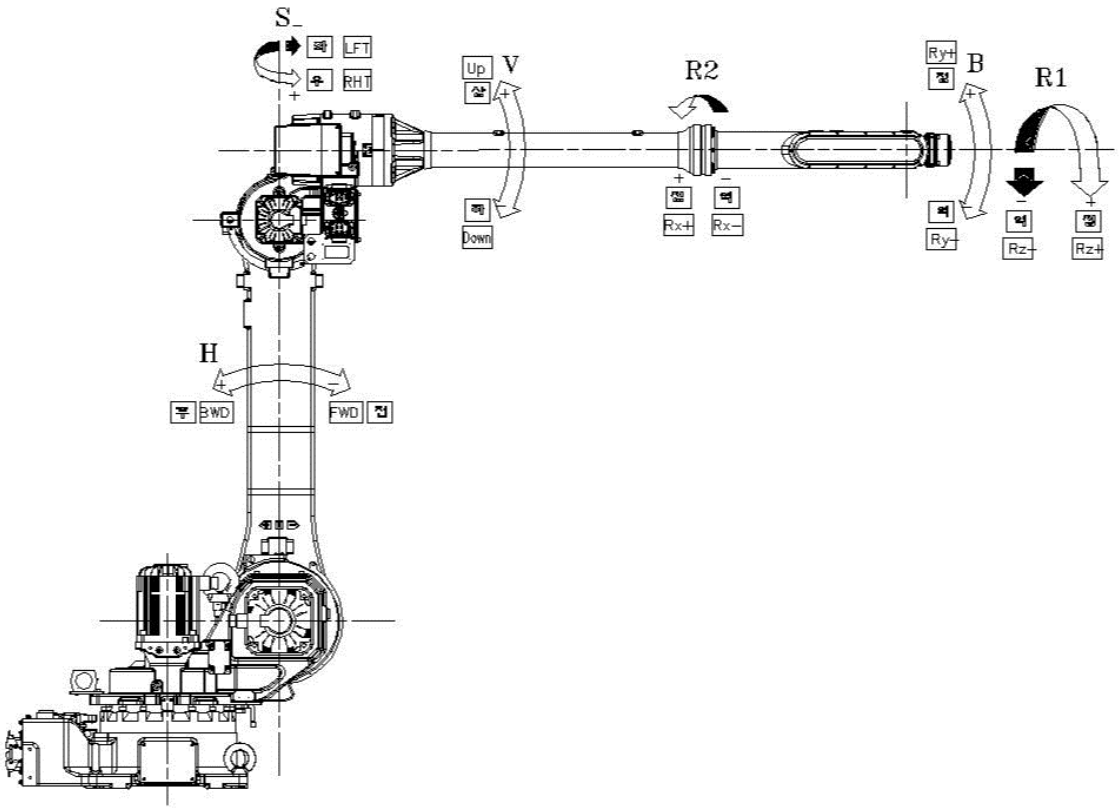

Figure 2.4 Robot Dimension and Axis [HDR20L-32]

2.6. Detailed Diagram of the Wrist Axis Attachment Surface

When attaching the operating tool to the mechanical interface of robot's wrist flange, fasten it with a bolt at P.C.D. 40.

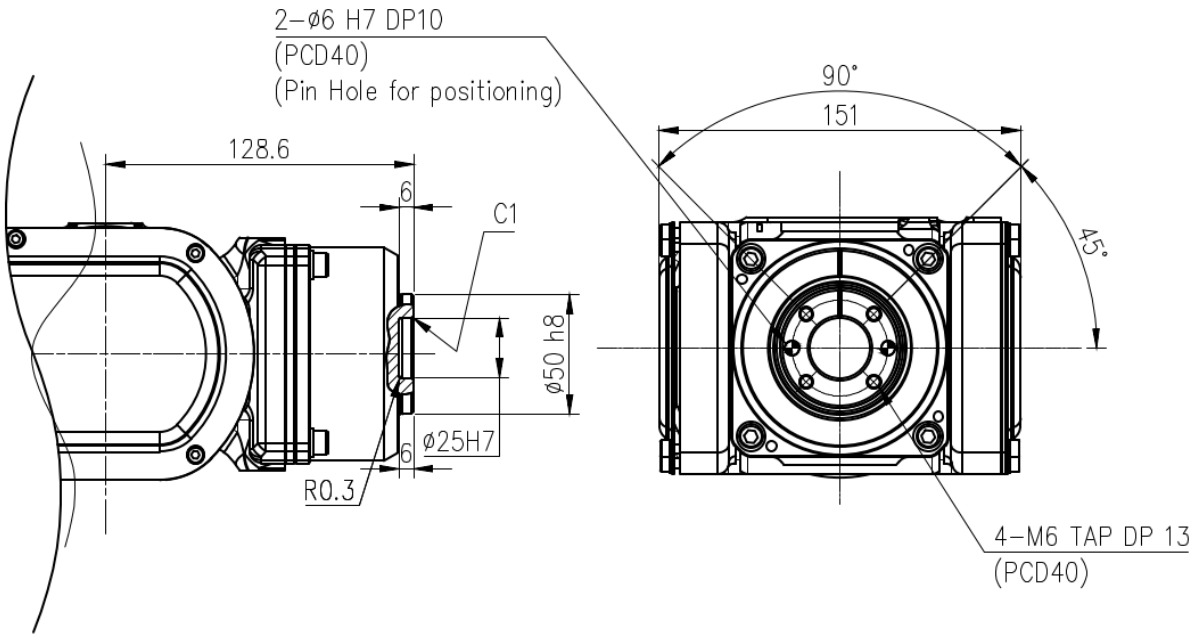

Figure 2.5 Detailed Diagram of the Wrist Axis Attachment Surface [HDR20L-32]

2.7. Detailed Diagram of ARM Frame Attachment Surface

The upper parts of the arm frame and arm pipe of the robots are attached using a tap designed to attach peripheral devices. Within the area marked with ▦, peripheral devices (valves, etc.) shall be attached.

[Attention]

Peripheral devices shall be attached either on the upper part of the arm frame or the upper part of the arm pipe. When attaching, be sure to the center position of gravity should be located within the range marked as ▦.

- Max weight on the ARM Frame : 20kg

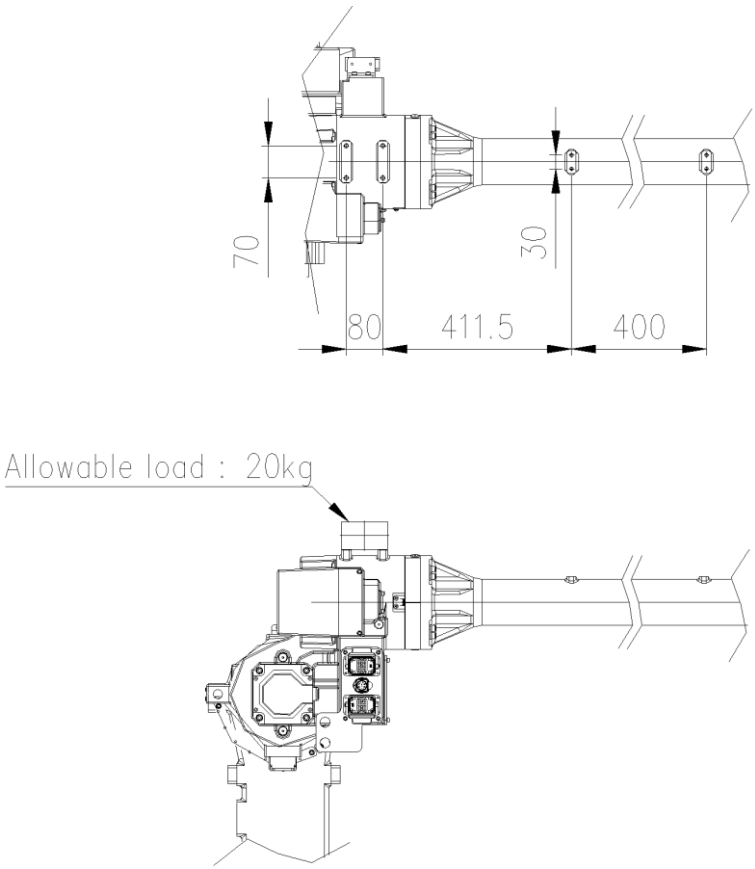

Figure 2.6 Detailed Diagram of Upper ARM FRAME Attachment Surface [HDR20L-32]

2.8. Application Wiring and Inspection Wiring Diagram

There are air unit and connector to connect the additional equipment to the robot manipulator. Application connectors are indicated as follows.

[Note] Max air pressure : 5bar (5.1 kgf/cm2, 72.5 psi)

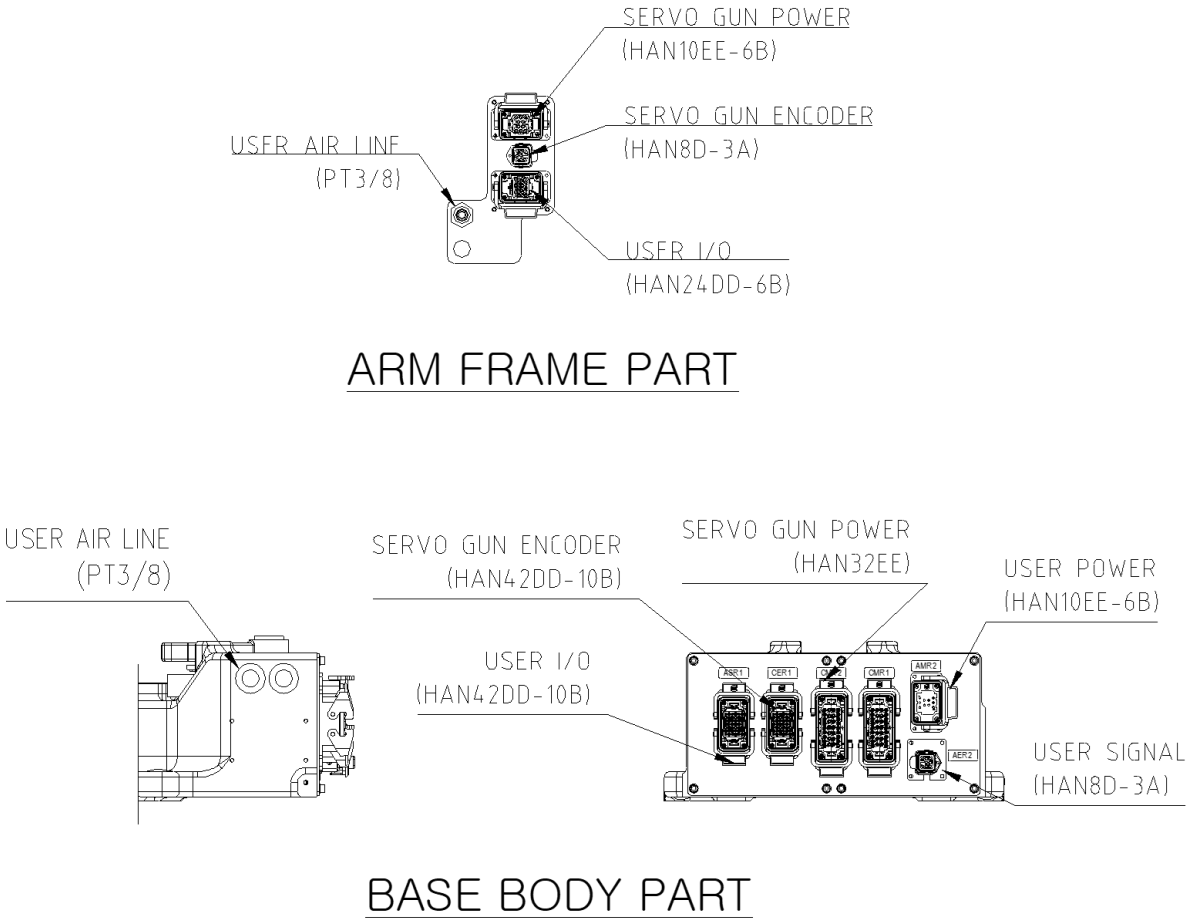

Figure 2.7 Application Wiring and Piping Diagram [HDR20L-32]

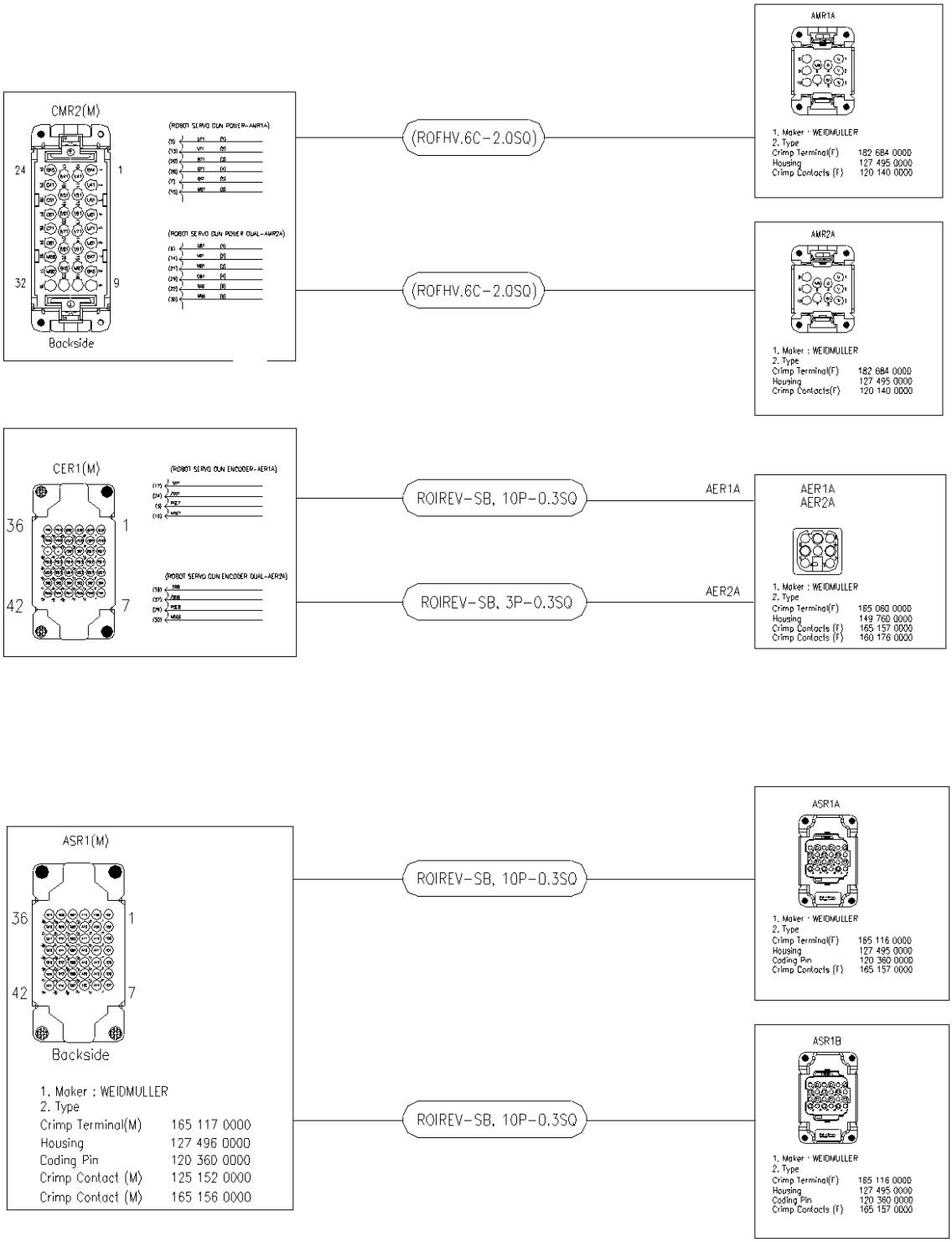

Figure 2.8 Details of Application Connector [HDR20L-32]

2.9. Restricting the Working Envelope

When installing the robot, take into account that the working envelope can be adjusted freely within the entire working envelope.

Limiting the motion range is useful when:

- During robot operation
- When the robot is likely to collide with another device
- When the length of the application cables or hose pipes are limited

There are three methods to use to limit the motion range of the robot as follows:

- Software limit (applied to the entire axis)
- Limit switch (1-3 axes: optional application)
- Mechanical stopper (1-3 axes)

[Warning]
The mechanical stopper is a physical device. The robot should not exceed the area occupied by the mechanical stopper. The mechanical stopper of a 1-3 axes is fixed. The mechanical stopper with a 4-6 axes is applied only within the software limits.

Once the mechanical stopper is collided with, its strength cannot be guaranteed. Therefore, please ensure it is replaced after impact.

2.9.1. Axis 1(Axis S)

By adding one more mechanical stopper, the working envelope of the 1st axis can be limited. (by 30˚).
If the 1st STOPPER BLOCK and STOPPER are deformed due to a great impact, they must be replaced.

3

Instructions

3.1. Robot Component Name

The following [Figure 3.1] show and name each component of the robot.

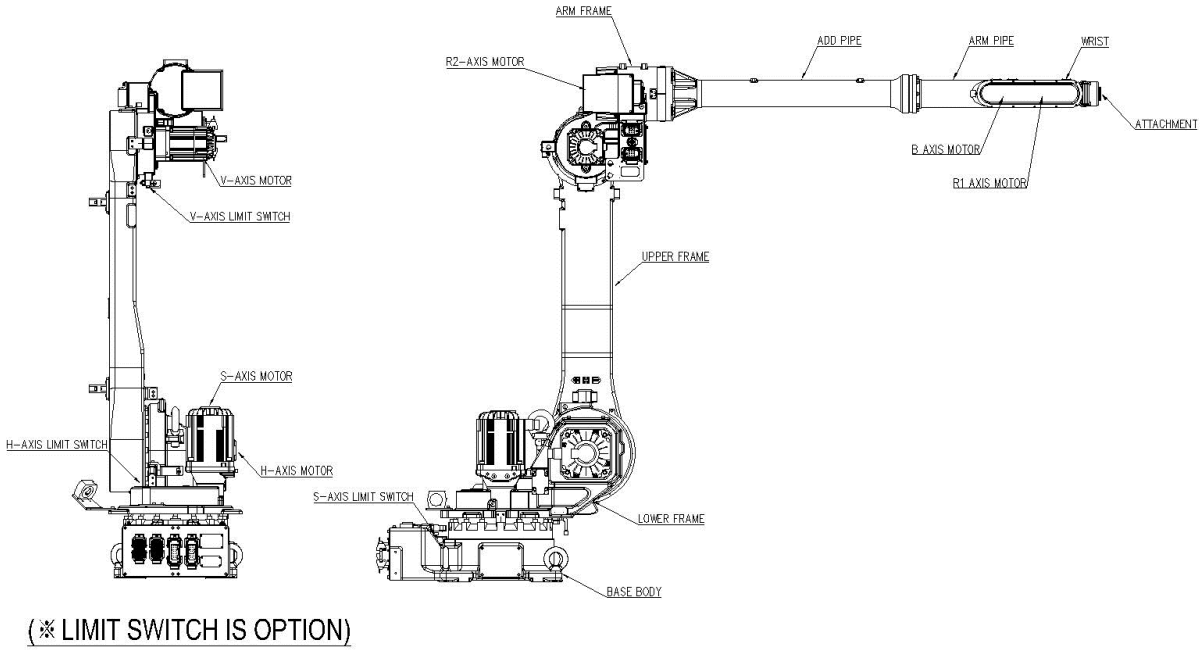

Figure 3.1 Name of Robot Components

3.2. Location of Safety Nameplate

In order to prevent any accidents, safety marking plates such as [Figure 3.2] are attached to the robot. Do not remove or replace it unnecessarily.

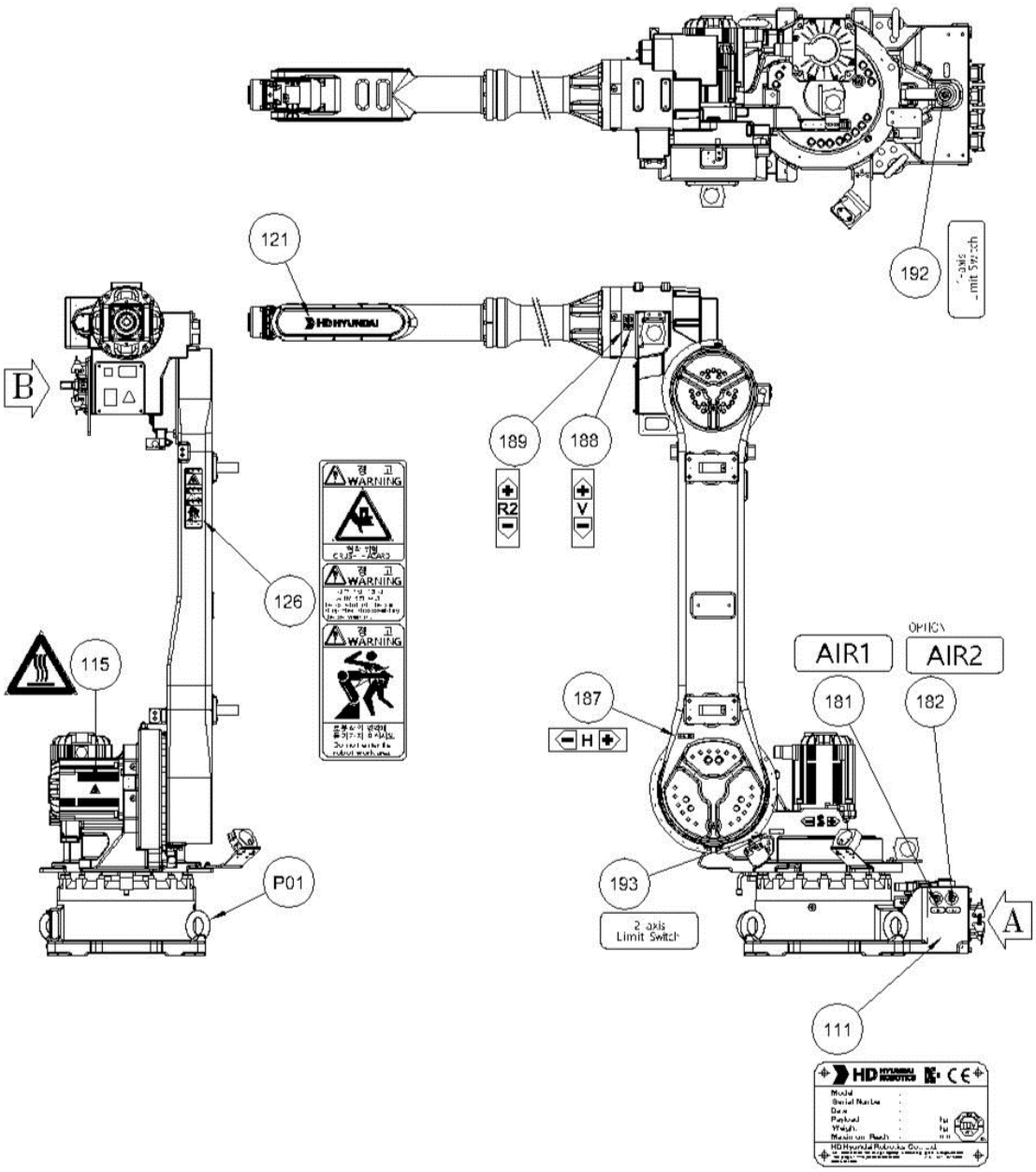

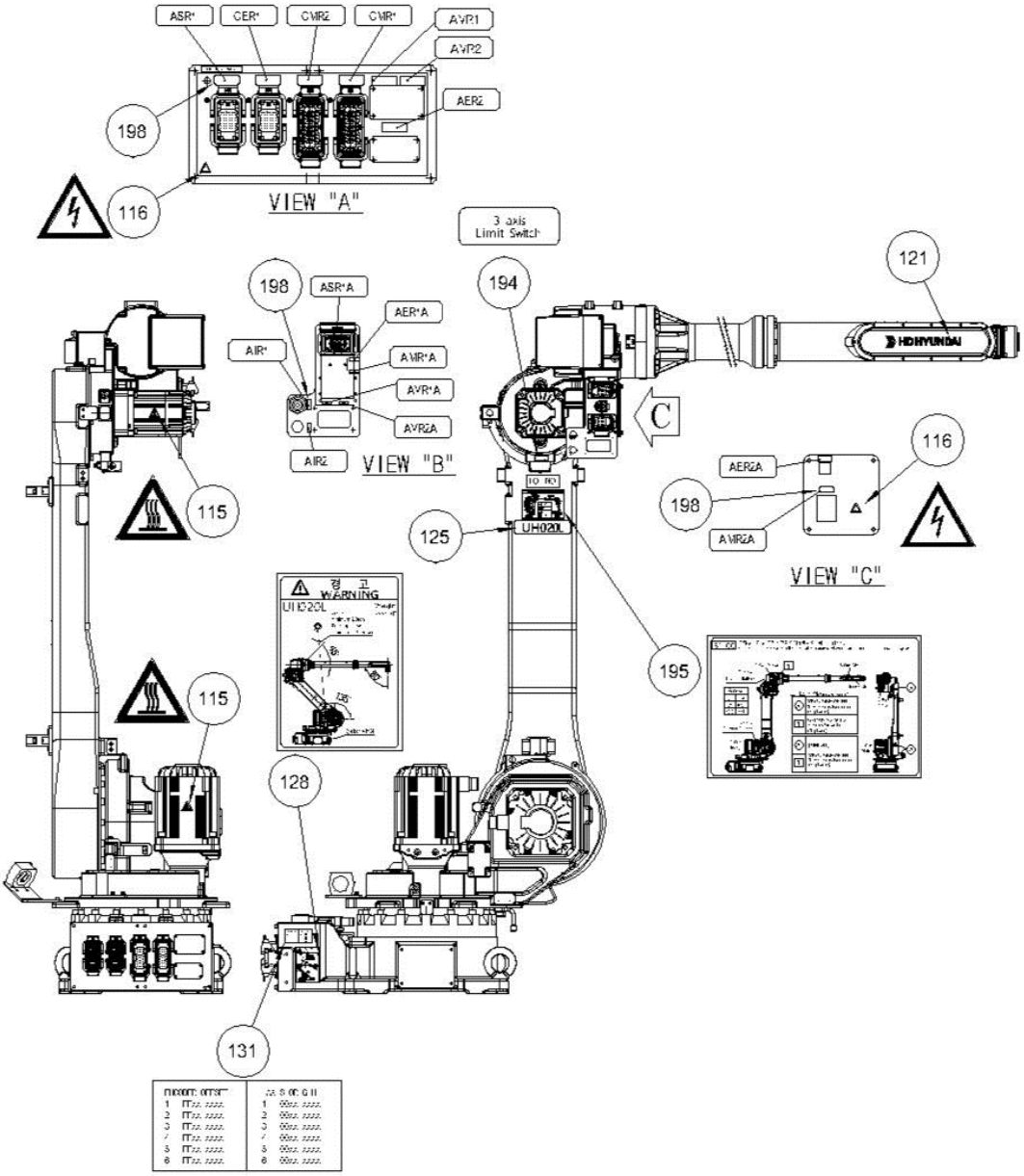

Figure 3.2 Location of Safety Nameplate

3.3. How to Transport

The robot can be transported using a crane and forklift. When moving the robot, put the robot into a posture suitable for each transport situation as shown in the figure below, and transport it using eyebolts and designated transportation equipment.

- You need to move or unload the robot slowly and very carefully.
- When unloading the robot onto a floor, be careful not to cause a strong collision between the bottom installation surface of the robot and the floor surface.
- Never transport the robot by means other than the specified transport equipment and methods.
- When transporting the robot, be very careful not to allow the motors, connectors, cables, etc. of the robot to be damaged by the crane wire or forklift.
- When transporting the robot, make it keep its horizontal level.
- When transporting the robot using a forklift, check the bolts fixing the transport equipment and tighten any loose bolts.

3.3.1. Using Crane

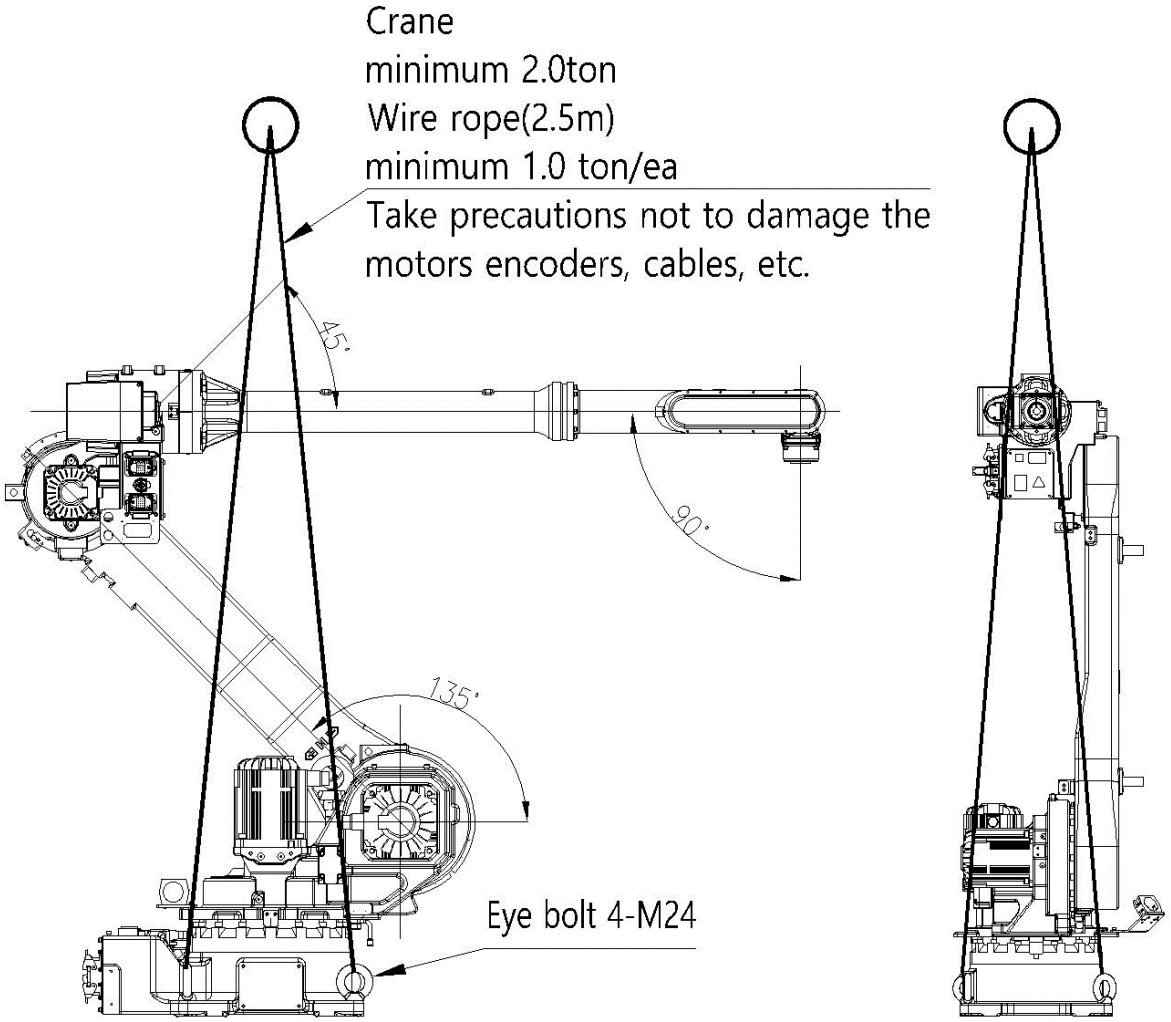

1(S- Axis)	0
2(H- Axis)	135
3(V- Axis)	-45

4(R2- Axis)	0
5(B- Axis)	-90
6(R1- Axis)	0

Figure 3.3 How to Transport: Using crane [HDR20L-32]

The following lifting instructions are valid for a "naked" robot. If additional equipment is put on the robot, the center of gravity may change and make lifting dangerous.

- Never walk under the robot.
- Pose the robot as shown in the Figure.
- Install a 4-M24 eye bolt to the base body.
- Connect a wire rope to the eye bolts.
- Use 4 piece of protective hose(four parts/ 50cm) to prevent damage.
- Keep the safety regulations during Lifting process.
- Weight of manipulator: 536kg(HDR20L-32)
- Minimum crane capacity: 2 tons

3.3.2. Use a Forklift use

A forklift can be used to transport the manipulator.

For safety reasons, please observe the following.

- Make each model take the basic posture by referring to the figure.
- Fix the robot onto a pallet, and insert the forklift fork into the pallet to carry it. The pallet should be strong enough to withstand the weight.
- Carry at a slow speed.
- Follow all safety regulations.

Precautions

- Do not lean against the robot while carrying it.
- Make sure the robot does not collide with the floor while you are loading and unloading it.
- Pay attention to the relevant safety rules while working with the forklift.

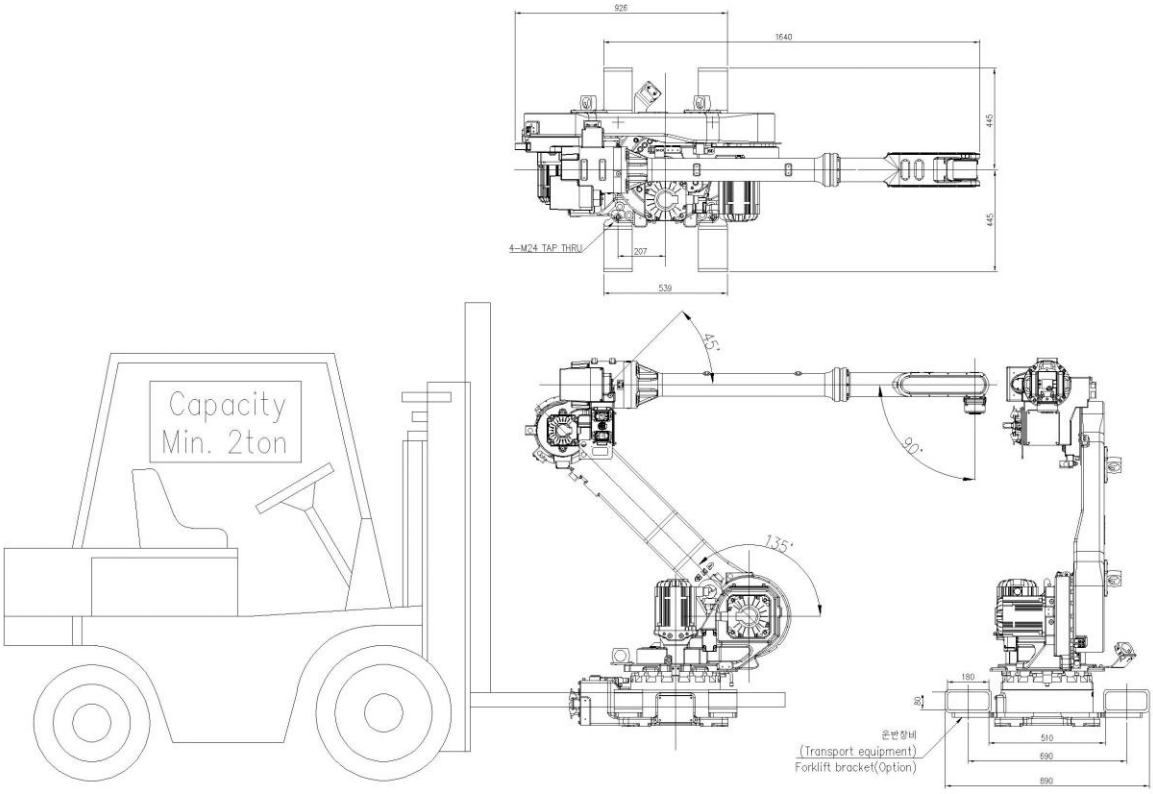

1(S- Axis)	0
2(H- Axis)	135
3(V- Axis)	-45
4(R2- Axis)	0
5(B- Axis)	-90
6(R1- Axis)	0

Figure 3.4 How to Transport: Using forklift [HDR20L-32]

3.4. Storage of the robot

To store the robot without installing it, pose it as shown in [Figure 3.3].

[Caution]
If not placed as instructed, the robot may fall over. For long-term storage, take measures to ensure that it does not fall over.

3.5. Installation Methods

Caution:
Read the safety regulations or related instructions carefully before unpacking and installing the robot.

Warning:
Installation must be performed by an installation expert, and the relevant regulations of the concerned country or region should be observed.

When unpacking the robot, check whether it was damaged during transport or while being unpacked. In addition, because the installation methods and foundation for the manipulator are very important in maintaining the functions of the robot, you should strictly observe the following.

3.5.1. Working Conditions

(1) Ambient temperature should range from 0℃ to 45℃.
(2) Ambient humidity should range from 20% RH to 85% RH, without dew condensation.
(3) Less dust, oil, or moisture
(4) No flammable and corrosive liquid or gas
(5) No large impact and vibration
(6) There should be no large sources of electrical noise nearby.
(7) If the robot is not to be installed right away, it should be stored in a dry place with an ambient temperature of -15℃–40℃.

3.5.2. Installation of the Manipulator

The manipulator should be firmly fixed with four M20 bolts. All four bolts should be used.

- Bolt: M20*70 (Hardness level: 12.9)
- Flat washer: T = 4mm or above, internal diameter (ID) = 24mm, hardness of HrC 35
- Assembly torque: 530±20Nm

The base floor where the robot is to be installed should be designed with hardness so that the dynamic effect to the robot can be minimized.

When installing the robot on the floor, if the thickness of the concrete floor is more than 300 mm, repair irregularities and cracks on the floor, and fix the mounting plate with M20 anchor bolts. If the thickness of the concrete floor is less than 300 mm, construction of an independent foundation will be necessary, so it should be reviewed before construction.

3.5.3. Accuracy of Installation Surface

The degree of flatness for the four attachment plate surfaces should satisfy the specification. Use a shim, if necessary. The rest of the surface must be flat within ±2mm.

- **Cautions**

① The flatness of mounting plate must be within 1.0 mm.
① Make four plane figures of a sealed plate of 1.0 mm (±0.5 mm) or less.

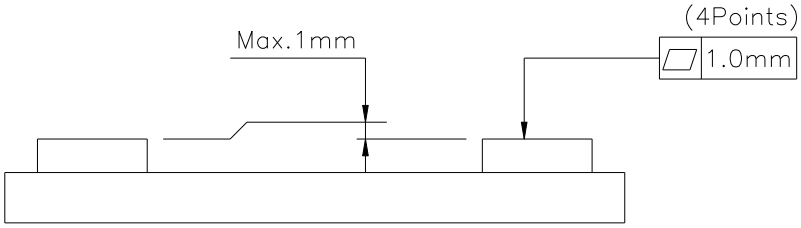

Figure 3.5 Accuracy of Installation surface

3.5.4. Dimension of Installation Surface

Fix the swivel base for robot's installation.
Refer to [Figure 3.6] for the dimension.

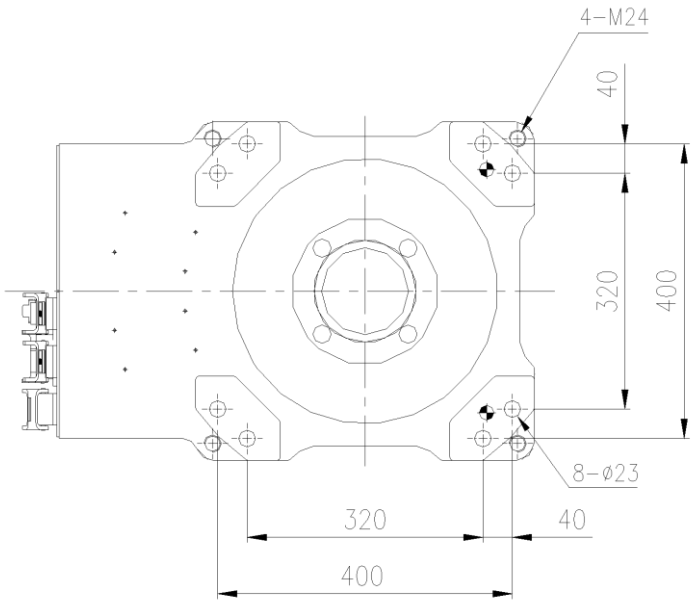

Figure 3.6 Dimension of Robot Installation [HDR20L-32]

3.5.5. Robot Cable Connection

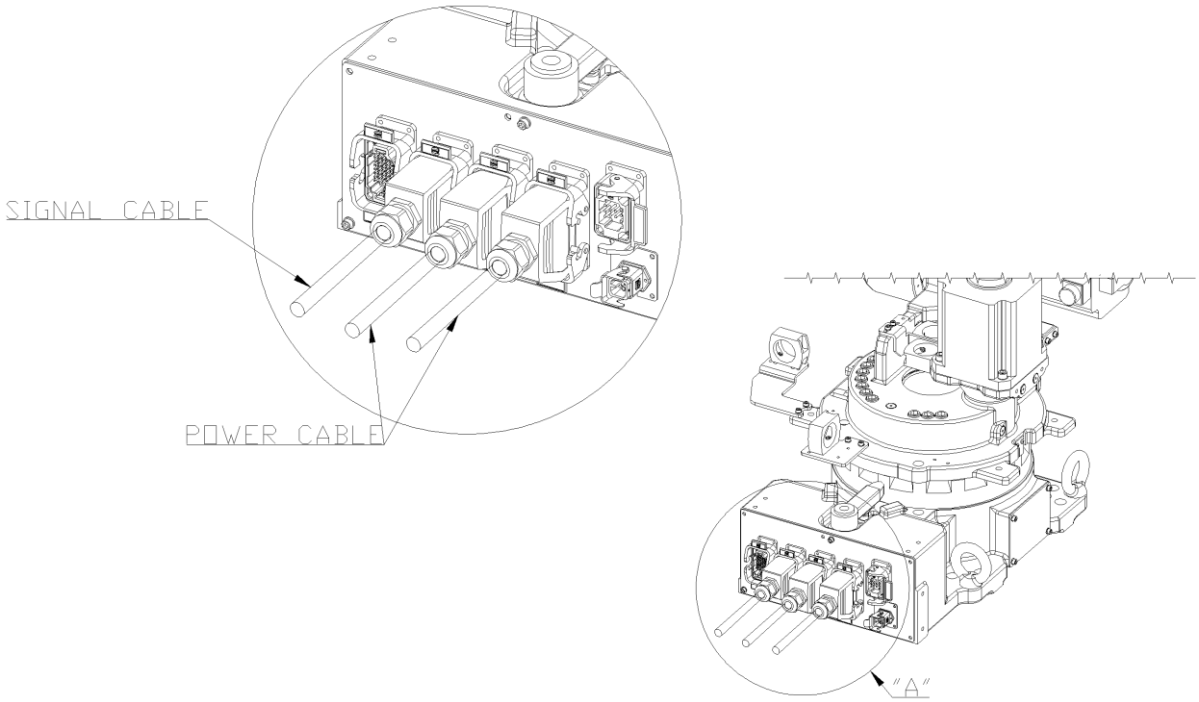

Figure 3.7 Robot Cable Connection

The robot will be connected to the controller with power cables and a signal cable. Connect the cables to the connectors on the rear of the robot base. Connect the ground wire as well.
For the connection of pneumatic pressure cables and option cables, refer to "2.8 Application Wiring and Inspection Wiring Diagram".

Make sure to turn OFF the power of the controller before connecting the cables.

3.5.6. Emergency Stop Time & Distance

The following items are the response time and distance for an emergency stop during the max speed operation of each axis (S, H, and V) with the standard load.

Table 3-1 Emergency Stop Time & Distance

Robot Model		Axis S	Axis H	Axis V
HDR20L-32	Maximum moving distance [mm]	2,551	1,972	2,103
	Maximum time [s]	0.75	0.72	0.80

3.6. Allowable Load of Wrist Axis

3.6.1. Permitted load torque estimation

The load, which will be applied to the mechanical interface of robot's wrist axis, is restricted by allowable weight, allowable load torque and allowable moment of inertia. The direction of coordinate system used to calculate the load torque and inertia moment is the same with the direction of robot base coordinate system.

- Step 1

Calculate the location of the weight center from the B axis rotation center (L_X, L_Y, L_Z)

L_X: Location of weight center in X axis
L_Y: Location of weight center in Y axis
L_Z: Location of weight center in Z axis

- Step 2

Check the location from the center of B and R1 axis to the weight center based on the torque map.

$$L_B = \sqrt{L_X{}^2 + L_Z{}^2}\ ,\ \ L_{R1} = \sqrt{L_Y{}^2 + L_Z{}^2}$$

L_B : Length from B axis rotation center to weight center
L_{R1} : Length from R1 axis rotation center to weight center

- Step 3

Calculate the load torque from the calculated distance.

$T_B = MgL_B \qquad T_{R1} = MgL_{R1}$

T_B: Load torque in the rotational center of axis B
T_{R1}: Load torque in the rotational center of axis R1
M: Mass of load
g: Acceleration of gravity

- Step 4

Check if the load torque calculated in the step 3 is the same with or smaller than the limit value, on the basis of allowed load torque table.

- Note: If the load mass is similar to the mass on the torque curve below, the torque can be alternatively validated by checking if the distance calculated in the step 2 is distributed in the torque curve, instead of the step 3 and 4. If it is in the torque curve, the calculated load torque is smaller than the allowed load torque but if it is out of the torque curve, the calculated load torque is bigger than the allowed load torque.

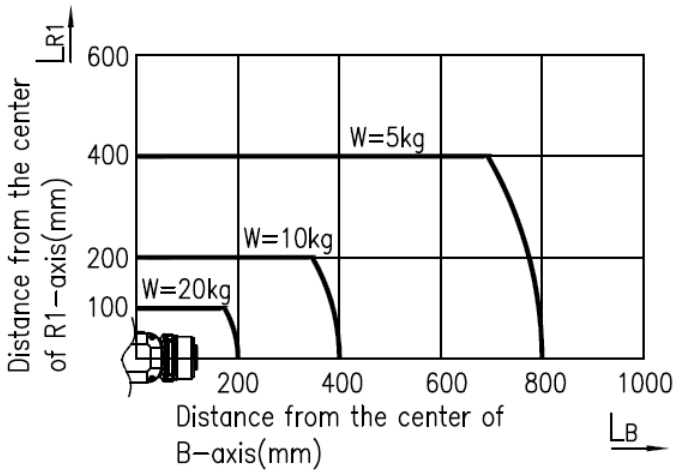

Figure 3.8 Wrist Axis Torque Mapping [HDR20L-32]

Allowable Load Torque

Table 3-2 Allowable Load Torque

Robot Model	Allowable Load Torque		
	R2 Axis Rotation	B Axis Rotation	R1 Axis Rotation
HDR20L-32	Less than 39.2 N·m (4 kgf·m)		Less than 19.6 N·m (2 kgf·m)

3.6.2. Permitted inertia moment estimation

Loads must be kept below maximum conditions shown in [Table 3-1] ~ [Table 3-2]

- Step 1
  Calculate the inertia moment value of the load at each wrist axis center (J_{a4}, J_{a5}, J_{a6})
  J_{a4}- Inertia moment from R2 axis rotation center
  J_{a5}- Inertia moment from B axis rotation center
  J_{a6}- Inertia moment from R1 axis rotation center

- Step 2
  Check if the inertia moment is under the thread according to the permissible inertia moment table.

Allowable Moment of Inertia

Table 3-3 Allowable Moment of Inertia

Robot Model	Allowable Moment of Inertia		
	R2 Axis Rotation	B Axis Rotation	R1 Axis Rotation
HDR20L-32	0.88kgm²(0.088kgfms²)		0.25kgm²(0.025kgfms²)

3.6.3. Example of permitted torque and inertia moment calculation (HS180 Case)

(1) Case #1 Simple 2-D model

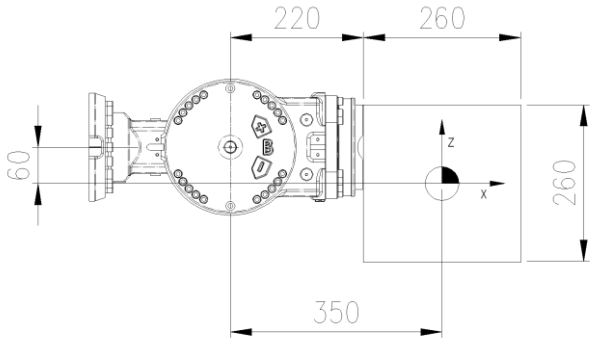

Figure 3.9 2-D load model

M – Load weight
J_{xx} – Inertia moment in X direction from weight center of load
J_{yy} – Inertia moment in Y direction from weight center of load
J_{zz} – Inertia moment in Z direction from weight center of load
J_{a4} - Inertia moment from R2 axis rotation center
J_{a5} - Inertia moment from B axis rotation center
J_{a6} - Inertia moment from R1 axis rotation center

☞ Load condition: Stainless steel with length and width of 260mm and thickness of 260mm (Mass 138.15kg)

① Weight limitation
Load weight: $138.15 \leq 180$ kg

② Permitted torque limit
Location of B axis weight center L_X = 350mm, L_Y = 0mm, L_Z = -60mm
The distance from the axis B and R1 to the center of gravity can be calculated as follows.
B axis based length $L_B = \sqrt{0.35^2 + 0.06^2} = 0.355$ m
R1 axis based length $L_{R1} = 0.06$ m
Load torque of axis B $T_B = MgL_B = 49.04$ kgfm ≤ 110 kgfm
Load torque of axis R1 $T_{R1} = MgL_{R1} = 8.29$ kgfm ≤ 58 kgfm

③ Permitted inertia moment limit
Inertia moment of load from the weight center J_{xx}= 1.56kgm^2, J_{yy}= 1.56 kgm^2, J_{zz}= 1.56 kgm^2
B axis inertia moment (Ja5)
$J_{a5} = ML_B^2 + J_{yy} = 138.15 \times 0.355^2 + 1.56 = 18.97 \leq 106$ kgm^2

R1 axis inertia moment (Ja6)

$J_{a6} = ML_{R1}^2 + J_{xx} = 138.15 \times 0.06^2 + 1.56 = 2.06 \leq 56\ \mathrm{kgm}^2$

④ Conclusion

It is safe because the weight, torque and inertia moment all satisfy the limited condition.

(2) Case #2 Complicated 3-D model

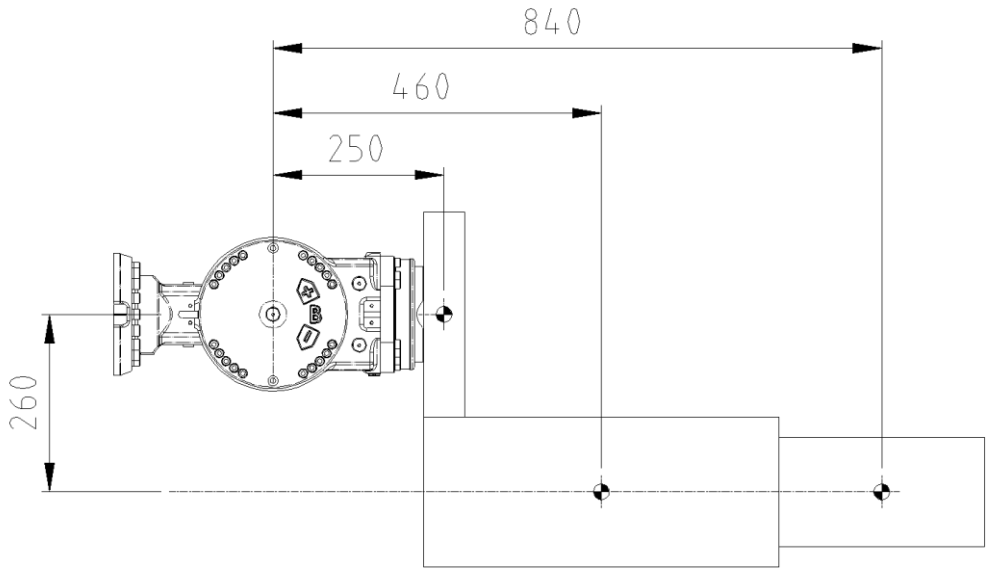

Figure 3.10 3-D load model 2-D shape

Aluminum block shape combination
(σ=0.0027 g/mm^3 : 176.3 kg)
m_1 (60×300×300) 14.6kg
m_2 (480×440×220) 125.4kg
m_3 (280×300×160) 36.3kg

mi – Weight of i block load
L_{Xi} – Weight center location in X axis direction of I block
L_{Yi} - Weight center location in Y axis direction of I block
L_{Zi} - Weight center location in Z axis direction of I block

① Weight limitation
Load weight: $176.3 \leq 180\ \mathrm{kg}$

② Permitted torque limit

You can calculate the weight center location for the total load from the B axis rotation center as follows.

$$L_x = \frac{\sum_i m_i L_{xi}}{\sum_i m_i} = \frac{14.6 \times 250 + 125.4 \times 460 + 36.3 \times 840}{176.3} = 520.85\ \mathrm{mm}$$

$L_y = 0\ \mathrm{mm}$ (Symmetric to Y axis)

$$L_z = \frac{\sum_i m_i L_{zi}}{\sum_i m_i} = \frac{14.6 \times 0 + 125.4 \times 260 + 36.3 \times 260}{176.3} = 238.47\ \mathrm{mm}$$

The weight center location for the total load from the B axis rotation center L_x = 520.85mm, L_y = 0mm, L_z = -238.47mm

Distance from the axis B to center of gravity $L_B = \sqrt{0.521^2 + 0.238^2} = 0.573\ \mathrm{m}$
Distance from the axis R1 to center of gravity $L_{R1} = \sqrt{0.238^2 + 0.0^2} = 0.238\ \mathrm{m}$

Load torque of axis B $T_B = MgL_B = 101.02\ \mathrm{kgfm} \leq 110\ \mathrm{kgfm}$
Load torque of axis R1 $T_{R1} = MgL_{R1} = 41.96\ \mathrm{kgfm} \leq 58\ \mathrm{kgfm}$

x1 y1 z1 – x, y and z direction length of block m1
x2 y2 z2 – x, y and z direction length of block m2
x3 y3 z3 – x, y and z direction length of block m3

L_{X1}, L_{Y1}, L_{Z1} - Weight center location of block m1 from B axis rotation center
L_{X2}, L_{Y2}, L_{Z2} - Weight center location of block m2 from B axis rotation center
L_{X3}, L_{Y3}, L_{Z3} - Weight center location of block m3 from B axis rotation center

Jxx1, Jyy1, Jzz1 – Inertia moment by x, y and z axis from the weight center of block m1
Jxx2, Jyy2, Jzz2 – Inertia moment by x, y and z axis from the weight center of block m2
Jxx3, Jyy3, Jzz3 – Inertia moment by x, y and z axis from the weight center of block m3

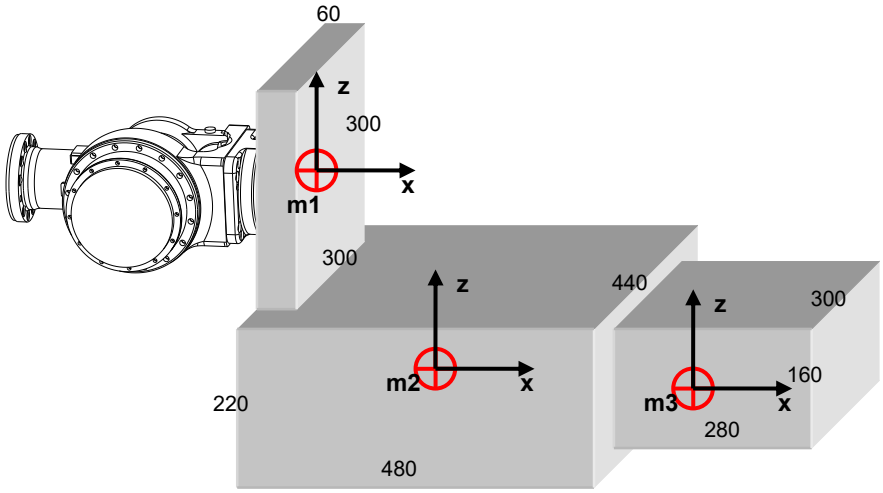

Figure 3.11 3-D load model 3-D shape

③ Permitted inertia moment limit

Table 3-4 Inertia moment from weight center by block

Block weight (kg)	Weight center (L_X, L_Y, L_Z)	J_{xx}	J_{yy}	J_{zz}
m_1 (14.6)	(0.25, 0, 0)	0.219 kgm²	0.114 kgm²	0.114 kgm²
m_2 (125.4)	(0.48, 0, -0.26)	2.530 kgm²	2.915 kgm²	4.433 kgm²
m_3 (36.3)	(0.89, 0, -0.26)	0.350 kgm²	0.314 kgm²	0.509 kgm²

B axis inertia moment (J_{a5})

$$J_{a5} = \sum_i \left[m_i(L_{xi}^2 + L_{zi}^2) + J_{yyi}\right]$$
$$= [14.6 \times (0.25^2) + 0.114] + [125.4 \times (0.46^2 + 0.26^2) + 2.915] + [36.3 \times (0.85^2 + 0.26^2) + 0.314] = 67.95 \leq 106\ \mathrm{kg}m^2$$

R1 axis inertia moment (J_{a6})

$$J_{a6} = \sum_i \left[m_i(L_{yi}^2 + L_{zi}^2) + J_{xxi}\right]$$
$$= [14.6 \times (0^2) + 0.219] + [125.4 \times (0.26^2) + 2.530] + [36.3 \times (0.26^2) + 0.350] = 14.03 \leq 56\ \mathrm{kg}m^2$$

④ Conclusion

It is safe because the weight, torque and inertia moment all satisfy the limited condition.

4

Inspection

This chapter provides the instructions for regular inspection and overhaul necessary for the prolonged lifetime of robot performance.

4.1. Inspection Item and Period

Inspection is positively necessary to continue and maintain the high performance of robot for long-term operation.
There are daily inspection and regular inspection. [Table 4-1] shows basic periods for regular inspections, so inspectors should make an inspection according to the indicated periods.
And overhaul every 35,000 operating hours.

The inspection periods have been reviewed for SPOT Welding. In case of high precision work such as handling, it is recommended to inspect at the half intervals of that period as shown in [Table 4-1].

Table 4-1 Inspection Schedule

Daily Inspection	Daily	MANIPULATOR, MOTOR, REDUCER
Regular Inspection	3months	WIRING, BOLTS, REDUCER
	1 year	LIMIT SWITCH / Dog, Brake

4.2. Inspection Item and Period

Table 4-2 Inspection Items and Periods

No.	Inspection Intervals			Inspection Items	Inspection method	Standards	Remark
	Daily	3 months	1 year				
Robot Manipulator and Axes common							
1	○			Cleaning	Examine dirt and dust with naked eyes		
2		○		Inspection wiring	Examine any cable damages Examine cable fixing bracket tightening bolts paint marking with naked eyes Examine any cable cover damages with naked eyes		
3		○		Main bolts	Examine paint marking with naked eyes		
4			○	Limit Switch/ Dog	Check the ON-OFF function of limit switch	Check if the emergency stop lamp is on when the limit switch is ON.	
5	○			Motor	Check the abnormal heating Check the abnormal sound		
6			○	Brake	Check the ON/OFF operation of brake release switch Note) Turn the switch off in a second because the ARM of working axis may be dropped when the brake release switch is on	When the brake release switch is OFF, ARM of End Effect will not be dropped.	
Axis S, H, V							
7	○			Reduction gear	Check the abnormal sound Check the shaking(vibrating)		

No.	Inspection Intervals			Inspection Items	Inspection method	Standards	Remark
	Daily	3 months	1 year				
Axis R2, B, R1							
8		○		Reduction gear	Check the abnormal sound Check the vibrating		
9		○		End Effect tightening bolts	Examine paint marking with naked eyes		
10		○		Diversion	there is any diversion by rotating each axis to the right and reverse direction	should not feel diversion by touch	

If the robot is utilized in adverse condition(such as spot welding, grinding, etc.), perform the inspection more frequently to ensure proper reliability of the robot system

- Inspect all visible cabling, and replace them if damaged.
- Check the mechanical bumper devices for deformation and damage. If the bumper or Dog is bent, replace it immediately.
- Check the tightening torque of main bolts as shown in [Figure 4.1].
- Check the abnormal noise in an automatic or teaching mode in order to ensure the condition of power transmission (such as motor, reduction gear, etc).

4.3. Inspection of Main External Bolts

The recommended bolt torque is shown in [Figure 4.1].
Apply the appropriate torque, where required, using the torque wrench and place the paint marking where the check-up is completed

Table 4-3 Inspection part for main bolts

No.	Inspection parts	No	Inspection parts
1	H-axis reduction gear seal bolt	5	ADD PIPE seal bolt
2	H-axis motor seal bolt	6	ARM PIPE seal bolt
3	V-axis reduction gear seal bolt	7	For B/R1 axis motor assembly
4	V-axis motor seal bolt	8	For End Effector assembly

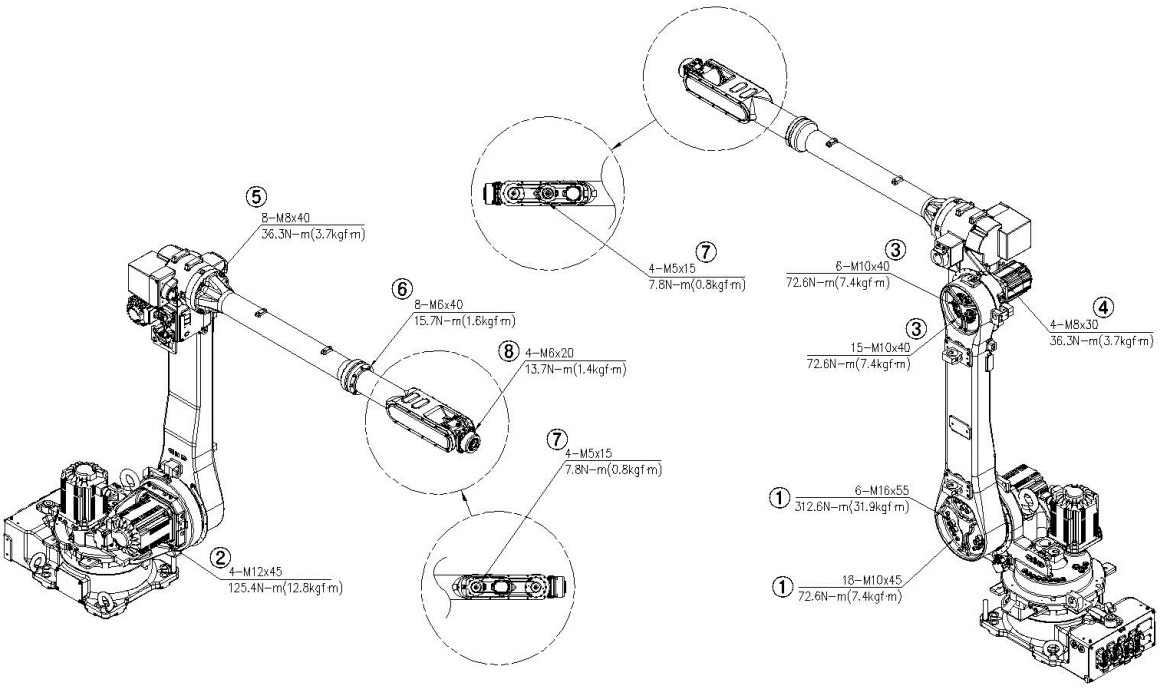

Figure 4.1 Inspection Part for Main Bolts [HDR20L-32]

4.4. Checking the timing belt

Small robot HH series has parts where the timing belt is applied on the operating assembly of the wrist axis.
For the operating assembly of the timing belt, check the tension of the belt after every 1,500 hours and when there is vibration/noise on the belt. If the tension of the timing belt is not appropriate, it may have a severely negative effect on the performance of the robot.

(1) HDR20L-32

- Check the timing belt of R2 axis

① Turn off the power.
② Take off the wrist cover.
③ Press the center of the timing belt with the given force (F) and check the pressed length(δ). If a sonic tension meter is used, measure the frequency(f). (Table 4.4)
④ If the pressed length or frequency is not appropriate, loosen the motor flange bolt slightly.
⑤ Set the tension of the timing belt.
⑥ Tighten the motor flange bolt. (120kgf·cm)
⑦ Assemble the Arm Frame Cover
⑧ Turn on the power.

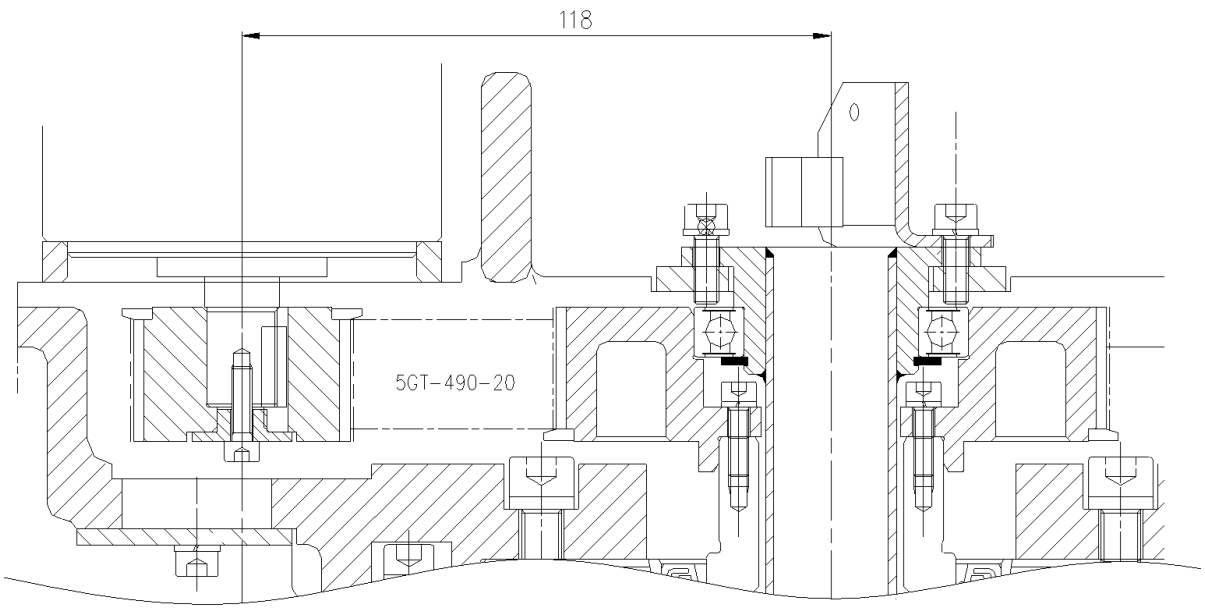

Figure 4.2 Location to check the tension of R2 axis timing belt [HDR20L-32]

■ Check the timing belt of B/R1 axis

① Turn off the power.
② Take off the wrist cover.
③ Press the center of the timing belt with the given force (F) and check the pressed length(δ). If a sonic tension meter is used, measure the frequency(f). (Table 4.4.)
④ Check the pressed length.
⑤ If the pressed length or frequency is not appropriate, loosen the motor flange bolt slightly.
⑥ Set the tension of the timing belt.
⑦ Tighten the motor flange bolt. (75kgf·cm)
⑧ Assemble the wrist cover.
⑨ Turn on the power.

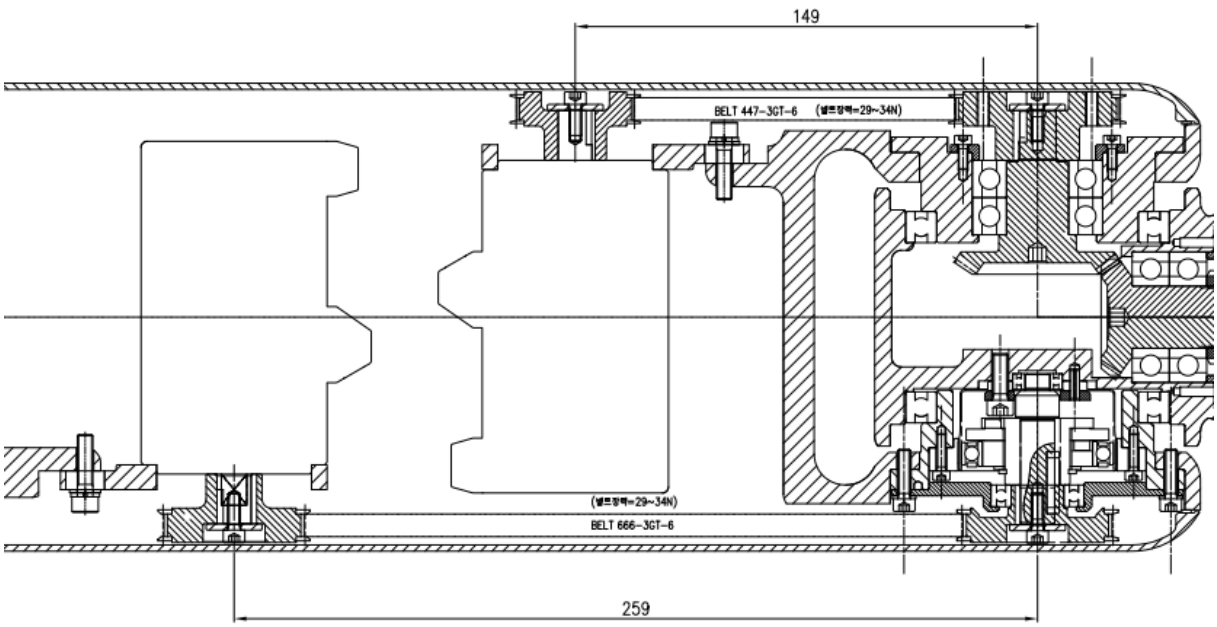

Figure 4.3 Location to check the tension of B axis timing belt [HDR20L-32]

Table 4-4 Standard for Timing Belt tension

Robot Model	HDR20L-32		
	R2 axis	B axis	R1 axis
Tension (T)	120 N	29~34 N	29~34N
Frequency (f)	164 Hz	85~92 Hz	147~160 Hz
Force (F)	9.8 N	1.8 ~ 2.1 N	1.8 ~ 2.1 N
Pressed length (δ)	1.8 mm	4 mm	2.3 mm

5

Maintenance

5.1. Grease Replacement

Attention

If greasing is performed incorrectly, the internal pressure of the grease bath may suddenly increase, possibly causing damage to the seal, which would in turn lead to grease leakage and abnormal operation. When performing greasing, therefore, observe the following cautions.

(1) Before starting to grease, remove the plug from the grease outlet.

(2) Whenever possible, avoid using a compressed-air pump, powered by the factory air supply. If the use of a compressed-air pump is unavoidable, restrict the greasing pressure less than 2.0bar(2.04kgf/cm^2).

(3) Use grease only of the specified type. If not, may damage the reduction gear or lead to other problems.

(4) After greasing, confirm that no grease is leaking from the grease outlet and that the grease bath is not pressurized, then re-attach the plug in the grease outlet.

(5) To prevent accidents caused by slipping, completely remove any excess grease from the floor or robot.

(6) Degradation of grease should be examined when used in such conditions in case the grease is polluted or if the ambient temperature is above 40℃. Depending on the degradation, the grease exchange cycle may have to be reduced to from six months to one year.

■ Periodic Replacement

Replacement cycle

✓ Grease Replacement : 12,000 hours

If there is still noise in the reducer even after using specified grease, check the state closely for 1-2 days during operation. Generally, the noise will go away.
(The noise will go away if you run the axis at a high speed for 5-10 minutes).

The noise may be caused by following reasons.

1. Operation after greasing or replacing the reducer
2. Operation after long-term storage
3. Operation at a low speed
4. Operation at a low temperature

■ Rate of the grease injection amount based on VIGO GREASE

	VIGO GREASE RE0	RV GREASE LB00	REMARKS
Specific gravity (25°C)	0.9g/㎤	0.87g/㎤	
Rate of the grease injection amount	100%	96.7%	

- VIGO GREASE RE0, EUREKA 114 No.0 → RV GREASE LB00

■ Rate of the grease injection amount based on EUREKA

	VIGO GREASE RE0	RV GREASE LB00	REMARKS
Specific gravity (25°C)	0.9g/㎤	0.87g/㎤	
Rate of the grease injection amount	100%	96.7%	

- EUREKA 114 No.0 → RV GREASE LB00
- Please avoid using EUREKA grease. When the use of EUREKA grease is necessary, please contact us.

5.1.1. S-Axis Reduction Gear

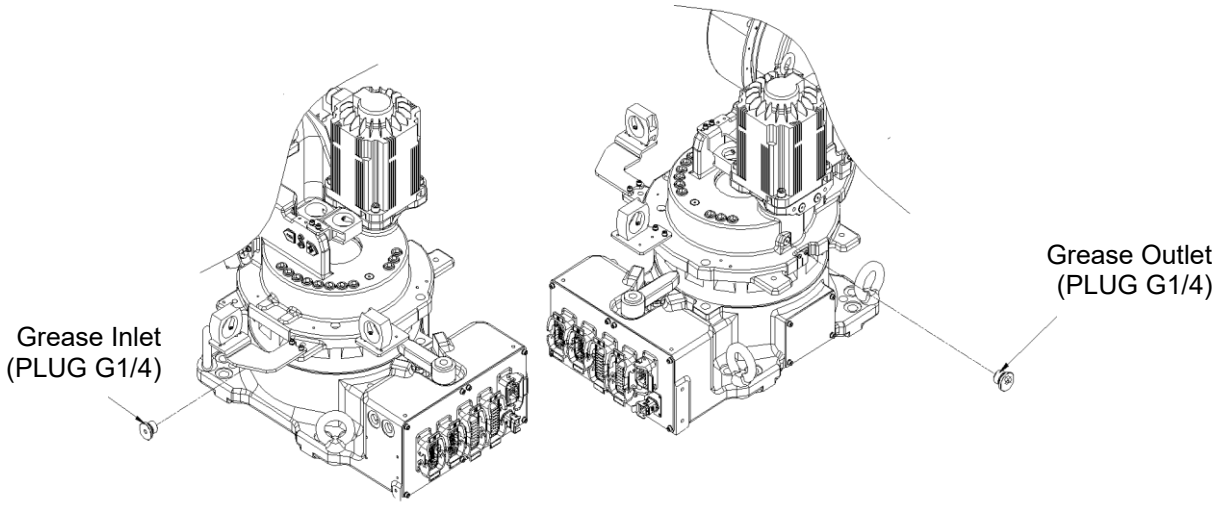

Attention
If grease is added without removing the outlet plug, it cause damage to the seal of reduction gear and grease will go inside the motor and may damage it. It is absolutely necessary to remove the plug.

■ Grease Replacement

(1) Remove the AIR VENT plug to discharge the pressure inside and close it again.
(Warning: Grease may splash because of the pressure inside. Always wear protective goggles.)

(2) Remove the grease outlet plug.

(3) Remove the grease inlet plug.

(4) Use a grease gun to slowly inject the grease through the inlet.

✓ **Grease type : VIGO GREASE RE0** ✓ **Amount of grease: 2,755cc(2,480g)**	✓ **Grease type : RV GREASE LB00** ✓ **Amount of grease: 2,755cc(2,397g)**

(5) Move the S-Axis for a few minutes to eject the old grease and then add grease until the new grease appears in the outlet port. The new grease can be distinguished from the old one by color.

(6) Clean the grease inlet with a cloth and assemble the inlet plug similar to the initial state.

(7) Discharge the excessively injected grease.

① Attach a plastic bag to the grease outlet.
② With S-axis in ±45° position, carry out a test drive for 1.5 hours at 50% speed.
③ Remove the plastic bag.

(8) Clean any grease around the outlet and close the outlet plug.

5.1.2. H-Axis Reduction Gear

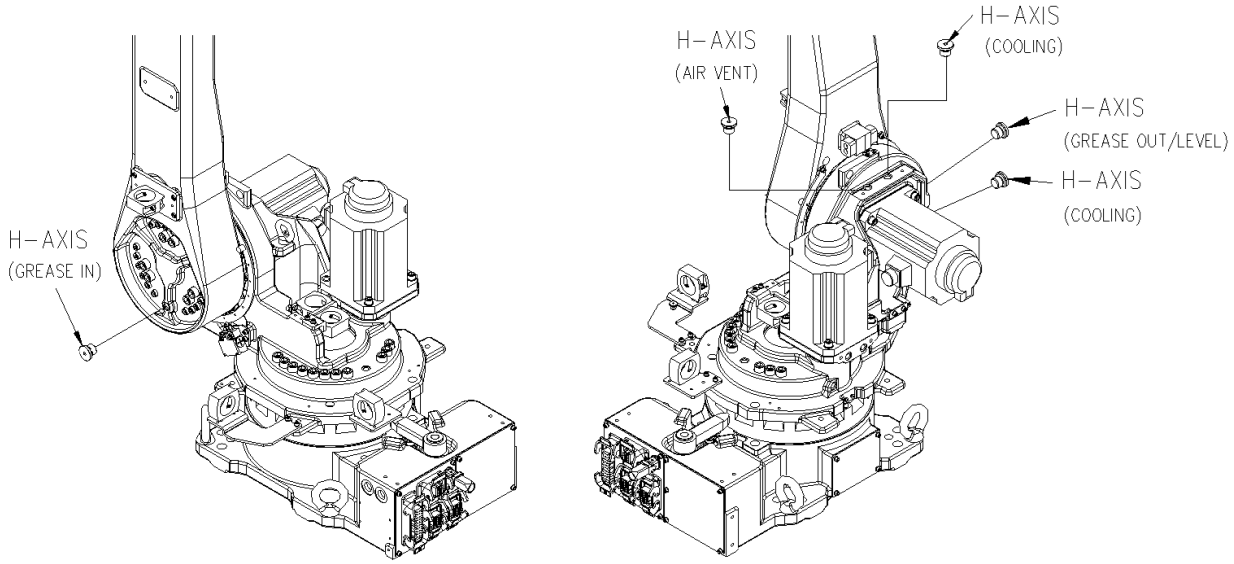

Attention

If grease is added without removing the outlet plug, it cause damage to the seal of reduction gear and grease will go inside the motor and may damage it. It is absolutely necessary to remove the plug.

■ **Grease Replacement**

(1) Make the H-Axis Arm vertical for ground. (H:90°-Floor Type, H:0° -Shelf Type)

(2) Remove the AIR VENT plug to discharge the pressure inside and close it again.
(Warning: Grease may splash because of the pressure inside. Always wear protective goggles.)

(3) Remove the grease outlet plug.

(4) Remove the grease inlet plug.

(5) Use a grease gun to slowly inject the grease through the inlet.

- ✓ **Grease type : VIGO GREASE RE0**
- ✓ **Amount of grease : 1,600cc(1,440g)**

- ✓ **Grease type : RV GREASE LB00**
- ✓ **Amount of grease : 1,600cc(1,392g)**

(6) Move the H-Axis for a few minutes to eject the old grease and then add grease until the new grease appears in the outlet port. The new grease can be distinguished from the old one by color.

(7) Clean the grease inlet with a cloth and assemble the inlet plug similar to the initial state.

(8) Discharge the excessively injected grease.

① Attach a plastic bag to the grease outlet.
② With S-axis in ±45° position, carry out a test drive for 1.5 hours at 50% speed.
③ Remove the plastic bag.

(9) Clean any grease around the outlet and close the outlet plug.

5.1.3. V-Axis Reduction Gear

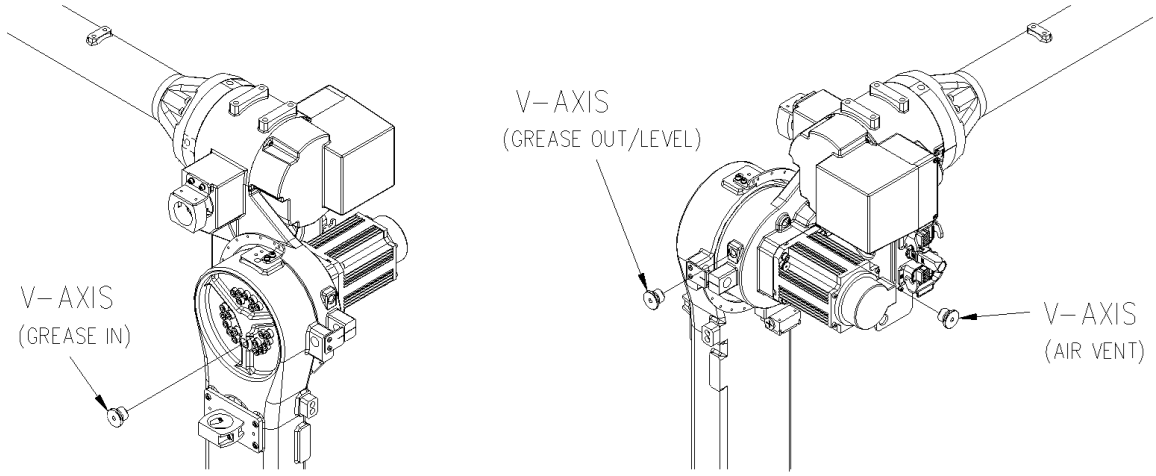

Attention

If grease is added without removing the outlet plug, it cause damage to the seal of reduction gear and grease will go inside the motor and may damage it. It is absolutely necessary to remove the plug.

■ **Grease Replacement**

(1) Make the V-Axis Arm horizontal for ground. (V:0°-Floor Type, V:-90°-Shelf Type)

(2) Remove the AIR VENT plug to discharge the pressure inside and close it again. (Warning: Grease may splash because of the pressure inside. Always wear protective goggles.)

(3) Remove the grease outlet plug.

(4) Remove the grease inlet plug.

(5) Use a grease gun to slowly inject the grease through the inlet.

✓ **Grease type : VIGO GREASE RE0** ✓ **Amount of grease : 711cc(640g)**	✓ **Grease type : RV GREASE LB00** ✓ **Amount of grease : 711cc(619g)**

(6) Move the V-Axis for a few minutes to eject the old grease and then add grease until the new grease appears in the outlet port. The new grease can be distinguished from the old one by color.

(7) Clean the grease inlet with a cloth and assemble the inlet plug similar to the initial state.

Discharge the excessively injected grease.

① Attach a plastic bag to the grease outlet.
② With S-axis in ±45° position, carry out a test drive for 1.5 hours at 50% speed.
③ Remove the plastic bag.

(8) Clean any grease around the outlet and close the outlet plug.

5.1.4. R2-Axis Reduction Gear

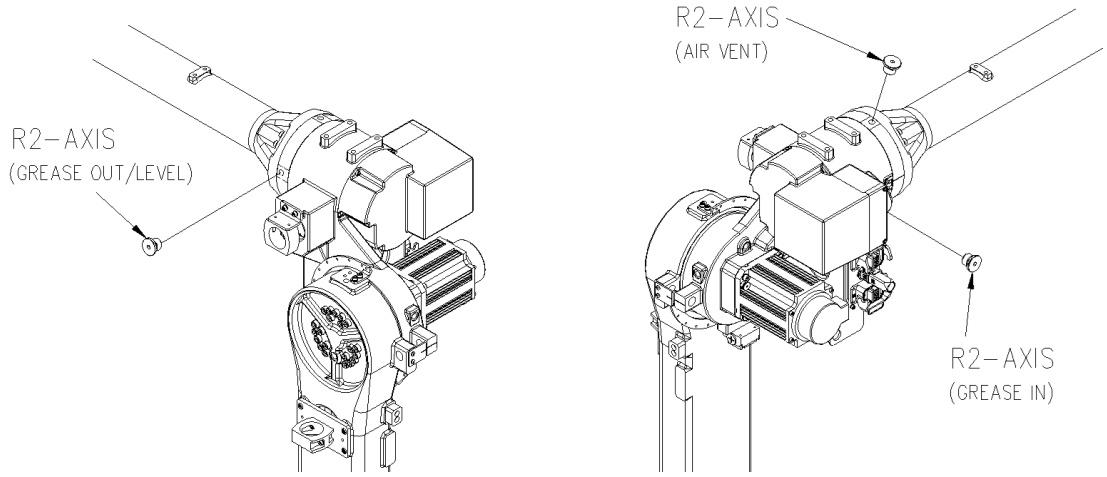

Attention

If grease is added without removing the outlet plug, it cause damage to the seal of reduction gear and grease will go inside the motor and may damage it. It is absolutely necessary to remove the plug.

■ **Grease Replacement**

(1) Remove the AIR VENT plug to discharge the pressure inside and close it again. (Warning: Grease may splash because of the pressure inside. Always wear protective goggles.)

(2) Remove the grease outlet plug.

(3) Remove the grease inlet plug.

(4) Use a grease gun to slowly inject the grease through the inlet.

✓ **Grease type : VIGO GREASE RE0** ✓ **Amount of grease : 189cc(170g)**	✓ **Grease type : RV GREASE LB00** ✓ **Amount of grease : 189cc(164g)**

(5) Move the R2-Axis for a few minutes to eject the old grease and then add grease until the new grease appears in the outlet port.

(6) Clean the grease inlet with a cloth and assemble the inlet plug similar to the initial state.

(7) Discharge the excessively injected grease.

① Attach a plastic bag to the grease outlet.
② With S-axis in ±45° position, carry out a test drive for 1.5 hours at 50% speed.
③ Remove the plastic bag.

(8) Clean any grease around the outlet and close the outlet plug.

5.1.5. B/R1 - Reducer

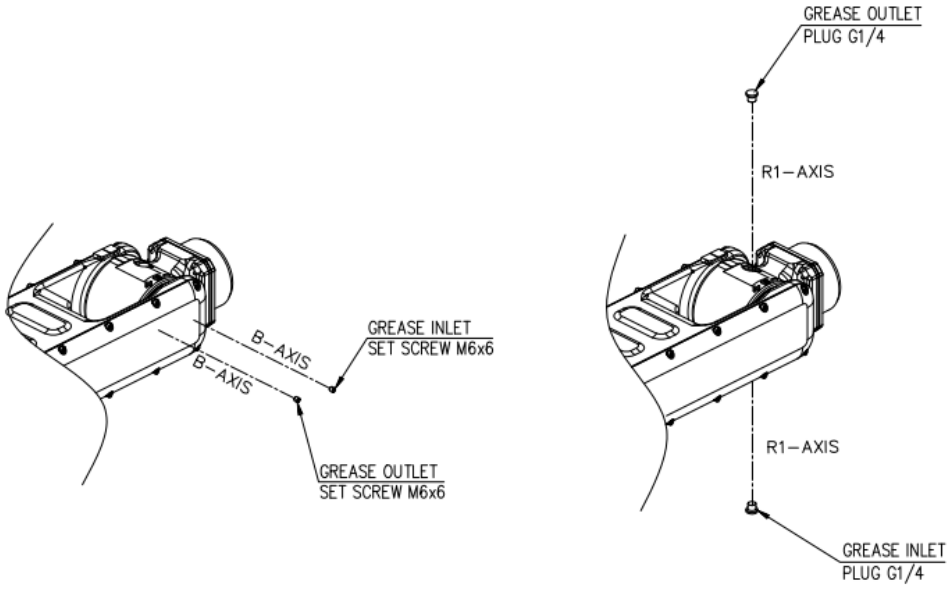

- **Grease Replenishment (B axis)**

(1) Prepare a grease nipple (A-M6F) and then make the R2-Axis 0°degree.

(2) Remove the outlet plug of inside cover and assemble the grease inlet nipple.

(3) Inject the grease into the grease inlet using a grease gun.

(4) Wipe the outlet port with a cloth and attach the plug with seal tape.

> ✓ Type of grease : SK-1A
> ✓ Amount of grease : 3cc

- **Grease Replenishment (R1 axis)**

(1) Inject the grease into the grease inlet using a grease gun.

(2) Wipe the outlet port with a cloth.

> ✓ Type of grease : SK-1A
> ✓ Amount of grease : 3cc

5.2. Battery Replacement

The position data of each axis is preserved by the backup batteries. The batteries need to be replaced every two years. To replace batteries observe the following procedure.

(1) Keep the power on. Press the Emergency Stop button to prohibit the robot motion.

<u>Attention</u>

Replacing the batteries with the power supply turned off causes all current position data to be lost. Therefore, zeroing will be required again.

(2) Detach the battery cover.

(3) Take out the old batteries from the battery cover.

(4) Insert new batteries into it. Pay attention to the direction of batteries.

- ✓ Battery Spec.: ER6C(AA) 3.6V
- ✓ Manufacturer : Maxell

(5) Reinstall the battery cover.

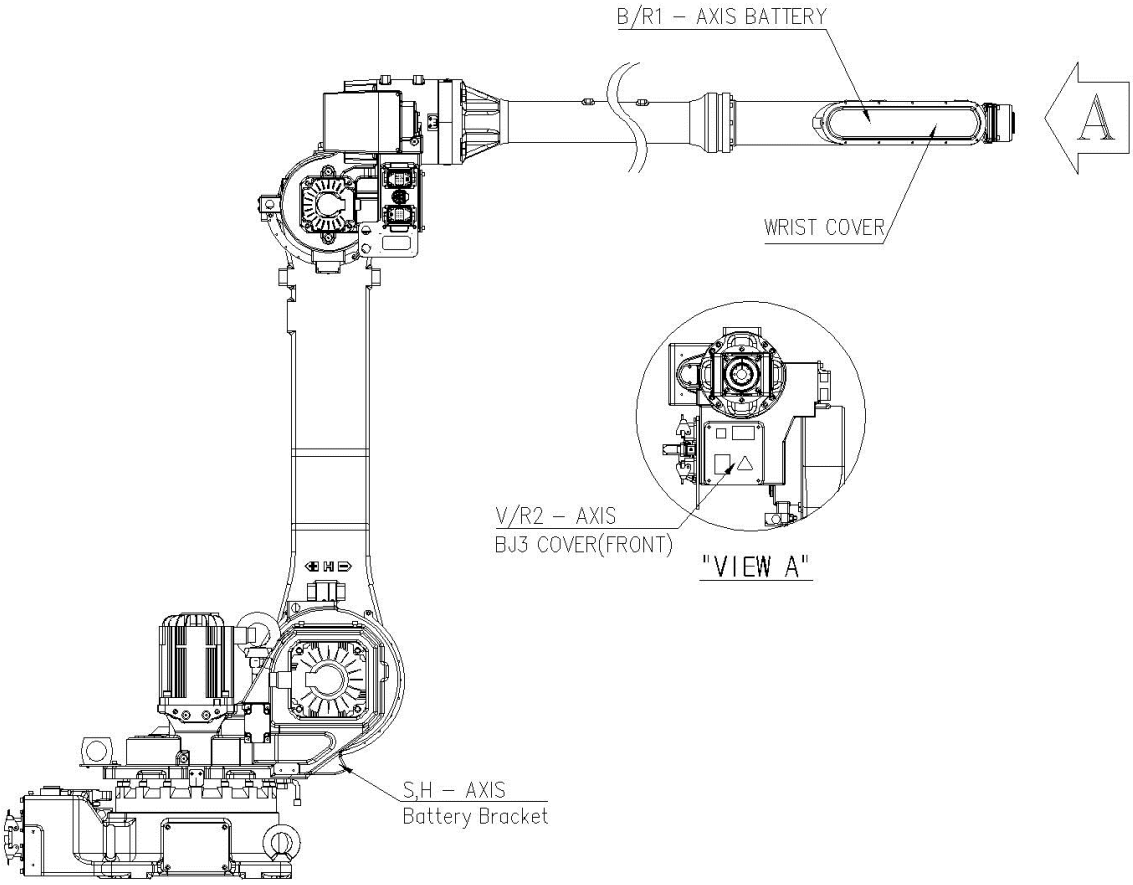

Figure 5.1 Location of Battery Replacement

Attention

- ✓ Do not dispose the batteries. Dispose of the battery with industrial waste according to the laws and other rules in the country where the controller is installed.
- ✓ Do not recharge the batteries, otherwise batteries may result in exploding or overheating.
- ✓ Do not use any batteries other than the recommended one.
- ✓ Change the batteries only with the specified one.

5.2.1. Instructions for Battery Storage

(1) Do not keep the batteries at a high temperature and humidity. Keep it in the well-ventilating place without dew condensation.

(2) Keep it in a normal temperature, at relatively constant temperature(20±15℃) and at relative humidity of less than 70%.

(3) Check the battery storage every six months, and manage them with first-in-first-out.

5.3. Internal Wiring

Replacement cycle of internal wiring depends on follows.

- Continuous operation
- Operating speed
- Atmosphere/environment

Inspect on a regular basis, every three months and check any damage on the cables or cable protect spring. If any damage, replace it.

Replace the cable every 16,000 operating hours regardless of working condition.

<u>Attention</u>

- ✓ As all the wires are flexible type, do not use any wires other than specified one.
- ✓ Wiring replacement must be done by unit.
- ✓ Do not use any Cable, protective spring, and Hose that have external damage as they may cause future problems.
- ✓ When purchasing robot cables, make inquiry of our service office about wiring type.

6

Troubleshooting

6.1. Troubleshooting Procedure

If a failure occurs during robot's operation, but it does not stem from the controller, it must be caused by damage on machine parts. The way to troubleshoot as quick and easy as possible should be to diagnose the problem. In addition, it is necessary to determine which parts cause the problem.

(1) Step 1 : Which axis occurs the problem?
First of all, check which axis causes the malfunction. In case that it is hard to detect the problem, check the following possible mechanical defaults.

- Is there any parts making noise?
- Is there any parts generating an overheating?
- Is there any parts have a play or backlash?

(2) Step 2 : Which parts have been damaged?
If the abnormal axes are determined, investigate which parts cause trouble. There could be many causes for one phenomenon. Refer to [Table 6-1] for the cause and phenomenon of the trouble.

(3) Step 3 : Dealing with malfunction parts
If the malfunction parts are confirmed, conduct relevant repair procedure based on the chapter 『6.3 Diagnostics and Resolutions for Major Parts Failure』. Contact our service office if you have any difficulties in dealing with problems.

6.2. Trouble Symptoms and Possible Causes

As shown in [Table 6-1], there may be many parts as the cause of one phenomenon.
Refer to next page to determine which part is malfunction.

Table 6-1 Trouble phenomenon and cause

Defect parts / Trouble phenomenon	Reduction gear	Brake	Motor	Encoder	Backlash	Grease
Overload [Note 1]	○	○	○			
Displacement	○		○	○		
Abnormal sound occurrence	○	○	○			○ [Note 5]
Noise in operation [Note 2]			○		○	
Staggering at stop [Note 3]			○	○		
Irregular twitching [Note 4]			○	○		
Abnormal deviation			○	○		
Free fall of an axis	○	○				
Overheating	○	○	○	○		○
Incorrect action and out of control movement			○	○		

[Note 1] Overloaded ---------- A phenomenon that occurs when a load exceeding the conditions of the rated specification of the motor is applied.
Specifically, it occurs when the temperature relay or circuit breaker is cut off.
[Note 2] Vibration during operation ------- Vibration that occurs during operation
[Note 3] Shaking when stopped ------- A phenomenon in which rocking occurs repeatedly around the stop position when stopped.
[Note 4] Irregular cycle (pulsation) - A phenomenon in which a predetermined cycle is not maintained and vibration occurs in a holding posture
[Note 5] If there are noises coming from the greased part of the reducer during low-speed operation, operate the robot while checking the state closely for 1–2 days. Generally, the noise will go away.
(The noise will go away if you run the axis at high speed for 5–10 minutes)

The noise may be caused by following reasons.

1. Operation after greasing or replacing the reducer
2. Operation after long-term storage
3. Operation at a low speed
4. Operation at a low temperature

6.3. Diagnostics and Resolutions for Major Parts Failure

6.3.1. Reduction Gear

Vibration and abnormal sound will be occurred when a reduction gear is damaged. In this case, it causes overload and abnormal deviation disturbing normal operation. Sometimes overheating may result. The robot may also become completely immovable, or a position offset error may occur.

[Main Axes (S, H, V)]
When turning [ON][OFF] the brake release switch of axis H and axis V, be sure to take necessary precautions to prevent the ARM from dropping, and then switch the brake release [ON][OFF].

- **Diagnostics**

① Check out any vibration, abnormal sound or overheating of the reduction gear when the robot is in operation.
② Check out any play and abrasion in the reduction gear. And check if any abnormality is felt by hand when shaking 1st ARM back and forth with the brake release switch of axis S [ON].
③ Check if peripheral equipment has been contacted with the robot before the abnormality.
(Damage may occur to the reduction gear due to the contacting impact.)

- **Resolution**

Replace the reduction gear. A chain block is needed to lift and hang the robot ARM. Contact our service office for any difficulties.

[Wrist Axes (R2, B, R1)]
When turning [ON][OFF] the brake release switch, be sure to take necessary precautions to prevent the ARM from dropping, and then switch the brake release [ON][OFF].

- **Diagnostics**

① Check out any vibration, abnormal sound, or overheating of the reduction gear when the robot is in operation.
② Check out any play in the reduction gear by shaking the End Effector (such as spot gun and hand devices, etc.) back and forth.
③ Turn motors off, with the brake release switch [ON], and check that the axis can be rotated by hand. If not, the reduction gear is in bad condition.
④ Check if peripheral equipment has been contacted with the robot before the abnormality.
(Damage may occur to the reduction gear due to the contacting impact)

■ Resolution

① Replace the reduction gear.
② Replace the entire wrist section.
(The replacement of entire wrist should be a quick and reliable resolution as it takes time and necessary equipment for reduction gear replacement)

6.3.2. Brake

In case of brakes failure, each axis possibly drops with the motors [OFF]. Or, in reverse, brakes possibly operate even with the motors [ON]. The latter causes overload and noise.

⚠ When intending to operate the entire robot without the motors [ON], operate it with the brake release switch [ON]. Before turning the switch [ON], take necessary precautions to prevent the ARM from dropping as the robot ARM will drop by gravity.

- **Diagnostics**

  Check if the brake can be heard in operation, by turning the brake release switch [ON] [OFF] alternately with the motors [OFF]. If not heard, the brake cable may be broken. (When operating the brake release switch [ON] [OFF], be careful of ARM dropping. The brake release switch is located on the panel in the controller cabinet door.)

- **Resolution**

  If cables turn out to be good condition, replace the motor.

6.3.3. Motor

Motor failure causes abnormal operation of robot such as staggering at stop, irregular twitching and noise in operation. Besides, It may cause overheating and abnormal sound.

Check the reduction gear and fulcrum bearing as well in order to determine which part causes the abnormality. It is because that similar phenomenon is observed when the reduction gear is damaged.

- **Diagnostics**

  Check for overheating and abnormal sound. .

- **Resolution**

  Replace the motor.

6.3.4. Encoder

Position offset, malfunction, and out of control movement as well as staggering at stop, irregular twitching may occur when the Encoder is in bad condition. This case has nothing to do with such phenomena as mechanical abnormal sound, overheating, and vibration

- **Diagnostics**

① Check for any encoder data failure.
② Use reference pins and blocks to check the positional data is correct at pin position.
③ Check for any irregular variations in the encoder data when moving each robot axis.
④ Replace the servo amp board, BD542 to check errors.

- **Resolution**

① If cabling turns out to be in good condition without any damage, replace the encoder.
② If there is no error after replacing the servo amp board BD542, replace the servo amp board.

6.4. Motor Replacement

Warning

When motor is separated, the ARM will drop due to its built-in brakes inside the motor for holding robot's posture. To prevent this drop, please make sure safety measures, such as suspending the arm with devices like a crane, etc., or fixing the 1st arm and the 2nd arm with fixing pins, are employed.

In case of contacting the motor right after it stops, ensure the motor temperature. Motor weights are listed as follows. Be careful when dealing with the motor.

Axis	S	H	V	R2	B	R1
Weight(kg)	23.9	23.9	9.5	3.1	1.3	1.3

Warning

In this work, there is a part performed with the motor [ON]. Therefore, perform the work in pairs. An observer must always be ready to activate an emergency stop. The other performs the work quickly and carefully. An escape route should be determined before starting work.

6.4.1. Necessary Tools and Parts

Table 6-2 Necessary Tools

Tool Name	Axis Name	Part No.(Model)	Remark
Torque wrench (prepared by user)	S, H, V	M12 Torque wrench(Long type)	Use torque wrench and extension on the market
	R2, B, R1	M6 Torque wrench (Long type) M5 Torque wrench (Long type) M4 Torque wrench (Long type)	

Table 6-3 Tightening Torque

	Tightening Torque (kg·cm)		
	Normal	Motor	AC4C-T3
M4	41	37	29
M5	83	75	60
M6	141	120	102
M12	1180	940	857

Table 6-4 Necessary Parts

Part Name	Axis Name	Use or not	Part No.(Model)
Dropping preventive bolt (optional)	Axis H	○	M20×250(Standard)
	Wrist (R2, B, R1)	-	-

(When overhauling the robot, a leveling bulb can be used to focus on the precise starting point. To focus on the precise starting point, please contact us.)

6.4.2. How to Replace Motor

(1) Put the controller into TEACH mode and select motors [ON]. When the motors [On] state cannot be obtained, check the respective ARM is firmly fixed while supporting it to prevent dropping. And then begin at step No.4.

(2) The axis requiring motor replacement takes basic posture.

(3) In case of main axes(S, H, V): Refer to [Figure 6.1] ~ [Figure 6.3].
In case of H axes, Insert a supporting bolt to prevent ARM dropping.
In case of wrist axes (R2, B, R1): Set the origin by using SCALES.

(4) Turn the main power [OFF] with the controller power [OFF].

(5) Disconnect the connector from the motor.

(6) Remove attachment bolts of motor and pull the motor out of robot. When removing motors of axis H or V, be sure not to damage the lip of oil seal due to the gear attached to the axis of motor.

(7) Detach the gear from the motor shaft. not give excessive impact to the motor shaft.

(8) Assemble the gear after lightly applying grease to the shaft.
The bolt used to attach the gear to the shaft should be cleaned and removed of grease before using. Apply Loctite 243 to the screw part of the bolt, and then tighten it using a torque wrench in a regular torque. Besides, slowly tighten the bolt in a symmetrical order.

(9) Assemble the motor on the robot after applying a small amount of grease to the lip of oil seal and applying a moderate amount of grease to the teeth of gear. When assembly the main axis motor, be sure not to damage the lip of oil seal.

(10) Connect the connector to the motor.

(11) When replacing the axis H or V, replenish the grease as the amount as it lost.

(12) Reset the encoder of the axis whose motor is replaced.

Warning

Before encoder correction, check motor connections, with motors [ON], while pressing the Enable switch for 2~3 seconds.

(13) Perform the encoder calibration about the axis whose motor is replaced. Refer to the chapter [Encoder Calibration] in the controller operating manual.

(14) Remove M20 bolt, a supporting bolt for preventing possible dropping of axis H.

(15) Confirm that there is no error in robot's motion.

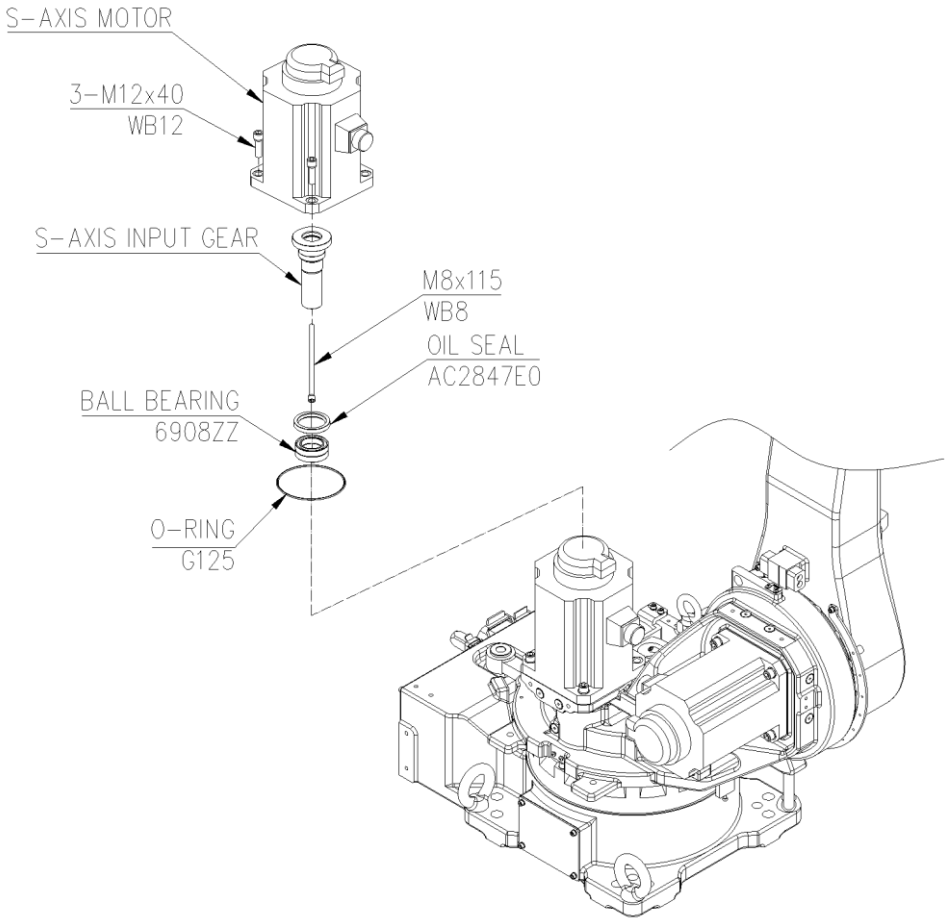

Figure 6.1 Axis S motor assembly

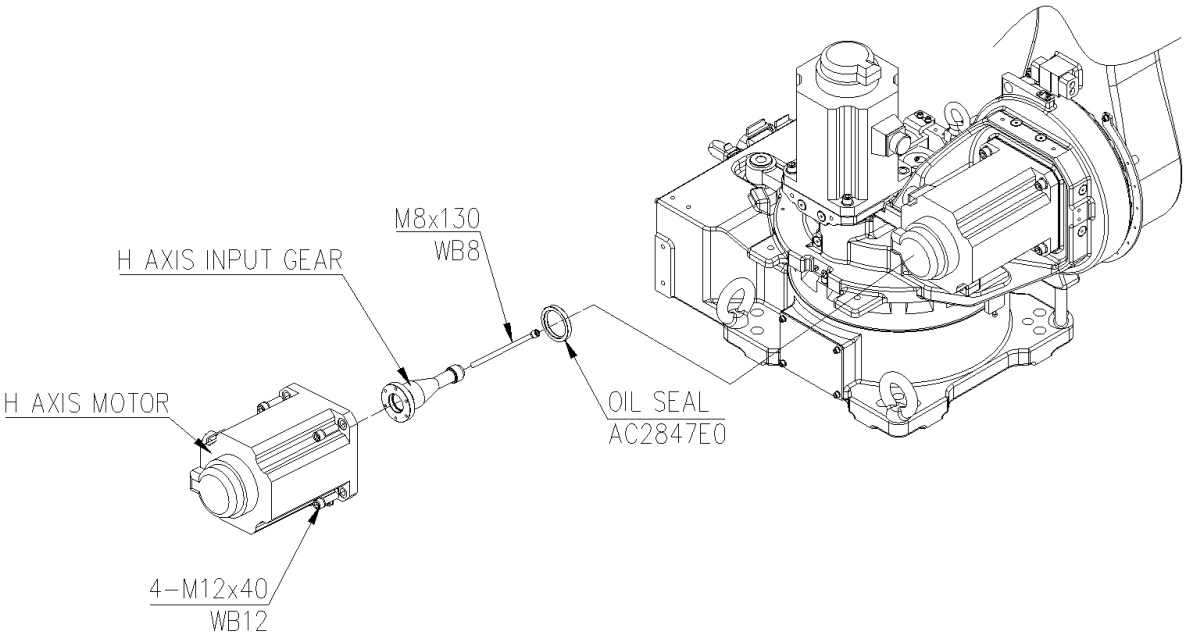

Figure 6.2 Axis H motor assembly

Caution

If the entire upper arm is not completely attached to the mechanical stopper in a gravitational direction when replacing the motor of the V-axis, the upper arm may rotate when the motor is being dismantled.

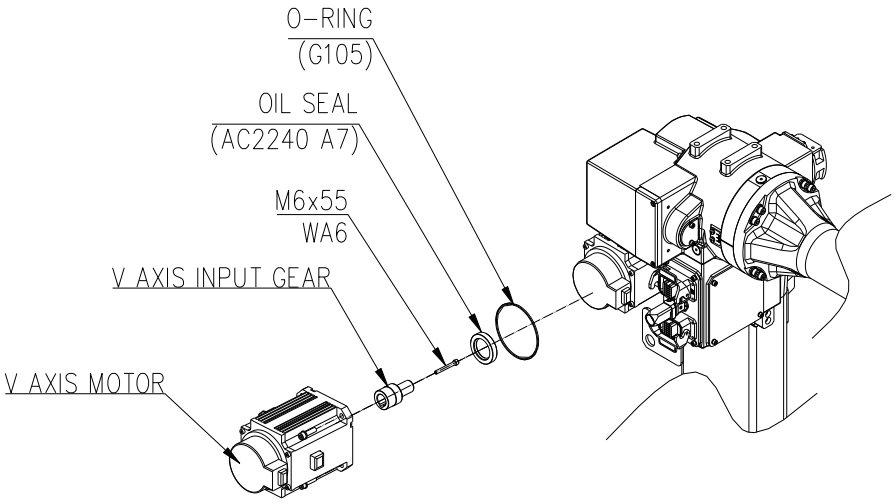

Figure 6.3 Axis V motor assembly

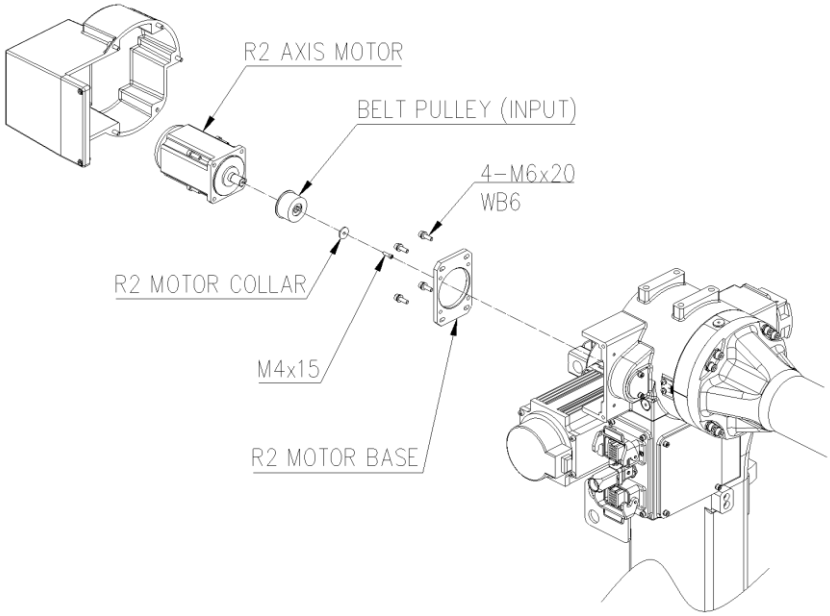

Figure 6.4 Axis R2 motor assembly

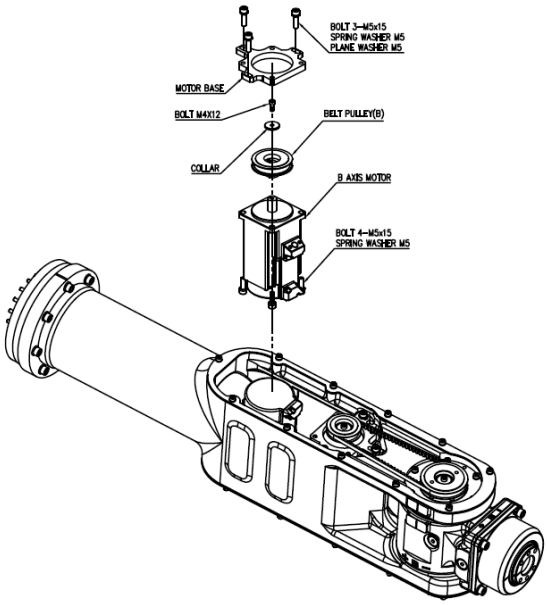

Figure 6.5 Axis B motor assembly

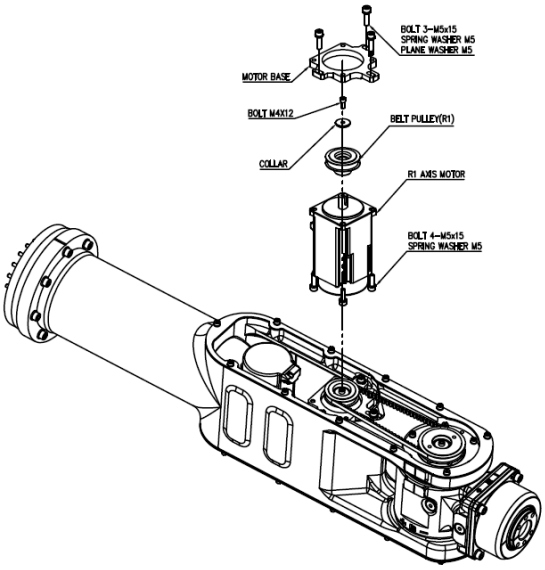

Figure 6.6 Axis R1 motor assembly

6.5. Encoder Zero Setting

It is necessary to reset the origin when encoder data has been corrupted due to some problems and when the motor is replaced.

Scale is used for deciding the location of the reference position of each axis of the robot. When the user replaces the motor, set the encoder using the scale to set the zero point of each axis

Warning

In this work, there is a part performing in the state of motor [ON]. Therefore, this work must be performed in pairs. One must always be ready to activate an emergency stop. The other must perform the work quickly but carefully.
An escape route should be determined before starting work.

6.5.1. Zero Setting

(1) Put the controller into TEACH mode and select [MOTOR ON]. If you cannot select MOTOR On due to abnormality, set the origin position of the robot by using the brake release switch.

(2) Move respective axes to the basic posture, and then set them by the scale mark.

(3) Reset the Encoder. Refer to『6.5.2 Encoder Reset』for the method of encoder reset.

(4) Correct the encoder. Refer to『Controller Operation Manual』.

(5) Confirm that there is no problem in robot motion.

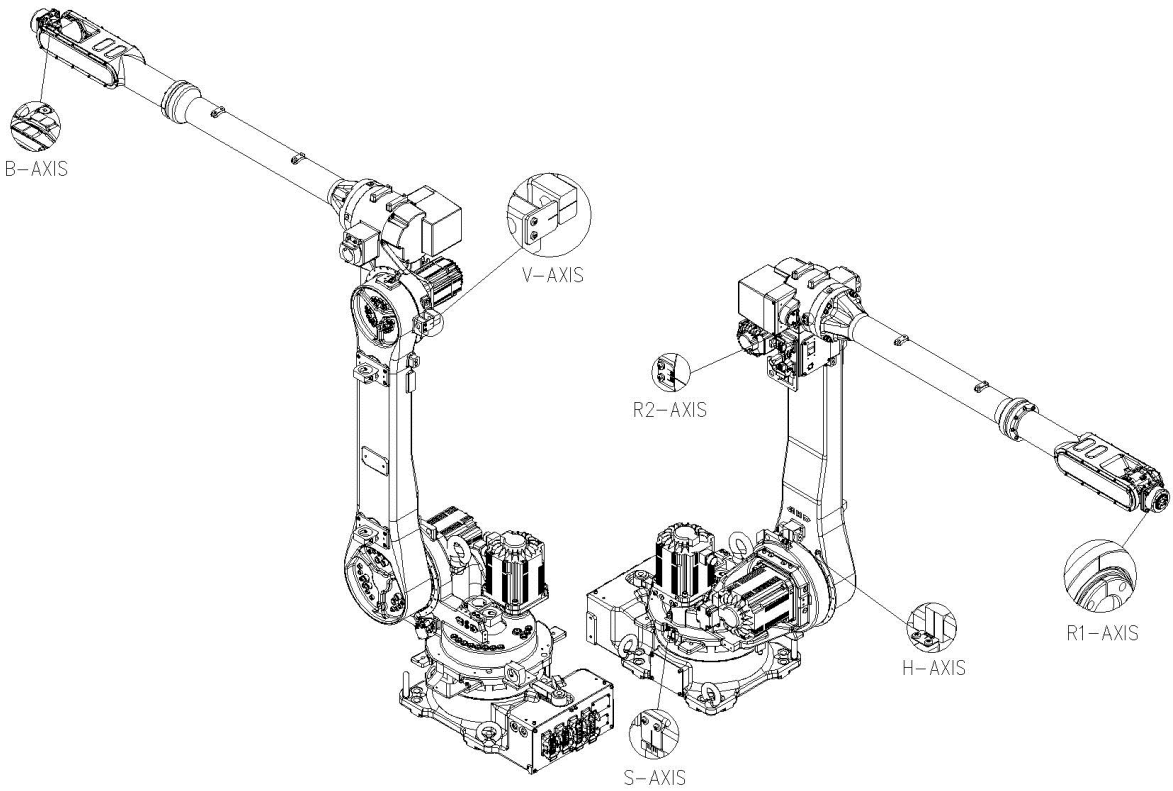

Figure 6.7 Method of Zero Setting [HDR20L-32]

6.5.2. Encoder Reset

(1) Turn off the motor.

(2) Open the serial encoder reset window. (『[F2]: System』 → 『5: Initialize』 → 『4: Serial encoder reset』)

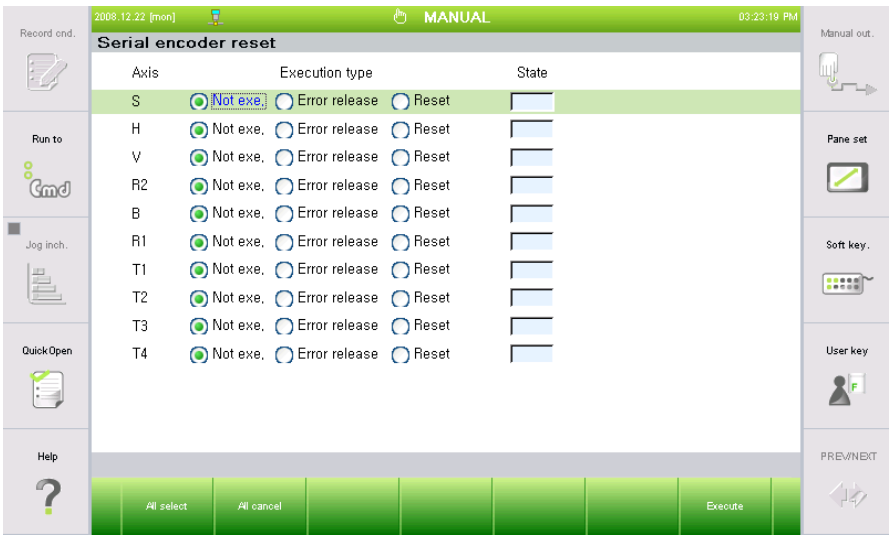

(3) Use keys like [↓], [↑], [SHIFT]+[<-][->] to move to a desirable axis, then press the [Execute] key.

(4) After the encoder is reset, please make sure the controller power is turned on.

6.5.3. Encoder offset and Selection

- It is necessary to compensate encoder data for the basic position of each axis.
- Refer to 『Encoder offset』in the Controller Manual for details

[Encoder offset Screen]

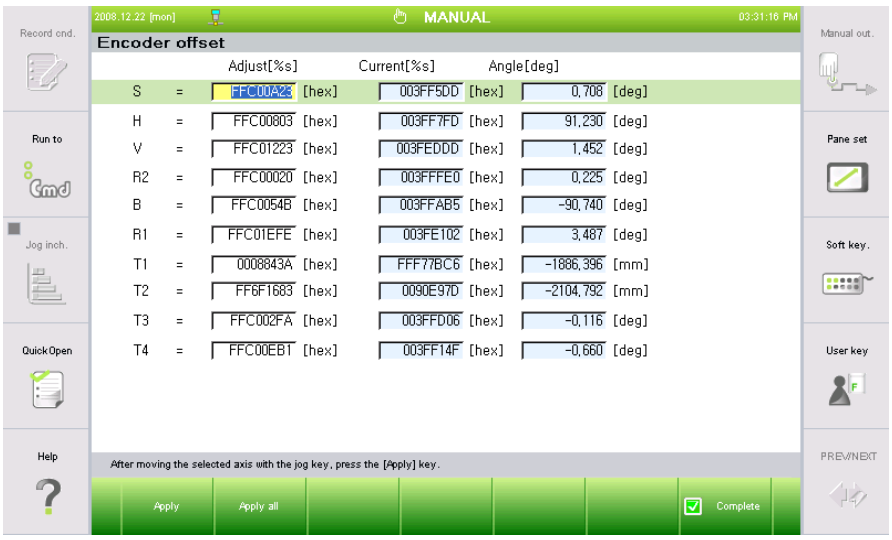

(1) Select the axis, move the axis to a standard position using the [Axis operation] key, and press the 『[F1]: Apply』key.

(2) Place the robot's entire axis as the standard position using the [Axis operation] key and press the 『[F2]: Apply all』 key to carry out encoder offset correction for the entire axis.

(3) To save the set data, press the 『[F7]: Complete』 key. The [ESC] key will prevent the changes being saved.

Warning

In case of encoder DATA compensation after replacing motor, check if the motor power is on with the power 『ON』.

7

Recommended Spare Parts

7. Recommended Spare Parts

The recommended spare parts for robot are as follows. Please check robot serial number and manufacturing date when purchasing, and contact our service office.

[Category]
A : Regular maintenance parts(what is replaced regularly)
B : Essential spare parts (what is of high frequency)
C : Essential component parts
D : Machine parts

Table 7-1 Spare Parts List

Category	Robot Applied	PLATE No.	Product Name and Specification	Quantity	Remark
A	HDR20L-32	R7900004400 R7900004402	VIGO GREASE (1CAN=16KG) RV GREASE LB00 (1CAN=16kg)	1CAN	Common
A		R7900015261	SK-1A GREASE (1CAN)	1CAN	Common
A		P7900061890	Encoder Battery	6EA	Common
B		PS900001829	MOTOR	2EA	S, H-Axis
B		PS900001827	MOTOR	1EA	V-Axis
B		R7900058931	MOTOR	1EA	R2-Axis
B		PS901003046	MOTOR	2EA	B, R1-Axis
C		R7900264930	REDUCER	1EA	S-Axis
C		R7900013010	REDUCER	1EA	H-Axis
C		R7900254510	REDUCER	1EA	V-Axis
C		R7900056920	REDUCER	1EA	R2-Axis
C		PS900002881	REDUCER	1EA	B-Axis
C		PS902000107	REDUCER	1EA	R1-Axis
C		R7101433522	WRIST ASSY	1EA	WRIST ASSY

Cate gory	Robot Applied	PLATE No.	Product Name and Specification	Quantity	Remark
D		P7900066860	CABLE ASSY	1EA	CABLE ASSY
D		R7900093210	BALL BEARING	2EA	S-Axis
D	HDR20L-32	R7900092870	BALL BEARING	1EA	R2-Axis
D		PS903169033	BALL BEARING	1EA	B-Axis
D		PS903156881	BALL BEARING	1EA	B-Axis
D		PS903168131	BALL BEARING	2EA	B-Axis
D		PS903160043	BALL BEARING	1EA	R1-Axis
D		PS903160041	BALL BEARING	3EA	R1-Axis
D		PS903169121	BALL BEARING	2EA	R1-Axis
D		R7900085410	OIL SEAL	3EA	S, H, R2-Axis
D		R7900084830	OIL SEAL	1EA	S-Axis
D		R7900098170	OIL SEAL	1EA	V-Axis
D		PS922130406	OIL SEAL	1EA	R1-Axis
D		R7900480860	OIL SEAL	2EA	B, R1-Axis
D		R7900105860	O-RING	1EA	S-Axis
D		R7900085040	O-RING	1EA	S-Axis
D		R7900084950	O-RING	2EA	S, H-Axis
D		R7900400780	O-RING	1EA	S-Axis
D		R7900104200	O-RING	1EA	H-Axis
D		R7900107140	O-RING	1EA	H-Axis
D		R7900106680	O-RING	1EA	V-Axis

Category	Robot Applied	PLATE No.	Product Name and Specification	Quantity	Remark
D		R7900087300	O-RING	1EA	V-Axis
D		R7900443350	O-RING	1EA	V-Axis
D	HDR20L-32	R7900102170	O-RING	1EA	R2-Axis
D		PS900001707	TIMING BELT	1EA	R2-Axis
D		P7900079490	TIMING BELT	1EA	B-Axis
D		PS900001765	LIMIT SWITCH	1EA	S-Axis (Option)
D		PS915000048	LIMIT SWITCH	2EA	H,V-Axis (Option)

8

Decommissioning

8.1. Material for each robot part

The robot is made up of several materials as shown in [Table 8-1]. Some of them should be properly arranged and sealed up to eliminate any bad influence on the human body or environment.

Table 8-1 Materials of each part

Parts	Materials
Battery	NiCad or Lithium
Wiring, Motor	Copper
Base body, Lower Frame, Upper Frame etc.	Cast Iron
Brakes, Motors	Samarium Cobalt(or Neodymium)
Wiring, Connectors	Plastic / Rubber
Reducers, Bearings	Oil / Grease
Wrist cover etc.	Aluminum alloy cast

9

Internal Wiring Diagram

Internal wiring is shown in a connection diagram per unit, and thus utilizes it to inspect and replace the wiring.

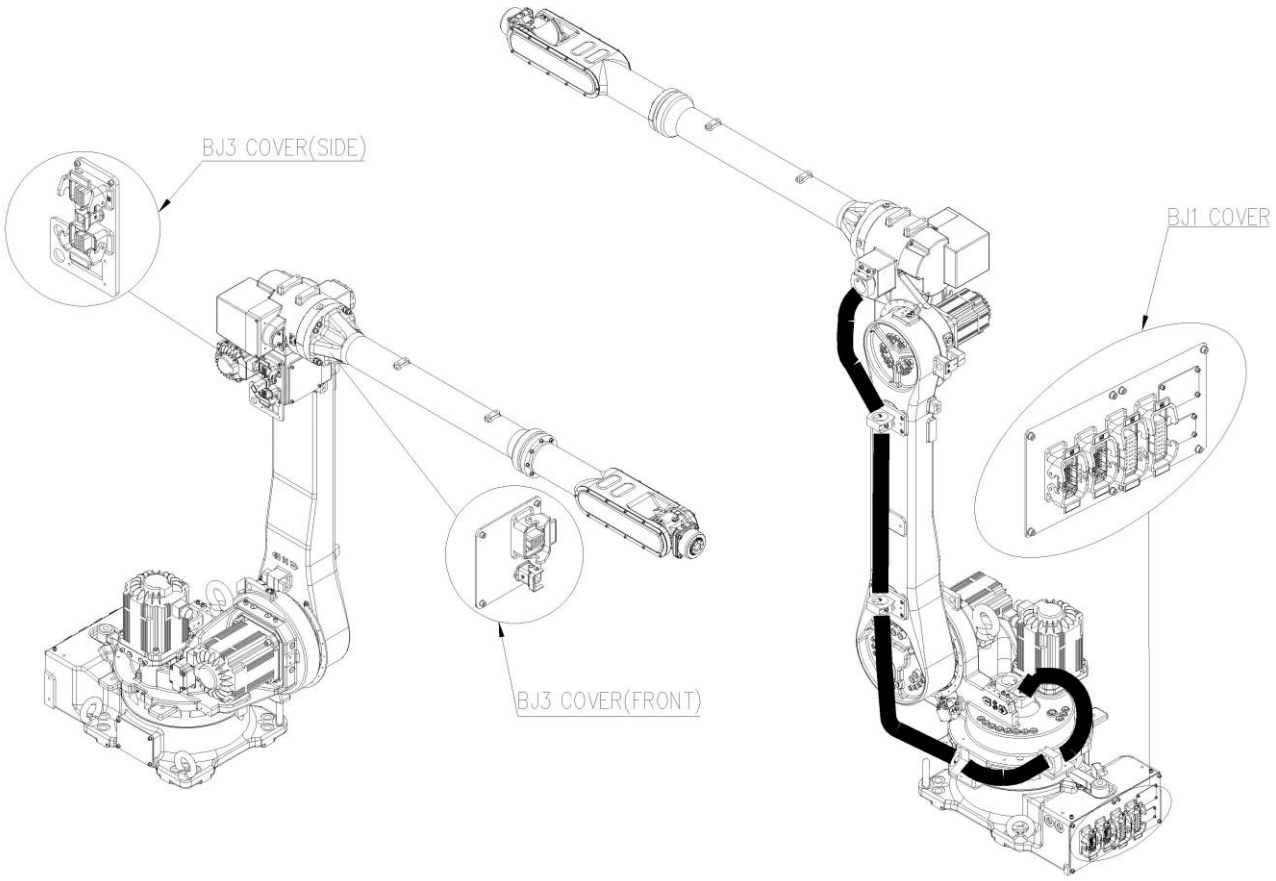

Figure 9.1 Manipulator Configuration

HEXA SOCKET HEAD TIGHTENING TORQUE [kgf·cm]		
나사	Normal 일반	HELI-COIL 헬리코일
M3	18	16
M4	41	37
M5	83	75
M6	140	130
M8	340	310
M10	680	610
M12	1180	1020
M14	1880	1640
M16	2950	2600
M18	4050	3660
M20	5700	5100
M22	7620	6850
M24	9680	8710

나사	MOTOR 모터	REDUCER 감속기
M4	37	46
M5	75	92
M6	120	155
M8	300	380
M10	540	750
M12	940	1300
M14	-	2050
M16	-	3200
M18	-	4410
M20	-	6350

OTHER TIGHTENING TORQUE STANDARD [kgf·cm]		
나사	BOTH BOLT 양쪽볼트	FLAT BOLT 한쪽볼트
M3	7	7
M4	18	18
M5	41	41
M6	83	83
M8	141	141
M10	340	340

NO.	DESCRIPTION	MATERIAL (MAKER)	Q'TY	WEIGHT	REMARK

■ 적용 로봇 MODEL : HH020L / HDR20L-32

CABLE SUB ASSY (HH020L / HDR20L-32)

(Revision No. : V03)

REVISION NO	CONTENTS	DATE
R0	INITIAL DRAWING	2016.04.01
R1	CABLE 부분 공용화 (브라켓 A ~ E)	2016.12.01
R2	글자크기 변경(확대)	2017.07.14
R3	Cable 및 lever 사양 변경	2020.08.13
V01	R1,B축 배터리 케이블 작업성 개선	2023.01.12
V02	H축 모터사양 누락분 기입	2024.04.12
V03	HDR20L-32 사양 입력	2024.11.18

DWN	DSND	CHKD	CHKD	APPD	REASON FOR MODIFICATION	Q'TY	NO.
김익진 2024.11.27	김익진 2024.11.27		이광한 2024.11.28	김민국 2024.11.28	모터용량 오기 수정	-	03
김익진 2024.05.07	김익진 2024.05.07		이광한 2024.05.07	김민국 2024.05.07	모터용량 오기 수정	-	02
김익진 2023.01.12	김익진 2023.01.12			정찬호 2023.01.13	B축, R1축 인코더 케이블 작업성 고려 배터리케이블 분리		01
H.K.Kim 2016.11.25	H.K.Kim 2016.11.25	H.K.Kim 2016.11.25	B.H.Lee 2016.11.25	J.Y.Lee 2016.11.25	First Issue		0

CC : Confidential Code

SCALE 1/1 | UNIT NO. 6202 | INFO NO. 62-02-0061 | PAINTING INNER COLOR OIL PROOF / OUTER COLOR OIL PROOF

PROJECT | TITLE CABLE FOR ARM (HH020L) | W/O NO.

1 SET | CC B | Sheet 8/8 | DWG NO. R6301144313-03

HD HYUNDAI ROBOTICS

A3 (420x297mm)

THIS DRAWING CONTAINS CONFIDENTIAL PROPRIETARY INFORMATION. HENC, THE REPRODUCTION,TRANSFER AND/OR UTILIZATION IN WHOLE OR IN PART ARE PROHIBITED WITHOUT THE WRITTEN PERMISSION OF HD HYUNDAI ROBOTICS CO., LTD.

HEXA SOCKET HEAD TIGHTENING TORQUE (kgf.cm)		
12.9	Normal 일반	HELI-COIL 헬리코일
M3	18	16
M4	41	37
M5	83	75
M6	140	130
M8	340	310
M10	680	610
M12	1180	1020
M14	1880	1640
M16	2950	2600
M18	4050	3660
M20	5700	5100
M22	7620	6850
M24	9680	8710

12.9	MOTOR 모터	REDUCER 감속기
M4	37	46
M5	75	92
M6	120	155
M8	300	380
M10	540	750
M12	940	1300
M14	-	2050
M16	-	3200
M18	-	4410
M20	-	6350

OTHER TIGHTENING TORQUE STANDARD (kgf.cm)		
12.9	BUTTON BOLT 둥근머리	FLAT BOLT 접시머리
M3	7	7
M4	18	18
M5	41	41
M6	83	83
M8	141	141
M10	340	340

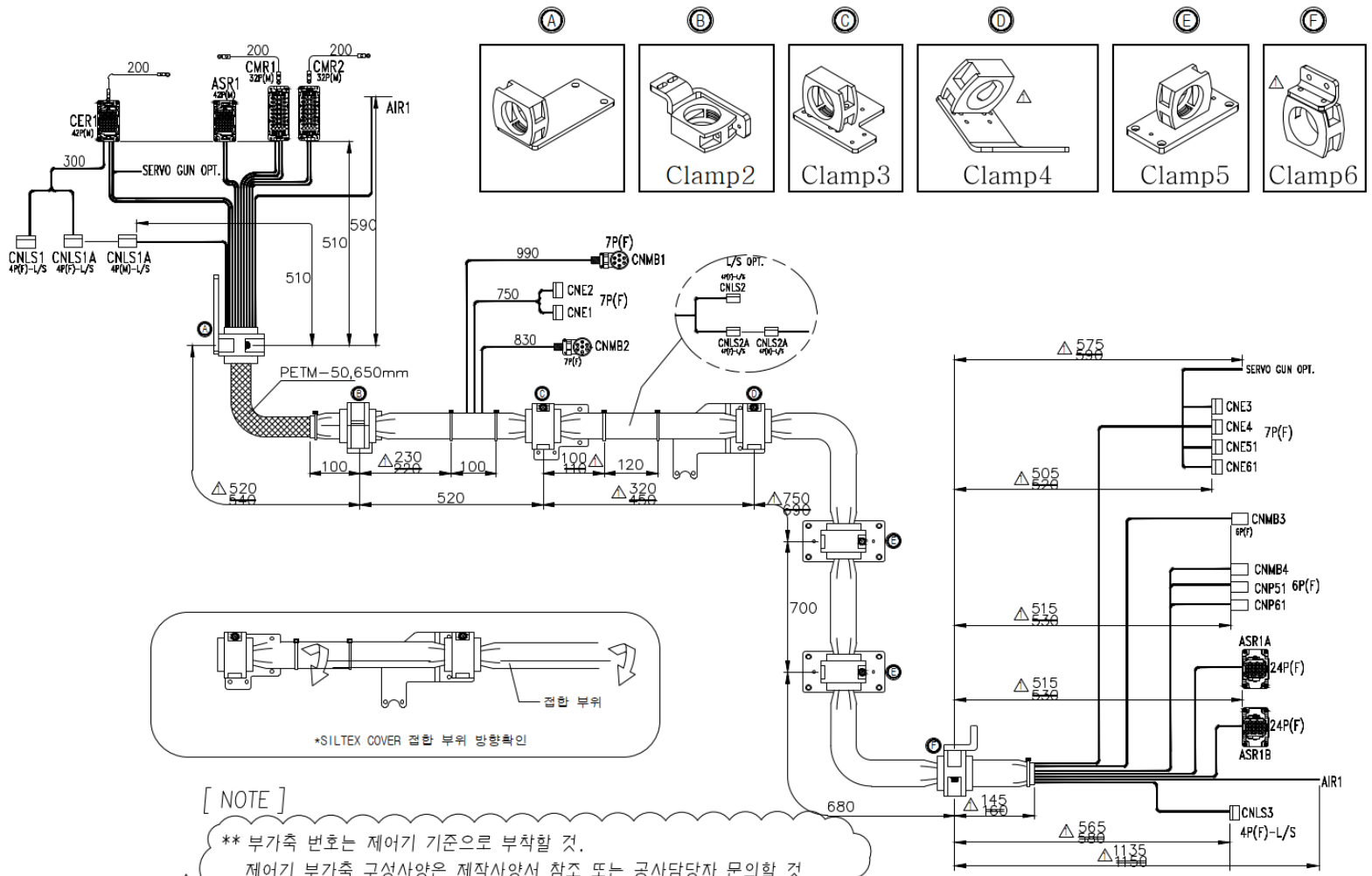

[NOTE]

** 부가축 번호는 제어기 기준으로 부착할 것.
제어기 부가축 구성사양은 제작사양서 참조 또는 공사담당자 문의할 것.

R3 문구추가

NO.	DESCRIPTION	MATERIAL (MAKER)	Q'TY	WEIGHT	REMARK

DWN	DSND	CHKD	CHKD	APPD	REASON FOR MODIFICATION	Q'TY	NO.
김익진 2024.11.27	김익진 2024.11.27		이광한 2024.11.28	김헌극 2024.11.28	모터용량 오기 수정	-	03
김익진 2024.05.07	김익진 2024.05.07		이광한 2024.05.07	김헌극 2024.05.07	모터용량 오기 수정	-	02
김익진 2023.01.12	김익진 2023.01.12			정신호 2023.01.13	B축, R1축 인코더 케이블 작업성 고려		01
H.K.Kim 2016.11.25	H.K.Kim 2016.11.25	H.K.Kim 2016.11.25	B.H.Lee 2016.11.25	J.Y.Lee 2016.11.25	First Issue		0

SCALE 1/1	PROJECT	1 SET	CC B
UNIT NO. 6202	TITLE CABLE FOR ARM (HH020L)	DWG NO. R6301144313-03	Sheet 8/8
INFO NO. 62-02-0061			
PAINTING INNER COLOR DIL PROOF / OUTER COLOR DIL PROOF	W/O NO.	HD HYUNDAI ROBOTICS	

CC : Confidential Code

THIS DRAWING CONTAINS CONFIDENTIAL PROPRIETARY INFORMATION. HENC, THE REPRODUCTION,TRANSFER AND/OR UTILIZATION IN WHOLE OR IN PART ARE PROHIBITED WITHOUT THE WRITTEN PERMISSION OF HD HYUNDAI ROBOTICS CO., LTD.

A3 (420x297mm)

No	Description(업체No)	단위	USAGE	업체명	No	Description(업체No)	단위	USAGE	업체명
1	INSERT : 182 679 0000	EA	2	Weidmuller	12	RING TM'L : 2.5-4R	EA	2	동아넥스틱
2	TM'L : 120 060 0000	EA	21	Weidmuller	13	△ ROTPEV ~~ROFHV~~-2.0SQ*12C	mm	4,700	LS
3	TM'L : 120 070 0000	EA	19	Weidmuller	14	△ ROTPEV ~~ROFHV~~-0.75SQ*6C	mm	5,200	LS
4	TM'L : 120 070 0000	EA	6	option	15	△ ROTPEV ~~ROFHV~~-0.5SQ*6C	mm	14,100	LS
5	PIN : 120 360 0000	EA	4	Weidmuller	16	UL1015 AWG14 B	mm	60	LS
6	HOUSING : ~~127 497 0000~~ △248 859 0000	EA	2	Weidmuller	17	UL1015 AWG14 GY	mm	440	LS
7	DUSTCOVER : 794 008 5090	EA	2	Weidmuller	18	ø9.0 BLACK 열수축튜브	mm	400	한미케이블
8	H : MS3108B 24-10S	EA	2	YUNHAB	19	ø14.0 BLACK 열수축 튜브	mm	200	한미케이블
9	H : VLP-06V OR C6201HF-2x3P	EA	4	JST OR CJT	20	NO TUBE	EA	44	
10	T:SVF-42T-P2.0 OR C6201F-TP-L	EA	24	JST OR CJT	21	NAME TIE	EA	7	
11	R : VLS-03V OR C6201S-3P-IV	EA	8	JST OR CJT					

NO.	DESCRIPTION	MATERIAL (MAKER)	Q'TY	WEIGHT	REMARK

HEXA SOCKET HEAD TIGHTENING TORQUE (kgf·cm)		
12.9	Normal 일반	HIGH-COR 방청강용
M3	18	16
M4	41	37
M5	83	75
M6	140	130
M8	340	310
M10	680	610
M12	1180	1020
M14	1880	1640
M16	2950	2600
M18	4050	3660
M20	5700	5100
M22	7620	6850
M24	9680	8710

12.9	MOTOR 모터	REDUCER 감속기
M4	37	46
M5	75	92
M6	120	155
M8	300	380
M10	540	750
M12	940	1300
M14	-	2050
M16	-	3200
M18	-	4410
M20	-	6350

OTHER TIGHTENING TORQUE STANDARD (kgf·cm)		
12.9	BUTTON BOLT 둥근머리	FLAT BOLT 접시머리
M3	7	7
M4	18	18
M5	41	41
M6	83	83
M8	141	141
M10	340	340

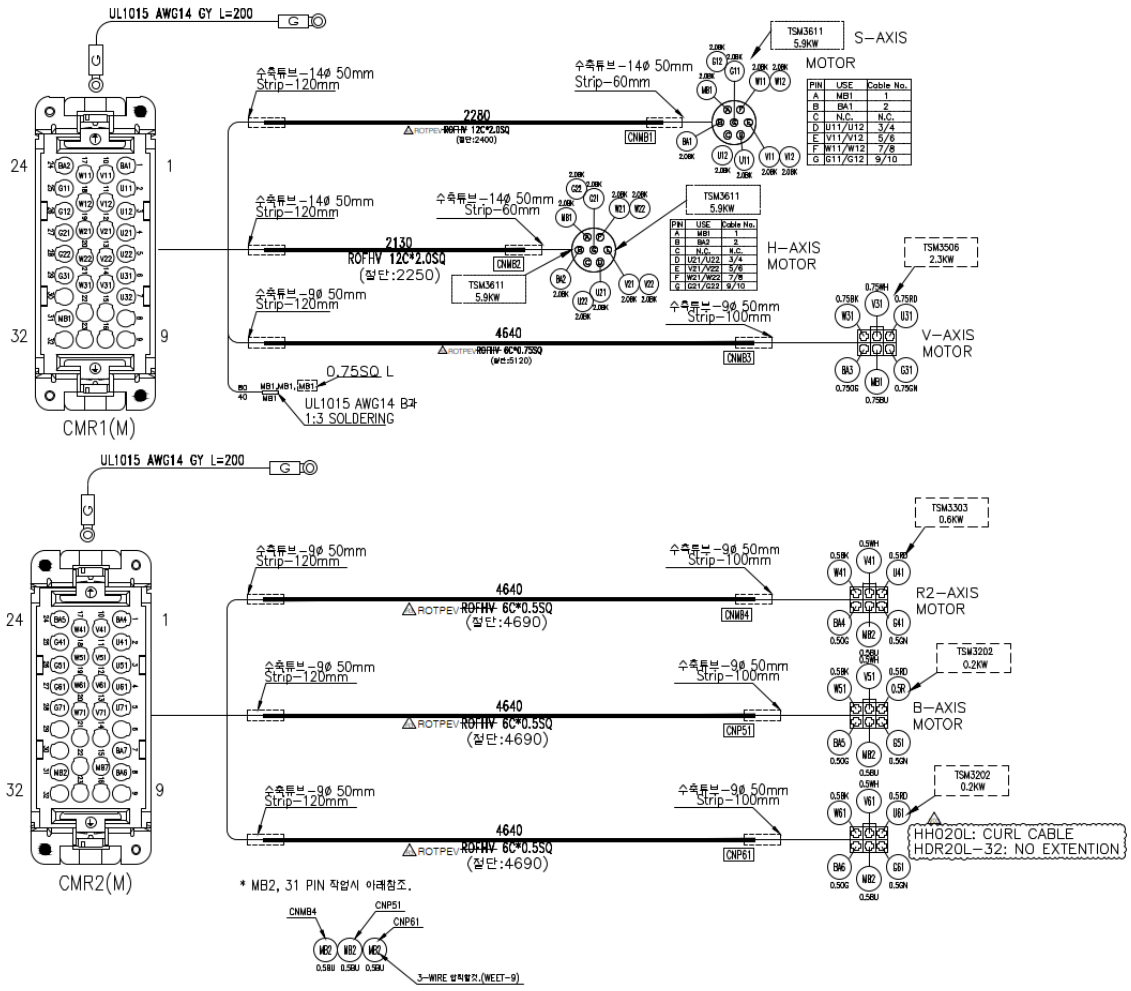

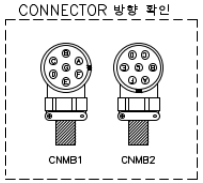

(BU)	BLUE
(BK)	BLACK
(RD)	RED
(BN)	BROWN
(LBU)	LIGHT BLUE
(WH)	WHITE
(GN)	GREEN
(OG)	ORANGE
(YE)	YELLOW
(GY)	GRAY
(PP)	PURPLE
(PK)	PINK
(VT)	VIOLET

DWN	DSND	CHKD	CHKD	APPD	REASON FOR MODIFICATION	Q'TY	NO.
김익진 2024.11.27	김익진 2024.11.27		이광번 2024.11.28	김현극 2024.11.28	모터용량 오기 수정	-	03
김익진 2024.05.07	김익진 2024.05.07		이광번 2024.05.07	김현극 2024.05.07	모터용량 오기 수정	-	02
김익진 2023.01.12	김익진 2023.01.12			정찬호 2023.01.13	B축, R1축 인코더 케이블 작업성 고려 케이블 변경		
H.K.Kim 2016.11.25	H.K.Kim 2016.11.25	H.K.Kim 2016.11.25	B.H.Lee 2016.11.25	J.Y.Lee 2016.11.25	First Issue		0

SCALE 1/1	PROJECT	1 SET	CC B
UNIT NO. 6202	TITLE CABLE FOR ARM (HH020L)	DWG NO. R6301144313-03	Sheet 8/8
INFO NO. 62-02-0061			
PAINTING INNER COLOR / OUTER COLOR	W/O NO.		
UL PROOF / UL PROOF			

CC Confidential Code

HD HYUNDAI ROBOTICS

THIS DRAWING CONTAINS CONFIDENTIAL PROPRIETARY INFORMATION. HENC, THE REPRODUCTION,TRANSFER AND/OR UTILIZATION IN WHOLE OR IN PART ARE PROHIBITED WITHOUT THE WRITTEN PERMISSION OF HD HYUNDAI ROBOTICS CO., LTD.

A3 (420x297mm)

NO.	DESCRIPTION	MATERIAL (MAKER)	Q'TY	WEIGHT	REMARK

HEXA SOCKET HEAD TIGHTENING TORQUE (kgf.cm)		
12.9	Normal 일반	HIGH-COG 헬리코일용
M3	18	16
M4	41	37
M5	83	75
M6	140	130
M8	340	310
M10	680	610
M12	1180	1020
M14	1880	1640
M16	2950	2600
M18	4050	3660
M20	5700	5100
M22	7620	6850
M24	9680	8710

12.9	MOTOR 모터	REDUCER 감속기
M4	37	46
M5	75	92
M6	120	155
M8	300	380
M10	540	750
M12	940	1300
M14	-	2050
M16	-	3200
M18	-	4410
M20	-	6350

OTHER TIGHTENING TORQUE STANDARD (kgf.cm)		
12.9	BUTTON BOLT 둥근머리	FLAT BOLT 접시머리
M3	7	7
M4	18	18
M5	41	41
M6	83	83
M8	141	141
M10	340	340

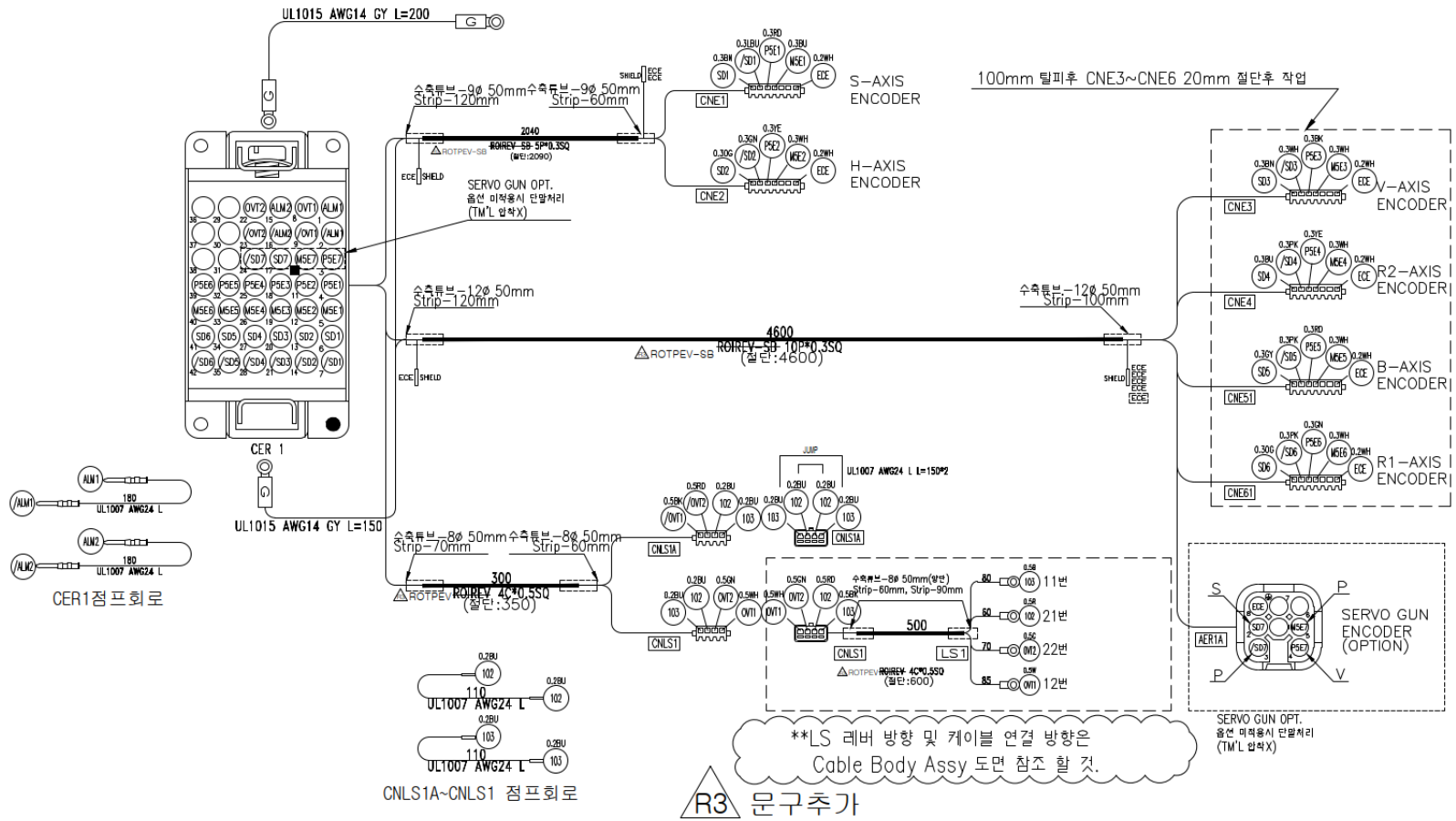

No	Description(업체No)	단위	USAGE	업체명
1	INSERT : 165 117 0000	EA	1	Weidmuller
2	TM'L : 165 152 0000	EA	24	Weidmuller
3	TM'L : 165 153 0000	EA	4	Weidmuller
4	PIN : 120 360 0000	EA	2	Weidmuller
5	HOUSING : ~~127 496 0000~~ △248 858 0000	EA	1	Weidmuller
6	DUSTCOVER : 794 008 5089	EA	1	Weidmuller
△ 7	H :SMP-07V-BC OR C2521HF-7P	EA	6	JST OR CJT
8	T:SHF-001T-0.8SS OR C2521F-TP	EA	38	JST OR CJT
9	H :SMP-04V-BC OR C2521HF-4P	EA	2	JST OR CJT
10	H :SMR-04V-B OR C2521HM-4P	EA	2	JST OR CJT
11	T:SYM-001T-0.6 OR C2521M-TP	EA	8	JST OR CJT
12	RING TM'L : 2.5-4R	EA	3	동아베스텍
13	~~UL1007 AWG24 L~~	mm	600	LS
14	ROTPEV-SB 0.3SQ*10P	mm	4,700	LS
15	ROTPEV-SB 0.3SQ*5P	mm	2,100	LS

△ ROTPEV-SB ~~ROIREV-SB~~

No	Description(업체No)	단위	USAGE	업체명
16	△ ROTPEV ~~ROIREV~~ 0.5SQ*4C	mm	1,000	LS
17	UL1015 AWG14 GY	mm	380	LS
18	L/S: D4N-5B22	EA	1	OMRON
19	CABLE GLAND: PG13.5 BK	EA	1	DONG-A
20	RING TM'L : 0.75-4R	EA	4	전오전기
21	ø8.0 BLACK 열수축 튜브	mm	200	한미케이블
22	ø9.0 BLACK 열수축 튜브	mm	100	한미케이블
23	ø12.0 BLACK 열수축 튜브	mm	100	한미케이블
24	NO TUBE	EA	82	
25	NAME TIE	EA	11	

(BU)	BLUE
(BK)	BLACK
(RD)	RED
(BN)	BROWN
(LBU)	LIGHT BLUE
(WH)	WHITE
(GN)	GREEN
(OG)	ORANGE
(YE)	YELLOW
(GY)	GRAY
(PP)	PURPLE
(PK)	PINK
(VT)	VIOLET

DWN	DSND	CHKD	CHKD	APPD	REASON FOR MODIFICATION	QTY	NO.
김익진 2024.11.27	김익진 2024.11.27		이광변 2024.11.28	김한국 2024.11.28	모터용량 오기 수정	-	03
김익진 2024.05.07	김익진 2024.05.07		이광변 2024.05.07	김한국 2024.05.07	모터용량 오기 수정	-	02
김익진 2023.01.12	김익진 2023.01.12			정선호 2023.01.13	B축, R1축 인코더 케이블 작업성 고려 케이블 변경		01
H.K.Kim 2016.11.25	H.K.Kim 2016.11.25	H.K.Kim 2016.11.25	B.H.Lee 2016.11.25	J.Y.Lee 2016.11.25	First Issue		0

SCALE 1/1	PROJECT	1 SET	CC B
UNIT NO. 6202	TITLE CABLE FOR ARM (HH020L)	DWG NO. R6301144313-03	Sheet 8/8
INFO NO. 62-02-0061			
PAINTING INNER COLOR / OUTER COLOR	W/O NO.		
UL PROOF / UL PROOF			

CC : Confidential Code

THIS DRAWING CONTAINS CONFIDENTIAL PROPRIETARY INFORMATION. HENC, THE REPRODUCTION,TRANSFER AND/OR UTILIZATION IN WHOLE OR IN PART ARE PROHIBITED WITHOUT THE WRITTEN PERMISSION OF HD HYUNDAI ROBOTICS CO., LTD.

A3 (420x297mm)

HEX SOCKET HEAD TIGHTENING TORQUE (kgf.cm)		
규격	Normal 일반	HEX-COL 렉서콜용
M3	18	16
M4	41	37
M5	83	75
M6	140	130
M8	340	310
M10	680	610
M12	1180	1020
M14	1880	1640
M16	2950	2600
M18	4050	3660
M20	5700	5100
M22	7620	6850
M24	9680	8710

규격	MOTOR 모터	REDUCER 감속기
M4	37	46
M5	75	92
M6	120	155
M8	300	380
M10	540	750
M12	940	1300
M14	-	2050
M16	-	3200
M18	-	4410
M20	-	6350

OTHER TIGHTENING TORQUE STANDARD (kgf.cm)		
규격	BUTTON HEAD 둥근머리	FLAT BOLT 접시머리
M3	7	7
M4	18	18
M5	41	41
M6	83	83
M8	141	141
M10	340	340

NO.	DESCRIPTION	MATERIAL (MAKER)	Q'TY	WEIGHT	REMARK

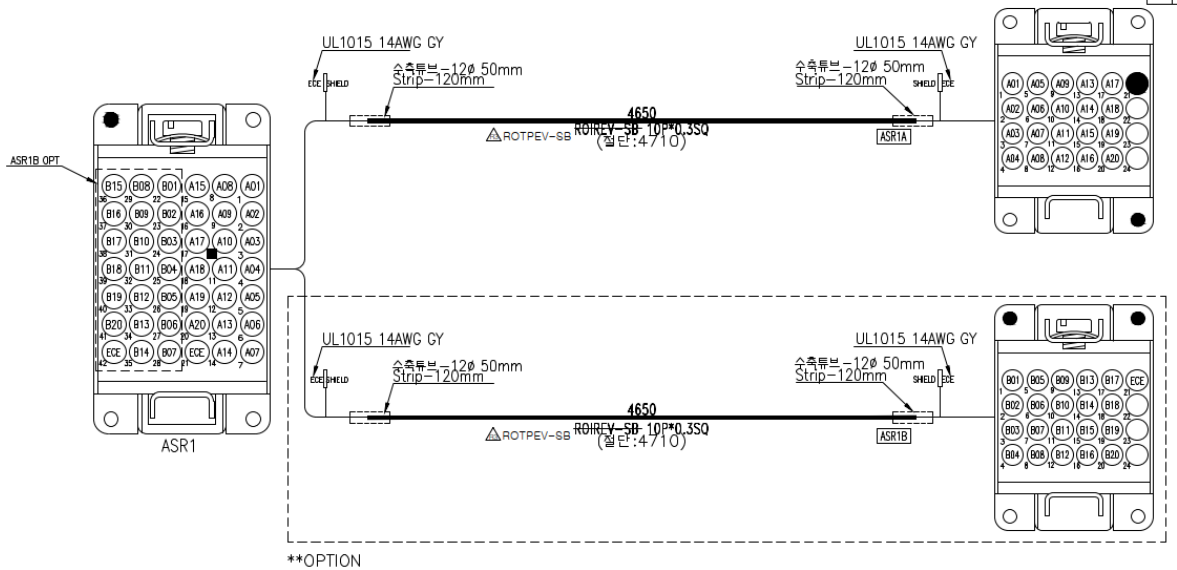

(BU)	BLUE
(BK)	BLACK
(RD)	RED
(BN)	BROWN
(LBU)	LIGHT BLUE
(WH)	WHITE
(GN)	GREEN
(OG)	ORANGE
(YE)	YELLOW
(GY)	GRAY
(PP)	PURPLE
(PK)	PINK
(VT)	VIOLET

ASR1A

PIN	COLOR	PIN	COLOR
1	YE	11	GY
2	WH	12	PK
3	GN	13	BU
4	WH	14	PK
5	BK	15	VT
6	WH	16	PK
7	RD	17	OG
8	WH	18	PK
9	BN	19	BU
10	WH	20	PK
		21	ECE

ASR1B OPT

PIN	COLOR	PIN	COLOR
22	YE	32	GY
23	WH	33	PK
24	GN	34	BU
25	WH	35	PK
26	BK	36	VT
27	WH	37	PK
28	RD	38	OG
29	WH	39	PK
30	BN	40	BU
31	WH	41	PK
		42	ECE

No	Description(업체No)	단위	USAGE	업체명
1	INSERT : 165 117 0000	EA	1	Weidmuller
2	TM'L : 165 152 0000	EA	21	Weidmuller
3	PIN : 120 360 0000	EA	4	Weidmuller
4	HOUSING : ~~127 496 0000~~ △248 858 0000	EA	1	Weidmuller
5	DUSTCOVER : 794 008 5089	EA	1	Weidmuller
6	INSERT : 165 116 0000	EA	1	Weidmuller
7	TM'L : 165 157 0000	EA	21	Weidmuller
8	HOUSING : 120 210 0000	EA	1	Weidmuller
9	DUSTCOVER : 24P DUST COVER	EA	1	Weidmuller
10	△ROTPEV-SB ~~ROIREV-SB~~ 0.3SQ*10P	mm	4,800	LS
11	UL1015 AWG14 GY	mm	260	LS
12	ø12.0 BLACK 열수축튜브	mm	100	한미케이블
13	NO TUBE	EA	42	
14	NAME TIE	EA	2	
15				

DWN	DSNO	CHKD	CHKD	APPD	REASON FOR MODIFICATION	Q'TY	NO.
김익진 2024.11.27	김익진 2024.11.27		이광반 2024.11.28	김한국 2024.11.28	모터용량 오기 수정	-	03
김익진 2024.05.07	김익진 2024.05.07		이광반 2024.05.07	김한국 2024.05.07	모터용량 오기 수정	-	02
김익진 2023.01.12	김익진 2023.01.12			장한호 2023.01.13	B측, R1측 인코더 케이블 작업성 고려 케이블 변경		01
H.K.Kim 2016.11.25	H.K.Kim 2016.11.25	H.K.Kim 2016.11.25	B.H.Lee 2016.11.25	J.Y.Lee 2016.11.25	First Issue		0

SCALE 1/1	PROJECT	1 SET	CC B
UNIT NO. 6202	TITLE CABLE FOR ARM (HH020L)	DWG NO. R6301144313-03	Sheet 8/8
INFO NO. 62-02-0061			
PAINTING INNER COLOR / OUTER COLOR	W/O NO.		
BL PROOF / BL PROOF			

CC: Confidential Code

THIS DRAWING CONTAINS CONFIDENTIAL PROPRIETARY INFORMATION. HENC, THE REPRODUCTION,TRANSFER AND/OR UTILIZATION IN WHOLE OR IN PART ARE PROHIBITED WITHOUT THE WRITTEN PERMISSION OF HD HYUNDAI ROBOTICS CO., LTD.

A3 (420x297mm)

NO.	DESCRIPTION	MATERIAL (MAKER)	Q'TY	WEIGHT	REMARK

HEXA SOCKET HEAD TIGHTENING TORQUE [kgf·cm]		
SIZE	Normal 일반	HELI-COIL 헬리코일용
M3	18	16
M4	41	37
M5	83	75
M6	140	130
M8	340	310
M10	680	610
M12	1180	1020
M14	1880	1640
M16	2950	2600
M18	4050	3660
M20	5700	5100
M22	7620	6850
M24	9680	8710

SIZE	MOTOR 모터	REDUCER 감속기
M4	37	46
M5	75	92
M6	120	155
M8	300	380
M10	540	750
M12	940	1300
M14	-	2050
M16	-	3200
M18	-	4410
M20	-	6350

OTHER TIGHTENING TORQUE STANDARD [kgf·cm]		
SIZE	BUTTON BOLT 둥근머리	FLAT BOLT 접시머리용
M3	7	7
M4	18	18
M5	41	41
M6	83	83
M8	141	141
M10	340	340

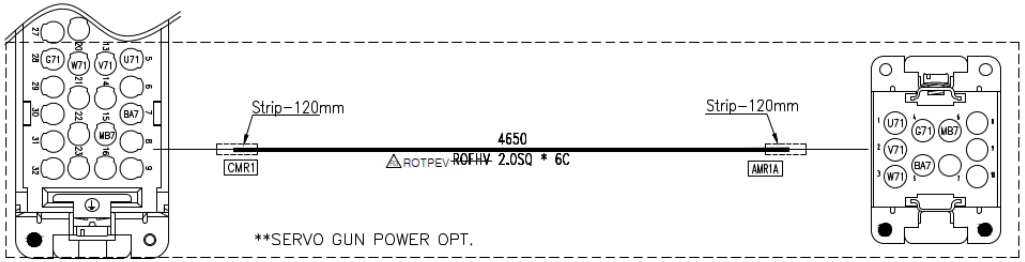

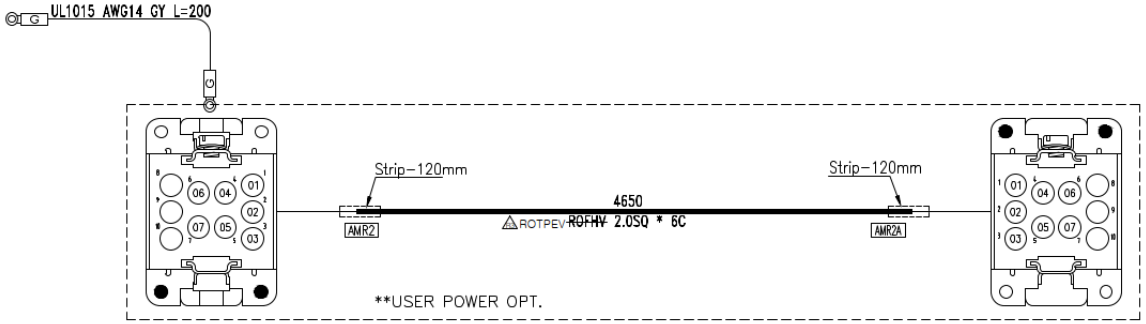

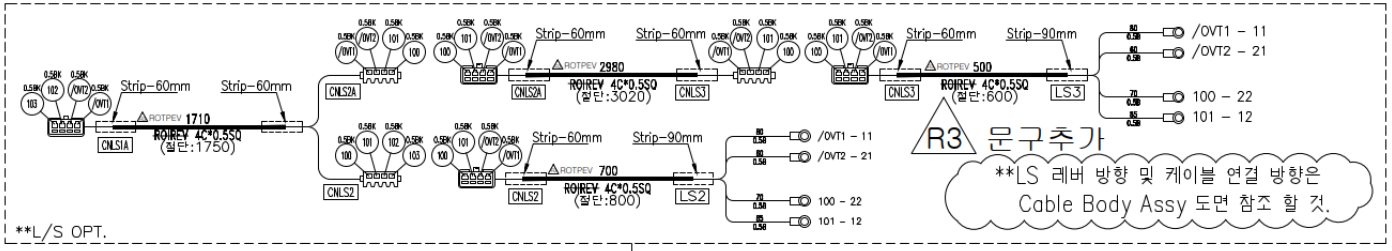

No	Description(업체No)	단위	USAGE	업체명
△ 1	H :SMP-04V-BC OR C2521HF-4P	EA	3	JST OR CJT
2	T:SHF-001T-0.8SS OR C2521F-TP	EA	12	JST OR CJT
3	H :SMR-04V-B OR C2521HM-4P	EA	4	JST OR CJT
4	T:SYM-001T-0.6 OR C2521M-TP	EA	16	JST OR CJT
5	L/S : D4N-5B32	EA	2	OMRON
6	CABLE GLAND: PG13.5 BK	EA	2	DONG-A
7	RING TM'L : 0.75-4R	EA	8	전오전기
8	△ROTPEV ~~ROIREV~~ 0.5SQ*4C	mm	6,200	LS
9	NO TUBE	EA	28	
10	NAME TIE	EA	7	
11				
12				
13				
14				
15				

(BU)	BLUE
(BK)	BLACK
(RD)	RED
(BN)	BROWN
(LBU)	LIGHT BLUE
(WH)	WHITE
(GN)	GREEN
(OG)	ORANGE
(YE)	YELLOW
(GY)	GRAY
(PP)	PURPLE
(PK)	PINK
(VT)	VIOLET

DWN	DSND	CHKD	CHKD	APPD	REASON FOR MODIFICATION	Q'TY	NO.
김익진 2024.11.27	김익진 2024.11.27		이광한 2024.11.28	김민국 2024.11.28	모터용량 오기 수정	-	03
김익진 2024.05.07	김익진 2024.05.07		이광한 2024.05.07	김민국 2024.05.07	모터용량 오기 수정	-	02
김익진 2023.01.12	김익진 2023.01.12			정진호 2023.01.13	B축, R1축 인코더 케이블 작업성 고려 페이퍼케이블 변경		
H.K.Kim 2016.11.25	H.K.Kim 2016.11.25	H.K.Kim 2016.11.25	B.H.Lee 2016.11.25	J.Y.Lee 2016.11.25	First Issue		0

SCALE 1/1	PROJECT	1 SET	CC B
UNIT NO. 6202	TITLE CABLE FOR ARM (HH020L)	DWG NO. R630144313-03	Sheet 8/8
INFO NO. 62-02-0061			
PAINTING INNER COLOR / OUTER COLOR	W/O NO.		
BL PROOF / BL PROOF			

CC : Confidential Code

THIS DRAWING CONTAINS CONFIDENTIAL PROPRIETARY INFORMATION. HENC, THE REPRODUCTION,TRANSFER AND/OR UTILIZATION IN WHOLE OR IN PART ARE PROHIBITED WITHOUT THE WRITTEN PERMISSION OF HD HYUNDAI ROBOTICS CO., LTD.

A3 (420x297mm)

HEXA SOCKET HEAD TIGHTENING TORQUE (kgf·cm)		
SIZE	Normal 일반	HELI-COIL 헬리코일용
M3	18	16
M4	41	37
M5	83	75
M6	140	130
M8	340	310
M10	680	610
M12	1180	1020
M14	1880	1640
M16	2950	2600
M18	4050	3660
M20	5700	5100
M22	7620	6850
M24	9680	8710

SIZE	MOTOR 모터	REDUCER 감속기
M4	37	46
M5	75	92
M6	120	155
M8	300	380
M10	540	750
M12	940	1300
M14	-	2050
M16	-	3200
M18	-	4410
M20	-	6350

OTHER TIGHTENING TORQUE STANDARD (kgf·cm)		
SIZE	BUTTON HEAD 둥근머리	FLAT HEAD 접시머리
M3	7	7
M4	18	18
M5	41	41
M6	83	83
M8	141	141
M10	340	340

NO.	DESCRIPTION	MATERIAL (MAKER)	Q'TY	WEIGHT	REMARK

HH020L 전용
HDR20L-32 미사용

V03

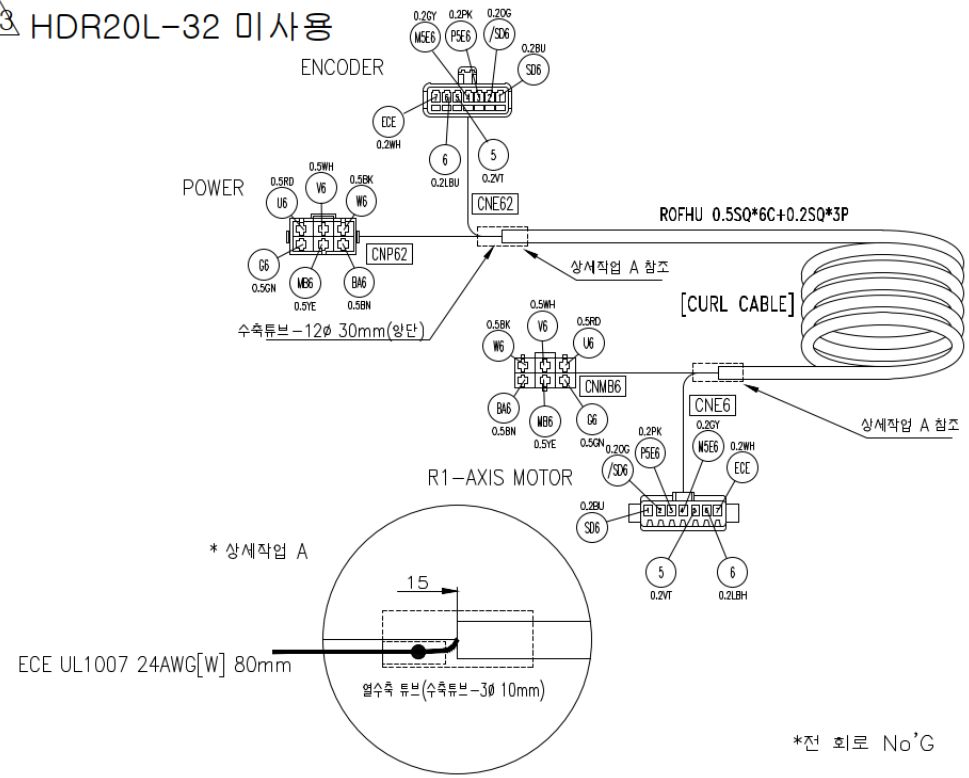

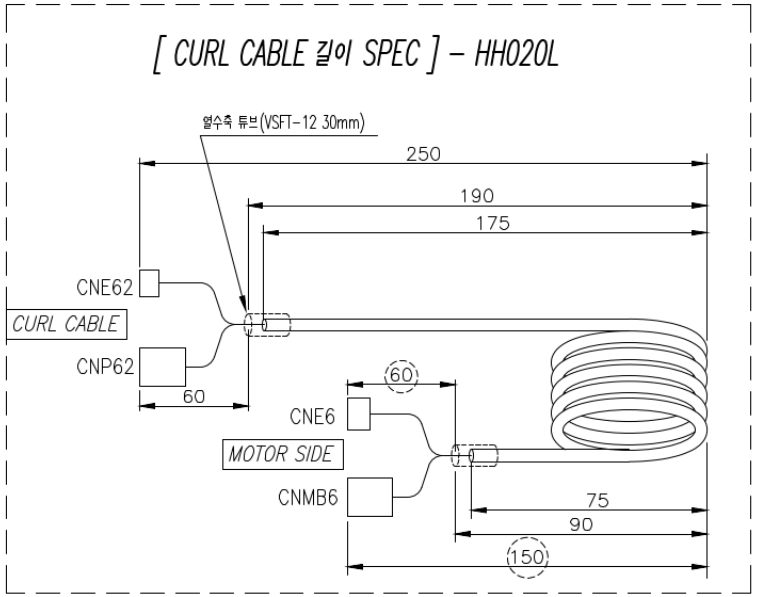

*전 회로 No'G

No	Description(업체No)	단위	USAGE	업체명
1	H : VLP-06V OR C6201HF-2x3P	EA	1	JST OR CJT
2	SVF-42T-P2.0 OR C6201F-TP-L	EA	6	JST OR CJT
3	R: VLS-03V OR C6201S-3P-IV	EA	4	JST OR CJT
4	H : VLR-06V OR C6201HM-2x3P	EA	1	JST OR CJT
5	SVM-61T-P2.0 OR C6201M-TP	EA	6	JST OR CJT
6	H: SMP-07V-BC OR C2521HF-7P	EA	1	JST OR CJT
7	SHF001T-0.8SS OR C2521F-TP	EA	7	JST OR CJT
8	H: SMR-07V-B OR C2521HM-7P	EA	1	JST OR CJT
9	SYM-001T-0.6 OR C2521M-TP	EA	7	JST OR CJT
10	HEATING TUBE ø12	mm	60	한미케이블
11	HEATING TUBE ø3	mm	120	한미케이블
12	CURL CABLE(SB)	EA	1	LS
13	UL1007 24AWG W	mm	100	LS
14	NO TUBE	EA	26	
15	NAME TIE	EA	4	

(BU)	BLUE
(BK)	BLACK
(RD)	RED
(BN)	BROWN
(LBU)	LIGHT BLUE
(WH)	WHITE
(GN)	GREEN
(OG)	ORANGE
(YE)	YELLOW
(GY)	GRAY
(PP)	PURPLE
(PK)	PINK
(VT)	VIOLET

DWN	DSND	CHKD	CHKD	APPD	REASON FOR MODIFICATION	Q'TY	NO.
김익진 2024.11.27	김익진 2024.11.27		이광한 2024.11.28	김한국 2024.11.28	모터동장 오기 수정	-	03
김익진 2024.05.07	김익진 2024.05.07		이광한 2024.05.07	김한국 2024.05.07	모터동장 오기 수정	-	02
김익진 2023.01.12	김익진 2023.01.12			정찬호 2023.01.13	B측, R1측 인코더 케이블 작업성 고려 케이블 분리		01
H.K.Kim 2016.11.25	H.K.Kim 2016.11.25	H.K.Kim 2016.11.25	B.H.Lee 2016.11.25	J.Y.Lee 2016.11.25	First Issue		0

SCALE 1/1	PROJECT	1 SET	CC B
UNIT NO. 6202	TITLE CABLE FOR ARM (HH020L)	DWG NO. R6301144313-03	Sheet 8/8
INFO NO. 62-02-0061			
PAINTING INNER COLOR / OUTER COLOR	W/O NO.		
BL PROOF / BL PROOF			

CC Confidential Code

HD HYUNDAI ROBOTICS

THIS DRAWING CONTAINS CONFIDENTIAL PROPRIETARY INFORMATION. HENC, THE REPRODUCTION,TRANSFER AND/OR UTILZATION IN WHOLE OR IN PART ARE PROHIBITED WITHOUT THE WRITTEN PERMISSION OF HD HYUNDAI ROBOTICS CO., LTD.

A3 (420x297mm)

HEXA SOCKET HEAD TIGHTENING TORQUE [kgf·cm]		
12.9	Normal 일반	HELI-COIL 헬리코일
M3	18	16
M4	41	37
M5	83	75
M6	140	130
M8	340	310
M10	680	610
M12	1180	1020
M14	1880	1640
M16	2950	2600
M18	4050	3660
M20	5700	5100
M22	7620	6850
M24	9680	8710

12.9	MOTOR 모터	REDUCER 감속기
M4	37	46
M5	75	92
M6	120	155
M8	300	380
M10	540	750
M12	940	1300
M14	-	2050
M16	-	3200
M18	-	4410
M20	-	6350

OTHER TIGHTENING TORQUE STANDARD [kgf·cm]		
12.9	BUTTON BOLT 둥근머리	FLAT BOLT 접시머리
M3	7	7
M4	18	18
M5	41	41
M6	83	83
M8	141	141
M10	340	340

NO.	DESCRIPTION	MATERIAL (MAKER)	Q'TY	WEIGHT	REMARK
000	CABLE FOR ARM (HH020L)		1		

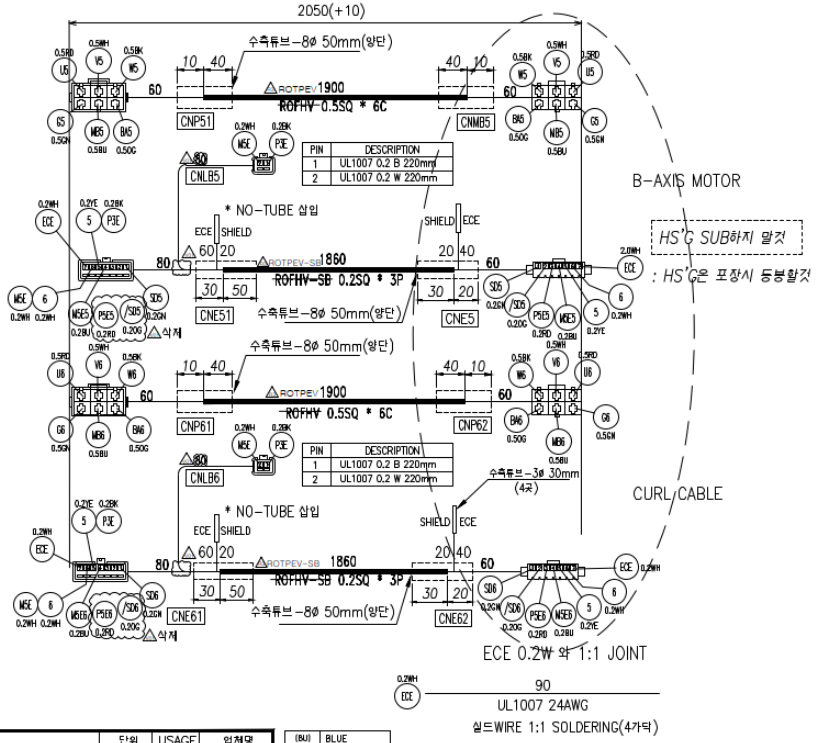

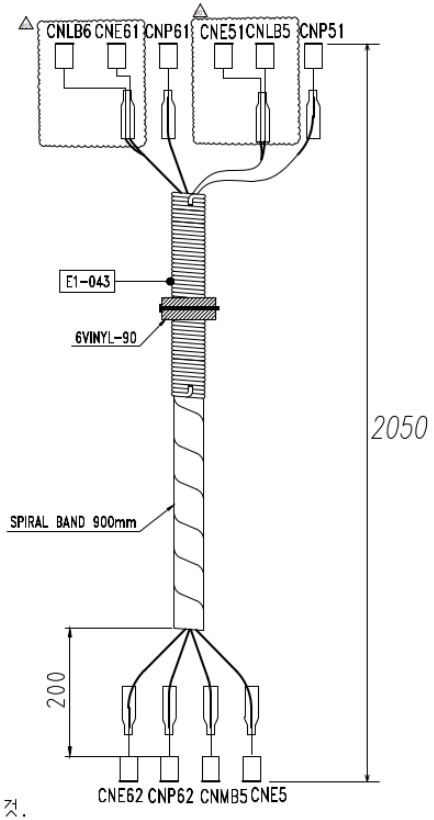

No	Description(업체No)	단위	USAGE	업체명
△ 1	VLP-06V OR C6201HF-2x3P	EA	2	JST OR CJT
2	SVF-42T-P2.0 OR C6201F-TP-L	EA	12	JST OR CJT
3	VLS-03V OR C6201S-3P-IV	EA	8	JST OR CJT
4	VLR-06V OR C6201HM-2x3P	EA	2	JST OR CJT
5	SVM-61T-P2.0 OR C6201M-TP	EA	12	JST OR CJT
6	SMP-07V-BC OR C2521HF-7P	EA	2	JST OR CJT
7	SHF001T-0.8SS OR C2521F-TP	EA	14	JST OR CJT
8	SMR-07V-B OR C2521HM-7P	EA	2	JST OR CJT
9	SYM-001T-0.6 OR C2521M-TP	EA	14	JST OR CJT
10	SMR-02V-B OR C2521HM-2P	EA	2	JST OR CJT
11	HEATING TUBE ø8	EA	320	HAN MI
12	HEATING TUBE ø3	EA	120	HAN MI
13	△ ROTPEV-SB ~~ROFHV-SB~~ 0.2SQ*3P	mm	4,000	LS
14	△ ROTPEV ~~ROFHV~~ 0.5SQ*6C	mm	4,100	LS
15	UL1007 24AWG W	mm	800	LS
16	UL1007 24AWG B	mm	440	LS
17	HA020-E1-043	EA	1	제이에스텍
18	JSW-15F(SPIRAL BAND 15Ø)	mm	900	진오전기
19	VINYL ø90*0.1t*300MM	EA	3	신진산업
20	NO TUBE	EA	1	
21	NAME TIE	EA	1	

(BU)	BLUE
(BK)	BLACK
(RD)	RED
(BN)	BROWN
(LBU)	LIGHT BLUE
(WH)	WHITE
(GN)	GREEN
(OG)	ORANGE
(YE)	YELLOW
(GY)	GRAY
(PP)	PURPLE
(PK)	PINK
(VT)	VIOLET

[NOTE]

* ROTPEV 0.5SQ*6C는 2080mm 절단 할 것.
  실드의 쉬이즈는 양단 60mm 벗겨내고 열수축 처리
* ROTPEV-SB 0.2SQ*3P는 2100mm 절단 할 것.
  실드의 쉬이즈는 양단 90mm 벗겨내고 은색편조선은 70mm 절단후
  미사용 WIRE는 근접 절단할것

DWN	DSND	CHKD	CHKD	APPD	REASON FOR MODIFICATION	QTY	NO.
김익진 2024.11.27	김익진 2024.11.27		이광범 2024.11.28	김현국 2024.11.28	모터용량 오기 수정	-	03
김익진 2024.05.07	김익진 2024.05.07		이광범 2024.05.07	김현국 2024.05.07	모터용량 오기 수정	-	02
김익진 2023.01.12	김익진 2023.01.12			정찬호 2023.01.13	B축, R1축 인코더 케이블 작업성 고려 헬리코이드 변경		01
H.K.Kim 2016.11.25	H.K.Kim 2016.11.25	H.K.Kim 2016.11.25	B.H.Lee 2016.11.25	J.Y.Lee 2016.11.25	First Issue		0

SCALE 1/1	PROJECT	1 SET	CC B
UNIT NO. 6202	TITLE CABLE FOR ARM (HH020L)		Sheet 8/8
INFO NO. 62-02-0061		DWG NO. R6301144313-03	
PAINTING INNER COLOR / OUTER COLOR / BL PROOF	W/O NO.		

CC : Confidential Code

THIS DRAWING CONTAINS CONFIDENTIAL PROPRIETARY INFORMATION. HENC, THE REPRODUCTION,TRANSFER AND/OR UTILIZATION IN WHOLE OR IN PART ARE PROHIBITED WITHOUT THE WRITTEN PERMISSION OF HD HYUNDAI ROBOTICS CO., LTD.

A3 (420x297mm)

GRC: 477, Bundangsuseo-ro, Bundang-gu, Seongnam-si, Gyeonggi-do, Republic of Korea
Daegu: 50, Techno sunhwan-ro 3-gil, Yuga-eup, Dalseong-gun, Daegu, Republic of Korea
Ulsan: Room 2015, Automobile and Ships Technology Hall, 21, Maegoksaneop-ro, Buk-gu, Ulsan, Republic of Korea
Jungbu: 161, Songgok-gil, Yeomchi-eup, Asan-si, Chungcheongnam-do, Republic of Korea
Room 101, Bldg. B, 170-3, Pyeongdongsandan-ro, Gwangsan-gu, Gwangju, Republic of Korea
ARS 1588-9997
www.hyundai-robotics.com