WARNING

All installation work must be performed by a qualified installer and comply with applicable laws and regulations.

Hyundai Robot

HDR8-14250327MMEN5

Manipulator Maintenance Manual

HDR8-14/HDR12-14/HDR12H-14

HD HYUNDAI ROBOTICS

The information presented in the manual is the property of HDHyundai Robotics.
Any copy or even partial is not allowed without prior written authorization
from HDHyundai Robotics.
It may not be provided to the third party, nor used for any other purposes.

HDHyundai Robotics reserves the right to modify without prior notification.

Printed in Korea - May. 2025. 5th Edition
Copyright © 2025 by HDHyundai Robotics Co., Ltd.

Contents

1. Safety 1-1

1.1. Introduction 1-2
1.2. Relevant Safety Regulations 1-4
1.3. Safety Training 1-4
1.4. Safety Related Nameplate 1-5
1.4.1. Safety Marking 1-5
1.4.2. Safety Nameplate 1-5
1.5. Definition of Safety Functions 1-6
1.6. Installation 1-7
1.6.1. Safety Fence 1-7
1.6.2. Placement of Robot & Peripheral Equipment 1-9
1.6.3. Installing the Robot 1-13
1.6.4. Space for Robot Installation 1-16
1.7. Safety Operation for Robot Handling 1-17
1.7.1. Safety Precautions for Robot Handling 1-17
1.7.2. Safety Precautions for Operating Test 1-21
1.7.3. Safety Precautions for Automatic Operation 1-22
1.8. Safety Precautions for Access to Safety Fence 1-23
1.9. Safety Precautions for Maintenance and Repair 1-25
1.9.1. Safety Precautions for Controller Maintenance and Repair 1-25
1.9.2. Safety Precautions for Robot System & Manipulator Maintenance 1-26
1.9.3. Necessary Actions after Maintenance and Repair 1-26
1.10. Safety Functions 1-27
1.10.1. Operating a Safety Circuit 1-27
1.10.2. Emergency stop 1-29
1.10.3. Operating Speed 1-30
1.10.4. Connecting the Safety Devices 1-30
1.10.5. Restricting the working Envelope 1-30
1.10.6. Monitoring Function 1-30
1.11. Safety Related to End Effectors 1-32
1.11.1. Gripper 1-32
1.11.2. Tool / Workpiece 1-32
1.11.3. Pneumatic and Hydraulic Systems 1-32
1.12. Liabilities 1-33

2. Specifications 2-1

2.1. Format for the Robot Mechanical Part 2-2
2.2. Location of the Robot Nameplate 2-3
2.3. Basic Specifications 2-5
2.4. External Dimensions of the Manipulator and the Work Envelope 2-7

2.5. Names of operating axes 2-9
2.6. Detailed Diagram of the Wrist Axis Attachment Surface 2-11
2.7. Detailed Diagram of Arm 1 Top Attachment Surface 2-13
2.8. Wiring and Piping Diagrams for Applications 2-15
2.9. Restricting the Work Envelope 2-17

3. Precautions for Handling 3-1

3.1. Names of Individual Parts 3-2
3.2. Location of the Safety Nameplate 3-4
3.3. How to Transport 3-6
3.3.1. Using a Crane 3-6
3.3.2. Use a Forklift 3-8
3.4. Storage of the robot 3-10
3.5. Installation Methods 3-11
3.5.1. Working Conditions 3-11
3.5.2. Installation of the Manipulator 3-11
3.5.3. Dimensions of the Installation Surface 3-12
3.5.4. Accuracy of the Installation Surface 3-13
3.5.5. Emergency Stop Time and Distance 3-13
3.6. Allowable Load of the Wrist Axis 3-14
3.6.1. Allowable load torque calculation 3-14
3.6.2. Calculation of the allowable moment of inertia 3-16
3.6.3. Example of the calculation of the allowable torque and moment of inertia(HS180 Case) 3-17

4. Inspection 4-1

4.1. Inspection Plan 4-2
4.2. Inspection Items and Cycles 4-3
4.3. Inspection of Main External Bolts 4-5
4.4. Inspecting the Wiring Inside the Manipulator 4-6
4.4.1. Conditions for Safety Inspection 4-6
4.4.2. Inspection parts 4-6
4.5. Inspection of the Timing Belt 4-7

5. Maintenance 5-1

5.1. Grease injection after grease replacement and reducer replacement 5-2
5.1.1. S-Axis Reducer 5-4

5.1.2. H/V-Axis Reducer 5-6
5.2. Replacing the Battery 5-9
5.2.1. Precautions for Battery Storage 5-10
5.3. Replacement of Wiring Inside the Manipulator 5-11

6. Troubleshooting 6-1

6.1. How to Investigate the Causes of the Issues 6-2
6.2. Symptoms and Causes of Issues 6-3
6.3. How to Investigate and Handle Each Part 6-5
6.3.1. Reducers 6-5
6.3.2. Brake 6-7
6.3.3. Motor 6-7
6.3.4. Encoder 6-8
6.4. Motor Replacement 6-9
6.4.1. Necessary Tools and Parts 6-10
6.4.2. How to Replace the Motor 6-11
6.5. Encoder Origin Setting 6-16
6.5.1. Setting the Origin 6-16
6.5.2. Encoder Resetting 6-18
6.5.3. Encoder Offsetting 6-19
6.5.4. Mastering (Option) 6-20

7. Recommended Spare Parts 7-1

8. Dismantle 8-1

9. Diagram for the Wiring inside the Manipulator 9-1

List of Figures

Figure 1.1 Recommended size for safety net and entrance gate (slot type entrance gate) 1-7
Figure 1.2 Recommended size for safety net and entrance gate (square type entrance gate) 1-7
Figure 1.3 Arrangement of LCD robot peripheral devices and workers 1-11
Figure 1.4 Arrangement of general robot peripheral devices and workers 1-12
Figure 1.5 Configuration for safety chain 1-27
Figure 1.6 Connection with external emergency halt switch through system board terminal block TBEM 1-29
Figure 2.1 Format for the Robot Mechanical Part 2-2
Figure 2.2 The Attachment Location of the Robot Nameplate (HDR8-14/HDR12-14) 2-3
Figure 2.3 The Attachment Location of the Robot Nameplate (HDR12H-14) 2-4
Figure 2.4 External Dimensions of the Manipulator and the Work Envelope (HDR8-14/HDR12-14) 2-7
Figure 2.5 External Dimensions of the Manipulator and the Work Envelope (HDR12H-14) 2-8
Figure 2.6 Appearance of the Manipulator and the Operation Axes 2-10
Figure 2.7 Details of the Wrist Axis Attachment Surface (HDR8-14/HDR12-14) . . . 2-11
Figure 2.8 Details of the Wrist Axis Attachment Surface (HDR12H-14) 2-12
Figure 2.9 Detailed Diagram of Arm 1 Top Attachment Surface (HDR8-14/UA012) 2-13
Figure 2.10 Detailed Diagram of Arm 1 Top Attachment Surface (HDR12H-14) 2-14
Figure 2.11 Wiring and Piping Diagrams for Applications (HDR8-14/HDR12-14) . . . 2-15
Figure 2.12 Wiring and Piping Diagrams for Applications (HDR12H-14) 2-15
Figure 2.13 Details of the Application Connectors 2-16
Figure 3.1 The Names of the Manipulator's Individual Parts (up) HDR8-14/HDR12-14 (down) HDR12H-14 3-2
Figure 3.2 Location of the Safety Nameplate (HDR8-14/HDR12-14) 3-4
Figure 3.3 Location of the Safety Nameplate (HDR12H-14) 3-5
Figure 3.4 How to Transport: Using a Crane (HDR8-14/HDR12-14) 3-6
Figure 3.5 How to Transport: Using a Crane (HDR12H-14) 3-7
Figure 3.6 How to Transport: Using a Forklift (up) HDR8-14/UH021 (down) HDR12H-14 3-9
Figure 3.7 Dimensions of the Robot Installation Surface 3-12
Figure 3.8 Accuracy of the Robot Installation Surface 3-13
Figure 3.9 2D load model 3-17
Figure 3.10 2D Shape of the 3D Model Load 3-19
Figure 3.11 3D Shape of the 3D Load Model 3-21
Figure 4.1 Inspection parts of the main bolts (up)HDR8-14/HDR12-14 (down) HDR12H-14 4-5
Figure 4.2 Inspection Parts of the Cables (left) HDR8-14/HDR12-14 (right) HDR12H-14

. 4-6
Figure 4.3 Part of the timing belts of the B and R1 axes that need to be checked for tension 4-7
Figure 4.4 Part of the timing belts of the B and R1 axes that need to be checked for tension (HDR12H-14) 4-7
Figure 5.1 Locations of S-Axis Reducer Grease Inlet/Outlet 5-4
Figure 5.2 Location of the V-Axis Reducer Grease Inlet/Outlet 5-6
Figure 5.3 Location for the Replacement of the Battery 5-9
Figure 6.1 1st Arm (H axis) Fixing Bolt Insertion Location (left) HDR8-14/HDR12-14 (right) HDR12H-14 6-12
Figure 6.2 2nd Arm (V axis) Fixing Bolt Insertion Location (left) HDR8-14/HDR12-14 (right) HDR12H-14 6-12
Figure 6.3 S Axis Motor Assembly 6-13
Figure 6.4 Assembly of H and V Axes 6-13
Figure 6.5 Motor Assemblies of R2, B, and R1 Axes (HDR8-14/HDR12-14) 6-14
Figure 6.6 Motor Assemblies of R2, B, and R1 Axes (HDR12H-14) 6-15
Figure 6.7 How to Set the Origin (up) HDR8-14/HDR12-14 (down) HDR12H-14 6-17
Figure 6.8 Mastering Positions and Blocks for Individual Axes(HDR8-14/HDR12-14) 6-20
Figure 6.9 Mastering Positions and Blocks for Individual Axes (HDR12H-14) 6-21
Figure 9.1 Arrangement of the Parts of the Manipulator (left) HDR8-14/HDR12-14 (right) HDR12H-14 9-2

List of Tables

Table 1-1 Safety marking 1-5
Table 1-2 State of Robot Stop 1-19
Table 2-1 Basic Specification for Each Model 2-5
Table 2-2 Rotational Direction of Each Axis 2-9
Table 3-1 The Names of the Manipulator's Individual Parts 3-3
Table 3-2 Reaction infomation 3-12
Table 3-3 Allowable Load Torque 3-15
Table 3-4 Allowable moment of inertia 3-16
Table 3-5 Moment of inertia for each block at the center of gravity 3-22
Table 4-1 Inspection plan 4-2
Table 4-2 Inspection Items and Cycles 4-3
Table 4-3 Inspection parts of the main bolts 4-5
Table 6-1 Symptoms and Causes of Issues 6-3
Table 6-2 Weight (motor) 6-9
Table 6-3 Table for Mastering Parts 6-20
Table 7-1 List of Spare Parts 7-2
Table 8-1 Material for Each Part 8-2

1

Safety

1.1. Introduction

The main purpose of this chapter is to describe the safety precautions for users and operators who repair and manipulate the industrial robot.

This manual describes safety precautions for robot manipulator and controller, in complies with the safety regulation of EU Machinery Directive 98/37/EC(2006/42/EC) and US OSHA. And the robot manipulator and controller is manufactured to comply with the safety standards EN ISO 10218-1:2011 and ANSI/NFPA 79:2021.

Every operator, who installs, replaces, adjusts, manipulates, maintains, and repairs, must read thoroughly and fully understand the manipulation and maintenance manual, in particular, the special attention must be paid to the WARNING symbol, the most important marking related to the safety.

Installation, replacement, adjustment, manipulation, maintenance, and repair of robot system must be performed by the personnel who was duly trained for these purposes, following the indicated operating procedure.

This company is planning and carrying out the relevant training such as maintenance, repair, and manipulation for the above operations, so robot users make sure that robot operators should get the relevant training. And make sure that the robot handling work should be carried out only by the operators who completed this training course.

Hyundai Robotics user of industrial robot has responsibility to observe the safety regulation related to robot adopted in corresponding countries and responsibility to design, install and operate safety equipment well in order to protect workers who work at robot system.

In high-risk areas concerning robot systems in which robots, tools, and accessories operate, there must be a method of protection to stop the workers or objects from entering the area according to ANSI/NFPA 79:2021.

The areas for which the robot can be applied and the environment in which it can be used are as follows.

Applicable areas

It is applied to the industrial robot used by installing on the surface of wall or plane (axes addable). It is also appropriate for controlling operation in the dotted section or consecutive section.

Major application is

- Spot welding
- Arc welding
- Cutting
- Handling
- Assembly
- Application such as Sealing
- Palletizing
- Grinding

For the other use than the above emergency application, make a contact with our company to consult on the robot use and possible applications.

Disable environment

Our robot must not be used in a highly explosive environment and the areas contaminated by oil, flammable materials or chemical materials. (Prohibited to be installed and manipulated.)

1.2. Relevant Safety Regulations

The robot is designed as per ISO 10218-1:2011 safety standards for industrial robots, and furthermore in comply with ANSI/NFPA 79:2021 regulations.

1.3. Safety Training

All the personnel who intend to teach, operate or inspect the robot must be trained in an approved robotic operation and safety training course before start-up. The safety training course includes the following details:

- Purpose and functions of safety devices
- Safety procedure to handle the robot
- Performance of robot or the robot system and possible hazards
- Tasks associated with any specific robot applications
- Safety concepts, etc.

1.4. Safety Related Nameplate

1.4.1. Safety Marking

For the purpose of effective safety instructions, the following safety symbols are used in this manual.

Table 1-1 Safety marking

Symbols		Descriptions
Warning		Indicate a highly dangerous situation, meaning that operating or handling in a wrong manner could result in death or serious injury to personnel, or damage to equipment. Attention should be paid to the operation and handling.
Mandatory		Indicate the compulsory measures that should be taken
Prohibited		Indicate the prohibited actions and/or operations that should not be performed.

1.4.2. Safety Nameplate

Identification plates, warning label and safety symbols are attached to the robot and to the inside and outside of control panel. The designation labels and cable Mark for wire harness between the robot and control panel, and the cables inside/outside of control panel are provided.

All of these plates, labels, symbols and marks constitute safety-relevant parts of the robot and the control panel. They must remain attached to the robot manipulator and control panel at their clearly visible positions all the time for the safety and their full performance.

The painted markings on the floor and signs indicating dangerous zones must be clearly distinguished in form, color, and style from other markings on the machine near the robot system or inside the plant facilities where the robot system is installed.

It is forbidden to remove, cover, or paint over by way of spoiling the clearly visible identification plates, warning labels, safety symbols, designation labels and cable marks.

1.5. Definition of Safety Functions

Emergency Stop Functions – IEC 204-1,10,7

There is one emergency stop button on the controller and teach pendant respectively. If necessary, additional emergency buttons can be connected to the robot's safety chain circuit. The emergency stop function, which overrides all other robot controls, can bring the current operation to a halt by cutting off the power supply to the motors of individual axes. This function will also shut down the power supply to other dangerous functions, which are controlled by the robot, to prevent them from being used

Safety Stop Function - EN ISO 10218-1:2011

A safety stop circuit needs to be configured, and, through this circuit, each robot should be connected with the safeguards and interlocks. The robot should have a number of electrical input signals which can be used to connect external safety devices, such as safety gates, safety pads, and safety lamps. These signals allow the robot's safety functions to be activated by all equipment, including peripheral equipment and the robot itself.

Speed Limitation Function - EN ISO 10218-1:2011

In a manual mode, the maximum speed of the robot is limited to 250 mm per second.
The speed limitation applies not only to the TCP(Tool Center Point), but to all parts of manual mode robot. The speed of equipment mounted on the robot should be possibly monitored.

Restricting working Envelope - ANSI/NFPA 79:2021

Operation area of each axis is restricted by soft limit and hardware limit. Axis 1, 2, and 3 can also be restricted by means of mechanical stopper.

Operation Mode Selection - ANSI/NFPA 79:2021

The robot can be operated either in the manual mode or auto mode. In the manual mode, the robot can be operated only by using the teach pendant.

1.6. Installation

1.6.1. Safety Fence

Install safety fence against the possible collision between the robot and workers, so that no worker may approach the robot.

Install safety fence against the possible collision between the robot and workers, so that no worker may approach the robot. When operators or other personnel enter the robot's working envelope by accident, it may cause an accident. Install the safety fence to stop the robot when one, who intends to replace for TIP DRESSING or TIP changing replacement, or to inspect welding equipment, opens the fence gate and approaches the equipment during operation.

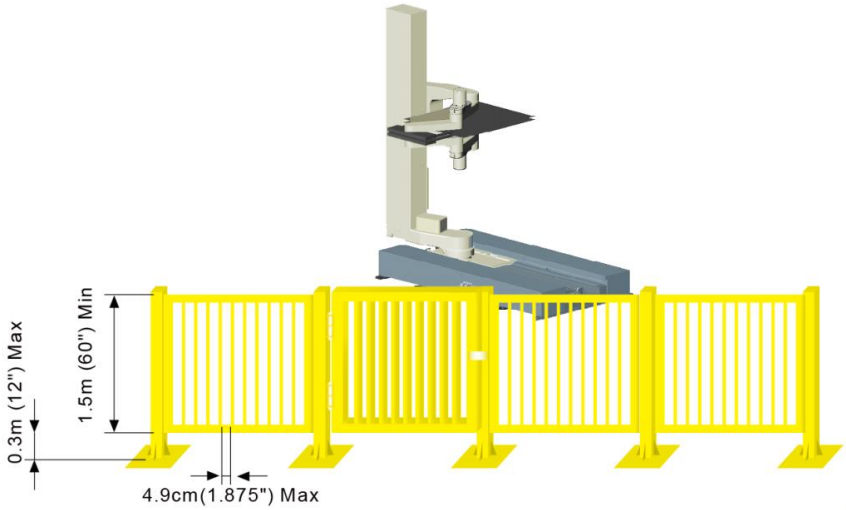

Figure 1.1 Recommended size for safety net and entrance gate (slot type entrance gate)

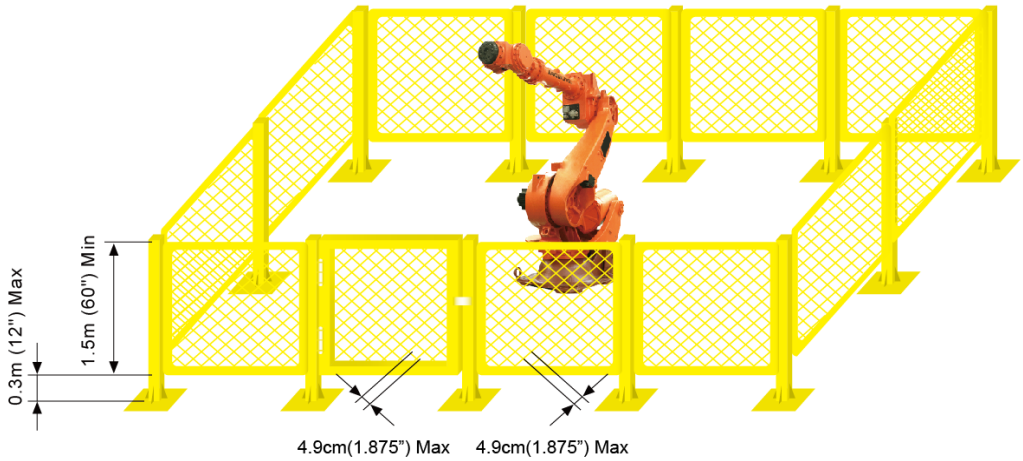

Figure 1.2 Recommended size for safety net and entrance gate (square type entrance gate)

(1) Enough space for safety net should be secured by covering robot operating area so as that workers would not have difficulty in teaching work or repairing work, and the safety net should have solid structure in order that it would not move easily and man cannot enter over easily.

(2) Safety net should be installed by static type in principle, and should not have hazardous parts such as prominence and depression or keen part, etc.

(3) Install the safety fence with an entrance gate, and register the safety plug at the gate so that it does not open unless pulling the plug out. Wiring should be carried out in a way that the robot should be in the operation ready OFF status as well as in the motor OFF status when the safety plug is pulled out or safety net is open.

(4) In order to operate the robot with the safety plug pulled out, wiring should be carried out in a way that will allow the playback to take place at a low speed.

(5) The emergency stop button should be installed at a place where it can be pushed quickly by the operator.

(6) If no safety net is to be installed, devices such as photoelectric switches, and mat switches, should be installed, instead of the safety plug, to cover the overall area within the robot's operation range in a way that the robot can be stopped automatically when a person enters the robot's operation range.

(7) Operation area of robot (hazardous area) should be distinguished by the method like painting on floor.

1.6.2. Placement of Robot & Peripheral Equipment

Please make sure that robot and peripheral equipment should be arranged by following method.

(1) In case of connecting primary power of controller or peripheral devices, please work after checking whether supply power has been deleted. There is a possible danger of electric shock because the high voltage such as 220V and 440V is used as its primary power.

(2) Post a sign [No enter during operation] up the safety fence gate, and inform the operators of its purport.

(3) Arrange such devices as controller, interlock panel, and other manipulation panels to be handled outside of the safety fence.

(4) When installing operation stand, install the emergency stop button on the stand. Make sure that stopping in an emergency situation can be initiated from any place from which the robot is operated.

(5) Make sure that the robot manipulator and the wiring and piping of controller, interlock panel, and timer should not be placed in the way of operator's working range so that they would not be directly stepped on by FORK and LIFT. Otherwise, the operator may suffer electrocution or the wire may suffer disconnection.

(6) Place the controller, interlock panel, and handling stand within the sight of robotic performance. It may cause a major accident to operate the robot while the robot is malfunctioning in an area where the robot's activity can not be observed, or while the operator is working on it.

(7) Restrict the robot's working envelope by using the soft limits and the mechanical stopper if the necessary working envelope is narrower than the robot's workable envelope. When the robot is to move beyond the restricted envelop due to abnormal operation, such as the robot being handled in a wrong way, the robot will be stopped automatically in advance thanks to the function that restricts the workable envelop.

(8) During the welding work, spatter could fall down to workers or the workers could be injured by burning, or fire could break out. Install such devices as a glare shield or a cover in the full sight of robot's working envelope.

(9) Make sure that the device indicating the robot's running condition, whether automatic

or manual mode, can be noticeable even from a slightly distant location. In the case of automatic start-up, a buzzer or a warning lamp will be useful.

(10) Make sure that there is no projecting part in the robot's peripheral equipment. Cover it, if necessary. It usually could cause an accident if the operator comes in touch with it. And it may cause a major accident when the operator tumbles while being astonished at the sudden movement of the robot.

(11) Don't make the system designed to allow the workers to carry the Work in and out using their hands through the safety fence. It could be a cause of accident associated with compressing or amputating.

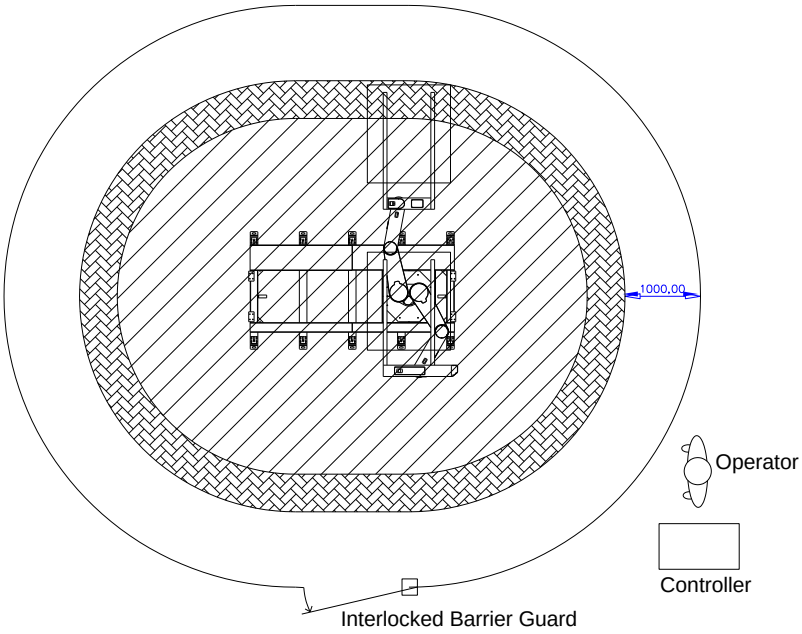

(Cylinder type)

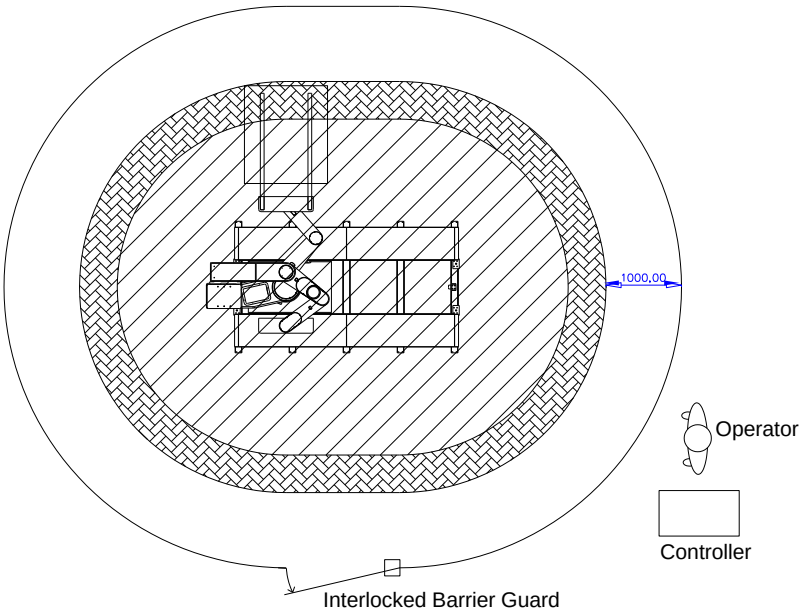

(Beam type)

Restricted space | Maximum space | Safeguarded space

Figure 1.3 Arrangement of LCD robot peripheral devices and workers

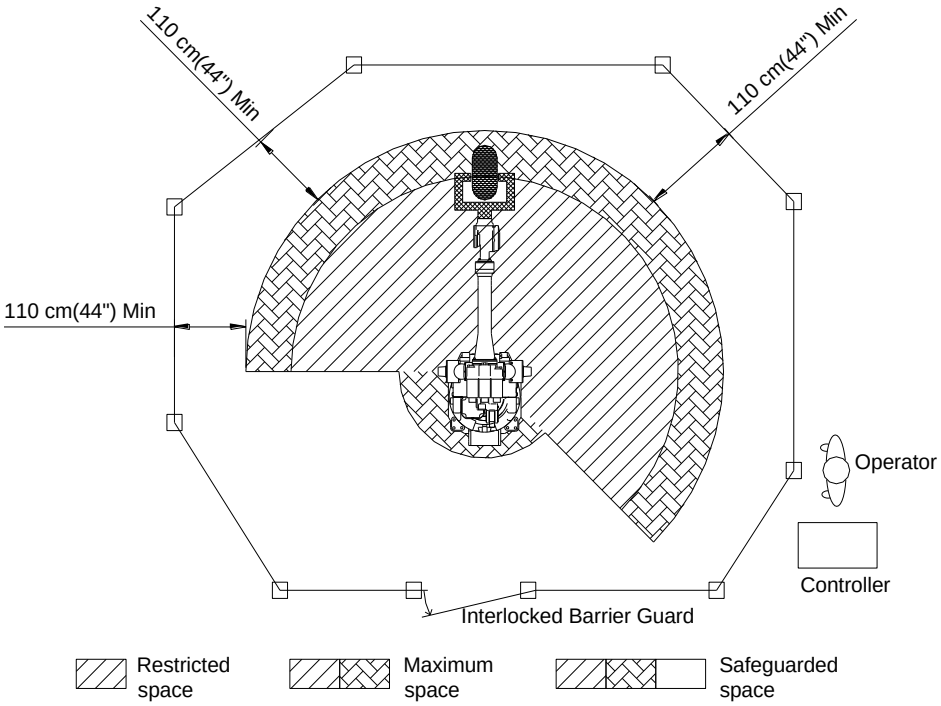

Figure 1.4 Arrangement of general robot peripheral devices and workers

1.6.3. Installing the Robot

Please install the robot in accordance with following method surely.

Install the robot as per the planning and layout which has been previously reviewed and studied for its optimized performance and functionality. In case of poor conditions for robot installation, the serious problems can take place, including error of relative position between robot and workpiece during operation, bad performance quality of robot caused by vibration, shortening lifetime, and cause of serious accidents. Thus, pay attention to the following precautions when installing the robot.

General Safety Precautions

(1) Design and install the robot system properly in compliance with laws, regulations, and safety requirements enable in the country where the robot system is installed.

(2) All the workers for the robot system must have the complete knowledge on the information specified in the application and supplementary manual, and proficiently operate and handle the industrial robot.

(3) Installation workers of robot must follow the safety instructions and apply them to the installation when they face any safety problems.

(4) System provider must ensure that all the circuits utilizing safety functions perfectly perform in a safe way.

(5) Install main power supply to be disconnected from outside of the robot's working envelope.

(6) System provider must ensure that all the circuits utilizing emergency stop function perfectly perform in a safe way.

(7) For the immediate emergency stop, install emergency stop button within the accessible distance for the operator.

Technical Safety Precautions

(1) Eliminate any interference with peripheral equipment considering the dimension and working envelope.

(2) Avoid such place for installing which is directly exposed to the sun, extremely humid, contaminated by oil or chemicals, and containing a large amount of metal powder and explosive gas.

(3) Install at the ambient temperature ranged 0~45℃.

(4) Secure sufficient space for the easier disassembly and maintenance.

(5) Install safety fence with a gate, and prohibit any person from entering the robot's working envelope.

(6) Remove any obstacles out of the robot's working envelope.

(7) Take a special measure, considering thermodynamics of controller, if the robot is installed near the heating elements or places exposed directly to the sun.

(8) Take a special measure if the robot is installed in a place of abundant dust such as metal powder in the air.

(9) Install the robot not to transmit welding electric current. In other word, insulate SPOT GUN with/from the robot's wrist.

(10) Grounding is very critical in preventing electric shock and malfunction caused by noise, and thus install as following instructions.

① Install an exclusive grounding terminal using class 3 or higher. (For the input voltage of 400V of higher, use special class 3 or higher.)

② Connect grounding line into the grounding bus-bar inside of the control panel.

③ In case of direct grounding on the floor by anchoring, two-point grounding both by robot manipulator and by controller can produce a "ground loop" and contrariwise cause abnormal operation. In this case, connect the grounding line to the base of robot manipulator and disconnect the second grounding point to the controller. If the robot vibrates even after stopping, double-check the grounding status because the possible main causes could be an incomplete grounding or "ground loop".

④ In the use of internal transgun(GUN), there is a possible danger of dropping because the primary power cable is directly connected to the spot gun. In this case, directly connect the grounding line to the base of robot manipulator in order to prevent any electric shock and protect the control panel, but do not connect it to the controller.

1.6.4. Space for Robot Installation

Install robot after securing sufficient space for maintaining the robot manipulator, controller, and other peripheral equipment. to install the main body and controller, please secure the above mentioned installation area. Install controller outside of the safety fence in order to monitor the robot manipulator and to operate in a safe way.
When installing, be sure to make it easier to perform the maintenance when opening the Controller door. Secure the available space. The specifications of the controller can change according to the type of the controller. (For more details, please refer to the "Maintenance manual".)

1.7. Safety Operation for Robot Handling

Follow the safety instructions to prevent any accidents. Don't modify nor ignore safety devices or circuits at any time, and be careful of electric shock.
All the normal operations in an automatic mode must be performed outside of the safety fence.
Check the robot's working envelope if anyone is inside before operating.

1.7.1. Safety Precautions for Robot Handling

Please observe following countermeasures because safety is very important for the test operation of the robot.

(1) Do not handle the robot other than such personnel as operators handling the robot and other possible operators and supervisors who were designated as whom duly trained in an approved robotic training course and become familiar enough with the proper operation of the safety and robotic functions.

(2) Be sure to wear helmets, goggles, and safety shoes.

(3) Perform the work in pairs. One person must be ready to press the emergency stop button in an emergency while the other must perform his work quickly but carefully within the robot's working envelope. Always check the escape route before working.

(4) Make sure that there is no one in the working envelope when the power source is on.

(5) Operations such as teaching must be performed outside of the robot's working envelope. However, if the operation is performed within the working envelope after stopping the robot, enter the envelope with safety plug or key switch for converting to automatic mode. Make sure that other operators do not change it into automatic mode by accident. Also, pay close attention to the specific direction of robotic movement in case of abnormal operation and malfunction.

(6) Supervisors should follow the instructions below.
① Be located at a place where you could take an entire view of robot, and commit yourself to monitoring.
② Press the emergency stop button immediately when abnormality is found.
③ Anyone is forbidden to be near the operating area other than those who are engaged in the operation.

(7) In a manual mode, the speed of teaching is limited to 250mm/sec.

(8) In teaching, post a sign [Under Teaching].

(9) Operators must pull the safety plug out, and enter the safety fence with the plug.

(10) Do not use any devices causing noise in and around the teaching area.

(11) Handle the teach pendant button, while checking the teaching point with your naked eyes, and do not handle it just relying on your sense.

(12) It is a repairing part to be prepared for when you buy many sets.

(13) In teaching, check and examine carefully under your feet. In particular, in high teaching for more than 2M, secure a safe zone on which you may step before teaching.

(14) Instructions for any abnormal operations.

① Press immediately the emergency stop button when any abnormal operations are found.

② Be sure to check if the relevant equipment is stopped when checking the abnormality in an emergency stop.

③ In case that the robot stops automatically due to power failure, investigate possible causes and take actions after confirming that the robot completely stops.

④ In case of malfunction of emergency stop devices, immediately disconnect the main power and investigate possible causes to take necessary actions.

⑤ Investigation of the failure must be conducted only by a designated person. For the re-operation after emergency stop, operators must clarify the cause of failure and take necessary actions, and then operate the robot again following the proper procedure.

(15) Write out the operating rules proper to working details and installing location regarding the operation and handling method for the robot, and the necessary actions for robot's any failure. In addition, it is recommended to operate the robot in accordance with the operating rules.

(16) Instructions when the robot stops

Make sure not to approach the robot even when it seems to be stopped. Most accidents occur from a sudden movement of robot which seemed to be stopped when one approaches it. The conditions that the robot stops are as follows.

Table 1-2 State of Robot Stop

No.	State of Robot	Drive Power	Access
1	Pause (Minor failure, Pause switch)	ON	X
2	Emergency stop (Major failure, Emergency stop switch, Safety gate)	OFF	O
3	Input signal standby of peripheral equipment (START INTERLOCK)	ON	X
4	Playback Completion	ON	X
5	Standby	ON	X

Even in the accessible state of robot, be watchful against any possible sudden movement of robot. Make sure to avoid approaching the robot without precautions for emergency under all circumstances.

- **During temporary halt, the entrance countermeasure same as entrance of teaching work should be considered at the case (nozzle contact, welded part detected, arc error, and so on) of opening entrance gate for simple management against error.**

(17) Clean up any split oil, tools, and impurities in the safety fence after completing robotic operation. Accidents such as conduction may occur in the working envelope contaminated by oil, or scattered tools on its floor. Make a habit of organizing and cleaning things up.

1.7.2. Safety Precautions for Operating Test

Please observe following countermeasures because safety on robot operation is very important.

In case of operating test, errors in design or teaching and inferiority in manufacturing are possibly seen in the entire system such as teaching program, jig, and sequence. Thus, be more careful and safe in case of operating test. Accidents may occur by these combined causes.

(1) Before handling, check the stop buttons and signal functions to stop the robot such as emergency stop button or stop button. And then, check the abnormality - detective movements. Above all, it is the most critical to check all the stop signals. It would be the most important to stop the robot when any possible accidents are predicted.

(2) In case of operating test, start the robot at low speed(approximately 20%~30%) in the variable speed function, and repeat it more than one cycle to check the movements. If any errors are found, immediately correct them. After then, increase in speed (50% → 75% → 100%) gradually, and repeat more than one cycle respectively to check the movements. Operating at high speed from the very beginning may cause a serious accident.

(3) In case of operating test, it is hard to predict what problems would happen. Do not enter the safety fence during operating test. Unexpected accidents are likely to occur because of its low reliability.

1.7.3. Safety Precautions for Automatic Operation

Please observe following countermeasures because safety on robot automatic operation is very important.

(1) While posting a sign [Do Not Enter During Operation] up the safety fence gate, ask the operators not to enter during operation. If the robot stops, you may enter the safety fence under your full understanding of the situation.

(2) Be sure to check if any operators are inside of the safety fence when starting the automatic operation. Operating without checking the presence of operators may cause a personal injury.

(3) Before starting the automatic operation, check and confirm that the program number, step number, mode, and starting selection are in the possible state for automatic operation. If starting with the other programs or steps selected, the robot could move in an unpredicted way, and lead to an accident.

(4) Before starting the automatic operation, check if the robot is properly located to get started. Check whether the program number or step number is identical with the location of robot. Even if it's all identical, accidents are still possible to occur due to an abnormal movement when the robot is differently located.

(5) Be prepared to immediately press the emergency stop button when starting the automatic operation. Immediately press the emergency stop button in case of robot's unexpected movements or emergency.

(6) Be sure to detect any abnormalities by checking the route, condition, or sound of robot movement. Sometimes the robot may be abnormally operated including a sudden break down. However, it will show a certain indication before the break down. Understand the robot's normal condition well in order to catch the symptom in advance.

(7) When any abnormality is detected from the robot, immediately stop and take proper actions on it. Using the robot before any proper actions taken may cause an interruption of produce as well as serious failure leading to a very serious personal injury.

(8) When checking the robot's movement after the proper actions taken for the abnormality, do not operate the robot with operators inside of the safety fence. Unexpected accidents are possibly to occur because its low reliability may cause another abnormality.

1.8. Safety Precautions for Access to Safety Fence

Please observe following countermeasures because safety on robot automatic operation is very important.

The robot is very heavy and strong, even at low speeds. When entering the safety fence, one must observe the relevant safety regulations of its pertinent country.
The operators always must be aware of the unexpected movements of robot. Robots are able to move fast shortly after being stopped. The operators should know that the robot is able to move in a different route, without any notice, by means of external signals. Thus, when trying to stop the robot during teaching or operating test, one should be able to stop the robot with a teach pendant or control panel.

When entering the working envelope through the safety gate, you must take the teach pendant with yourself so that other people can not operate the robot. Make sure to post up the control panel a sign indicating the state of robot handling.

People must understand the followings when they are to enter the robot's working envelope

(1) Do not enter the working envelope other than teaching person.

(2) Operation set-up mode of controller must be a manual mode in the control panel.

(3) Always wear the approved working suite.(Do not wear a loose clothes as you please)

(4) Do not wear gloves when handling controller.

(5) Do not leave innerwear such as underwear, shirts, or necktie out of the working suite.

(6) Do not wear personal accessories such as big earrings, rings, or necklaces.

(7) Make sure to wear safety shoes, helmet, and goggles and if necessary, wear other self-protective outfit such as safety gloves.

(8) Make sure that the emergency stop circuit is working correctly and in its proper function, turns MOTOR OFF when pressing the emergency stop button in the control panel and teach pendant before handling the robot.

(9) Make your posture face-to-face with the robot manipulator when performing your work.

(10) Follow the predetermined working procedure.

(11) Be prepared for emergency exit or safe place considering that the robot may unexpectedly rush at you.

1.9. Safety Precautions for Maintenance and Repair

1.9.1. Safety Precautions for Controller Maintenance and Repair

Please observe following safety countermeasures on repair and check for robot controller.

(1) Maintenance and repair of the robot must be performed by the personnel who was duly trained in the special maintenance training course and has a good knowledge of maintenance.

(2) Perform your work following the maintenance procedures for controller.

(3) Perform your maintenance and repair in a safe way by securing emergency exit or safe place.

(4) Before the daily maintenance, repair, or changing parts, be sure to power down. In addition, post a warning sign [Do Not Input Power] up the primary power so that other operators may not input power by accident.

(5) When changing parts, be sure to use the specified ones.

(6) When you open the door of controller, you should turn off power, and please start working after 3 minutes.

(7) If sufficient illuminance is not secured when you perform maintenance and inspection inside the controller, you should use external lights.

(8) Please do not touch heat radiating plate of servo AMP and recovery resistance because they are very hot.

(9) After completing maintenance, be sure to close the door completely after checking if tools or other things are still remained in the controller.

1.9.2. Safety Precautions for Robot System & Manipulator Maintenance

Please observe following safety countermeasures on repair and check for robot controller.

(1) Refer to the safety precautions for Controller maintenance and repair.

(2) Perform your maintenance and repair for the robot system and manipulator, following the indicated procedures.

(3) Be sure to disconnect the primary power of controller. Post the warning sign [Do not input power] up the primary power to prevent other workers from connecting the power.

(4) Make sure that the Arm is fixed and immovable before maintenance and repair since dropping or moving of the robot's Arm may cause a danger during maintenance and repair. (Refer to the 『Robot manipulator maintenance manual』.)

1.9.3. Necessary Actions after Maintenance and Repair

Please install the robot in accordance with following method surely.

(1) Check if the cables or parts of controller are properly connected.

(2) After maintenance is completed, carefully check that no tools are left around or inside of the controller and manipulator. Make sure that the door is firmly closed.

(3) Do not turn on the power if any problems or critical failures are detected.

(4) Be sure that there is no one within the working envelope, and that you are in a safe place before turning on the power.

(5) Turn on the main circuit breaker on the control panel.

(6) Check the current position and status of robot.

(7) Operate the manipulator at low speed.

1.10. Safety Functions

1.10.1. Operating a Safety Circuit

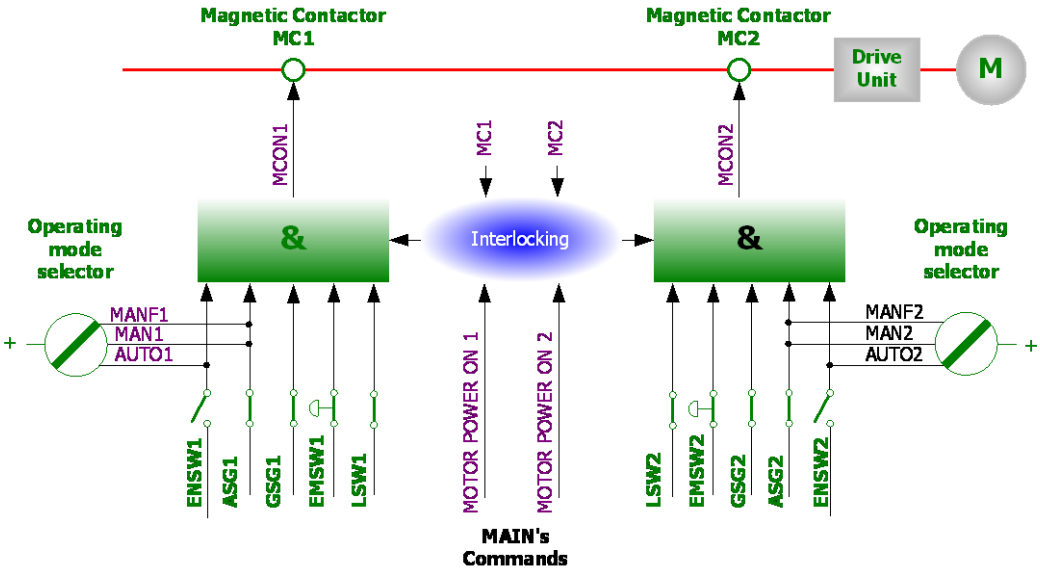

Figure 1.5 Configuration for safety chain

The robot's safety system is based on a two-channel safety circuit that is continuously monitored. If an error is detected, the power supply to the motors is disconnected and the motor brake is applied. To return the robot to MOTOR ON mode, the switches of two-channel circuit must be connected. If one of the two-channel circuit switches shorts, the contactor of motor will be disconnected leading to the application of brake, and finally the robot will be stopped. Furthermore, when safety circuit is disconnected, the interrupting call will be sent automatically to the controller to find out the possible reason for the interruption.

The safety control circuit of operation is based on dual safety electric circuit in which the controller and MOTOR ON mode are operated interactively. In order to be in MOTOR ON mode, the safety circuit consisted of several switches must be all connected. MOTOR ON mode indicates that drive power is supplied to the motors. If one of the contactors is disconnected, the robot will always return to MOTOR OFF mode.

MOTOR OFF mode indicates that drive power is removed from the robot's motors and the brakes are applied. The status of the switches is displayed on the teach pendant. (Refer to the I/O monitoring screen of "SERVICE" menu, 『Operation manual』.)

Safety circuit

The emergency stop buttons on the controller panel and on the teach pendant and external emergency stop buttons are included in the safety circuit of operation. Users may install the safety devices (safety plug, safety stop device for safe place) which are operated in the AUTO mode. In a manual mode, the signals of these safety devices are ignored. You can connect the general safety stop devices that is active in all operating modes. No one can enter the working envelope in an automatic operation mode due to the unconditional operation of the safety devices (door, safety mat, safety plug etc.). These signals are also generated in a manual mode, but the controller will keep the robot operating while ignoring the robot's teaching. In this case, maximum speed of robot is restricted to 250mm/s. Thus, the purpose of this safety stop function is to secure the safe area around the manipulator while one approaches the robot for maintenance and teaching.

When the robot is stopped with the limit switch, change the robot's position by operating it with the pendant key at the constant setting mode. (Constant setting mode refers to the state of entry into the menu『[F2]: System』menu)

The safety circuits must never be by-passed, modified or changed in any way.

1.10.2. Emergency stop

An emergency stop should be activated when people or equipment is located at the dangerous area. The emergency stop buttons are located both on the control panel and on the teach pendant.
All safety control devices such as emergency stop buttons on the control panel must be located outside the working envelope and easily accessible at any time.

Status of Emergency stop

When the button is pressed, the robot will operate as follows.
Robot stops immediately in any cases.

- Disconnect the servo system power.
- Motor brake is activated.
- Emergency stop message is displayed on screen.

For the emergency stop, the following two methods can operated simultaneously.

(1) Emergency stop for control panel and teach pendant (Basic)

Above the control and teach pendant console.

(2) Emergency stop of external system

External emergency stop device (button etc.) can be connected to the safety electric circuit in accordance with applied standard for the emergency stop circuit.
(Please refer to system board in "basic configuration of controller") At this time, the emergency stop must be connected to be "Normal On" and it must be check for proper operation during test run.

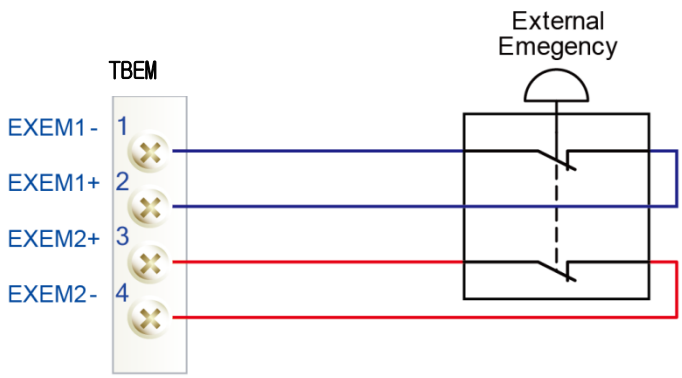

Figure 1.6 Connection with external emergency halt switch through system board terminal block TBEM

1.10.3. Operating Speed

To teach the robot, the operating mode switch must be in a MANUAL mode. Then the maximum speed of robot is limited to 250mm/s.

1.10.4. Connecting the Safety Devices

External safety devices such as light beams, light curtains, safety plug, and safety mats which can be adapted by the system builder execute interlocking the controller by way of connecting with safety circuit within the controller. These devices are used for safety device during execution of normal program in an automatic mode.

1.10.5. Restricting the working Envelope

When the robot is not necessary to reach certain area for specific applications, working envelope of the robot can be limited to secure the sufficient safety working area. This will reduce the damage or loss in case of robot's collision with external safety devices such as safety fence, etc. The movement of axes 1, 2, and 3 of HR, HX, HS and HA can be limited by means of mechanical stopper or electrical limit switches. In this case, the corresponding software limitation parameters must be also changed. If necessary, movement of wrist 3 axes can be restricted, too. Limitation of working envelope for all the axes could be carried out by the user. The robot is delivered to customer as the status of full working envelope setting.

- **Manual mode: Maximum speed is 250mm/s.**
  In a manual mode, by means of worker's selection, workers may enter the safeguard area.

- **Auto mode : The robot can be operated via remote controller.**
  All safety devices such as safety door, safety mats, etc. are activated.
  No one may enter the safety device area of robot.

1.10.6. Monitoring Function

(1) Motor monitoring function
Motors are protected against overload by means of onboard sensors.

(2) Voltage Monitoring Function
For the protection of, the servo amp module turns off the power switch when the voltage is too low or too high.

1.11. Safety Related to End Effectors

1.11.1. Gripper

(1) When a gripper is used to grip a workpiece, there should be safety precautions for unexpected dropping of the loaded workpiece.

(2) When any end effectors or devices are installed on the robot arm, use the required size and piece of bolt, and securely fasten as per the required torque using torque wrench. Do not use the bolt which has rust or dirt on its surface.

(3) End effector must be designed and manufactured not to exceed the maximum allowable load at the wrist of robot. Even though power or air supply stops, the gripped workpiece must not be dropped from the gripper. In order to remove any risks and problems which may cause personal injury and/or physical damage, the sharp edge and projecting part of end effector must be made dull and smooth.

1.11.2. Tool / Workpiece

(1) It must be possible to replace tools such as milling cutters in a safe manner. Make sure that safety devices are working correctly until the cutters stop rotating.

(2) Tool must be designed to keep in gripping workpiece securely even though a power failure or a control failure takes place. It must be possible to release workpiece from the gripper in a manual mode.

1.11.3. Pneumatic and Hydraulic Systems

(1) The special safety regulations will apply to pneumatic and hydraulic systems.

(2) Since residual energy of pneumatic and hydraulic systems can be still remaining even after the robot stops, particular care and attention must be paid by users. Internal pressure of equipment must be removed whenever starting the repair work for pneumatic and hydraulic systems.

1.12. Liabilities

The robot system has been built in accordance with the latest technical standards and approved safety rules. Nevertheless, the serious accidents such as death or personal injury still may take place due to the collision between the robot system and peripheral equipment.

The robot system must be used by operator who has a full technical knowledge on its designated use and also pay his close attention to the possible dangers and risks involved in its operation. The use of robot system is subject to compliance with these operating instructions and the operation and maintenance manual supplied together with the robot system. The safety related functions of robot system must not be used for any purposes other than safety.

When you use the robot system for any other or additional purposes than its designated usage, you must review whether it is enable in accordance with design criteria. The manufacturers cannot take any responsibility for any damage or loss which resulted from such misuse or improper use. The users shall have the full responsibility for the risks caused by such misuse or improper use. When you use and operate the robot system for its designated use, you must have a good command of all the information contained at these operating instructions as well as the maintenance manual.

The robot system may not be put into operation until it is ensured that the functional machine or plant into which the robot system has been integrated conforms to the specifications of the EU Machinery Directive 98/37/EC(2006/42/EC) and US OSHA.

The following harmonized standards in particular were taken into account with regard to the safety of the robot system.

- ANSI/RIA R15.06-1999
  Industrial Robots and Robot Systems - Safety Requirements
- ANSI/RIA/ISO 10218-1-2007
  Robots for Industrial Environment - Safety Requirements - Part 1 - Robot
- ISO 11161:2007
  Safety of machinery - Integrated manufacturing systems - Basic requirements
- EN ISO 13849-1:2008
  Safety of machinery - Safety-related parts of control systems - Part 1: General principles for design (ISO 13849-1:2006)
- EN 60204-1:2006
  Safety of machinery - Electrical equipment of machines - Part 1: General requirements (IEC 60204-1:2005 (Modified))
- EN ISO 10218-1:2006
  Robots for industrial environments - Safety requirements - Part 1: Robot (ISO 10218-1:2006)

Users must take the full responsibility for any accident caused by their negligence or non-observance of these instructions. The manufacturer will not take any liabilities and responsibilities for any damages or losses caused by the misuse or malfunction of such equipment which is not included in the contract between manufacturer and user and provided by user, or such equipment which is installed around the robot system arbitrarily by the user. User must take the full liabilities and responsibilities for any risks and damages caused by such equipment.

2

Specifications

2.1. Format for the Robot Mechanical Part

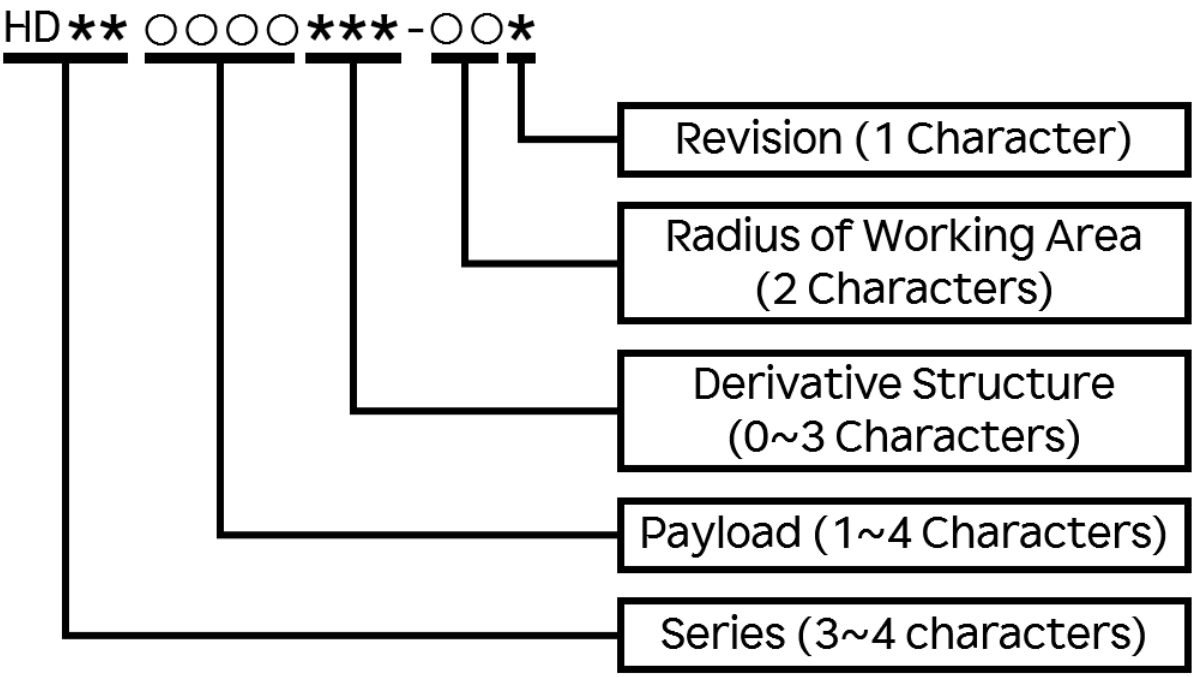

Figure 2.1 Format for the Robot Mechanical Part

2.2. Location of the Robot Nameplate

The robot type, serial number, and manufacturing date are written down in the nameplate. The nameplate is located on the bottom (left or right) of the manipulator, as shown in the picture below.

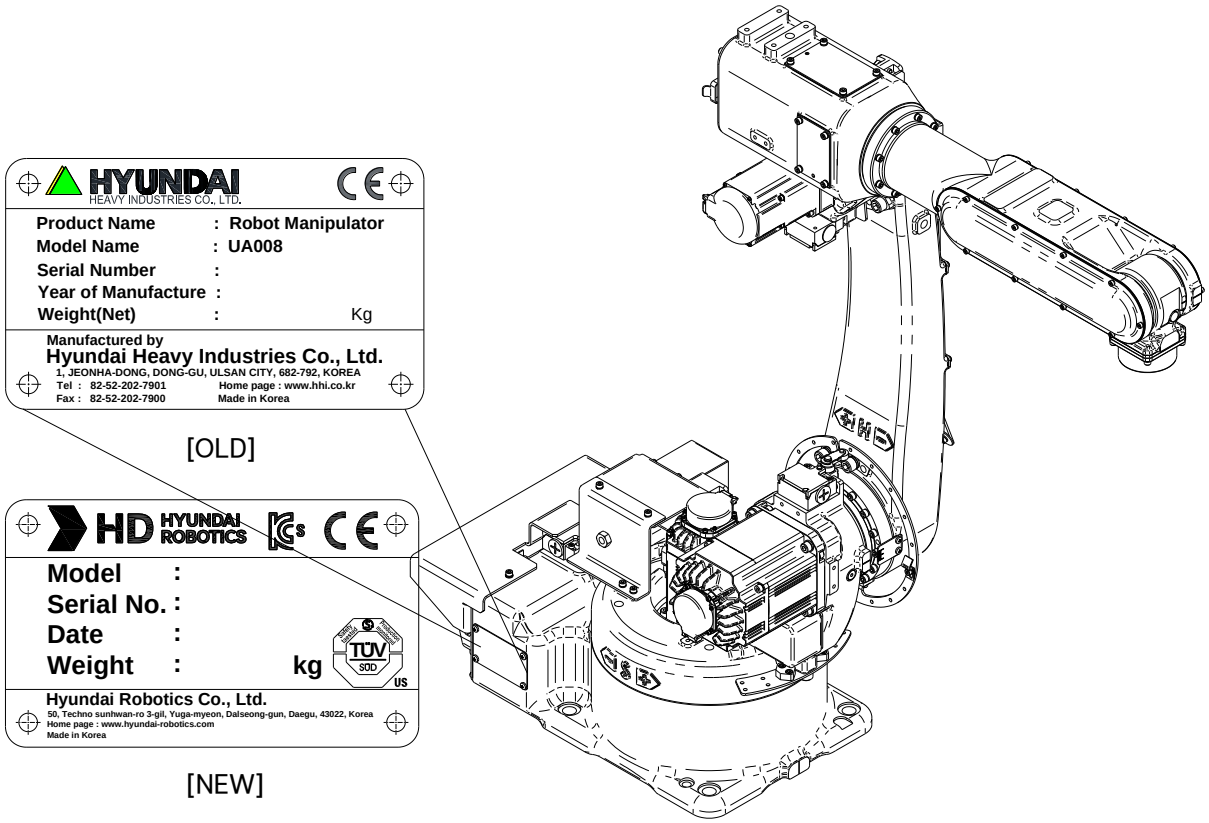

Figure 2.2 The Attachment Location of the Robot Nameplate (HDR8-14/HDR12-14)

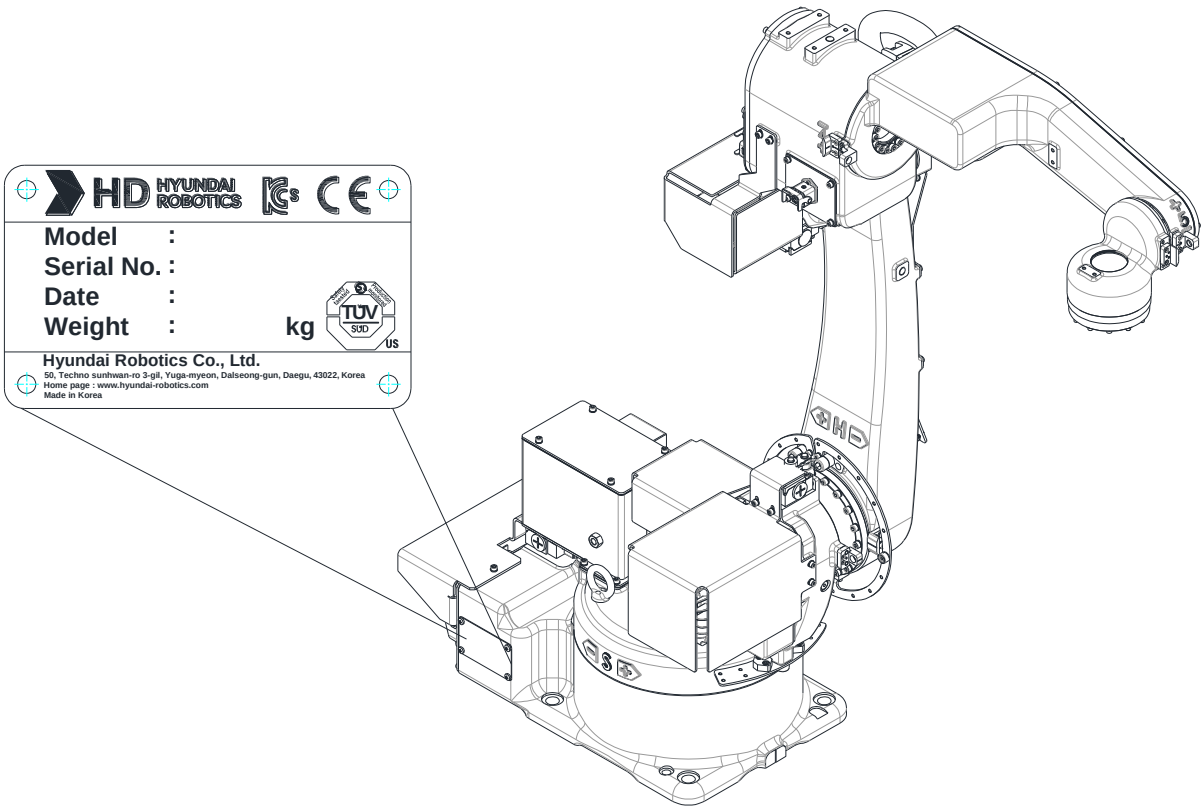

Figure 2.3 The Attachment Location of the Robot Nameplate (HDR12H-14)

2.3. Basic Specifications

Table 2-1 Basic Specification for Each Model

Item				Specifications		
Robot Model				HDR8-14	HDR12-14	HDR12H-14
Structure				Articulated		
Degree of freedom				6 (6 axes: S, H, V, R2, B, and R1)		
Drive method				AC servo method		
Max. work envelope	Main axis	S	Swivel	±3.00 rad (±172°)		
		H	For/Backward	+3.14 rad – -1.33 rad (+180° – -76°)		
		V	Up/Downward	+3.14 rad – -1.43 rad (+180° – -82°)		
		H/V	Interference	+0.14 rad – 4.71 rad (+8° – +270°)		
	Wrist axis	R2	Rotation 2	±3.18 rad (±182°)		
		B	Bending	±2.36 rad (±135°)		
		R1	Rotation 1	±6.28 rad (±360°)		
Maximum speed	Main axis	S	Swivel	4.01 rad/s (230°/s)		
		H	For/Backward	4.01 rad/s (230°/s)		
		V	Up/Downward	4.01 rad/s (230°/s)		
	Wrist axis	R2	Rotation 2	7.50 rad/s (430°/s)	6.11 rad/s (350°/s)	7.50 rad/s (430°/s)
		B	Bending	7.50 rad/s (430°/s)	6.46 rad/s (370°/s)	7.50 rad/s (430°/s)
		R1	Rotation 1	11.17 rad/s (640°/s)		
Payload				8 kg	12 kg	
Wrist torque		R2	Rotation 2	17.6 N·m (1.8 kgf·m)	22.0 N·m (2.24 kgf·m)	

Item			Specifications		
Robot Model			HDR8-14	HDR12-14	HDR12H-14
	B	Bending	17.6 N·m (1.8 kgf·m)	22.0 N·m (2.24 kgf·m)	
	R1	Rotation 1	7.8 N·m (0.8 kgf·m)	9.8 N·m (1.0 kgf·m)	
Accuracy of position repeatability[NOTE 1]			±0.05 mm		
Ambient temperature			0 – 45 ℃ (273 – 318 K)		
Relative humidity			20 – 85 %RH		
Manipulator's weight			136 kg		159kg
Cross-sectional area of the work envelope			3.68 m		3.72 m^2

[NOTE 1] Conforms to ISO 9283.

2.4. External Dimensions of the Manipulator and the Work Envelope

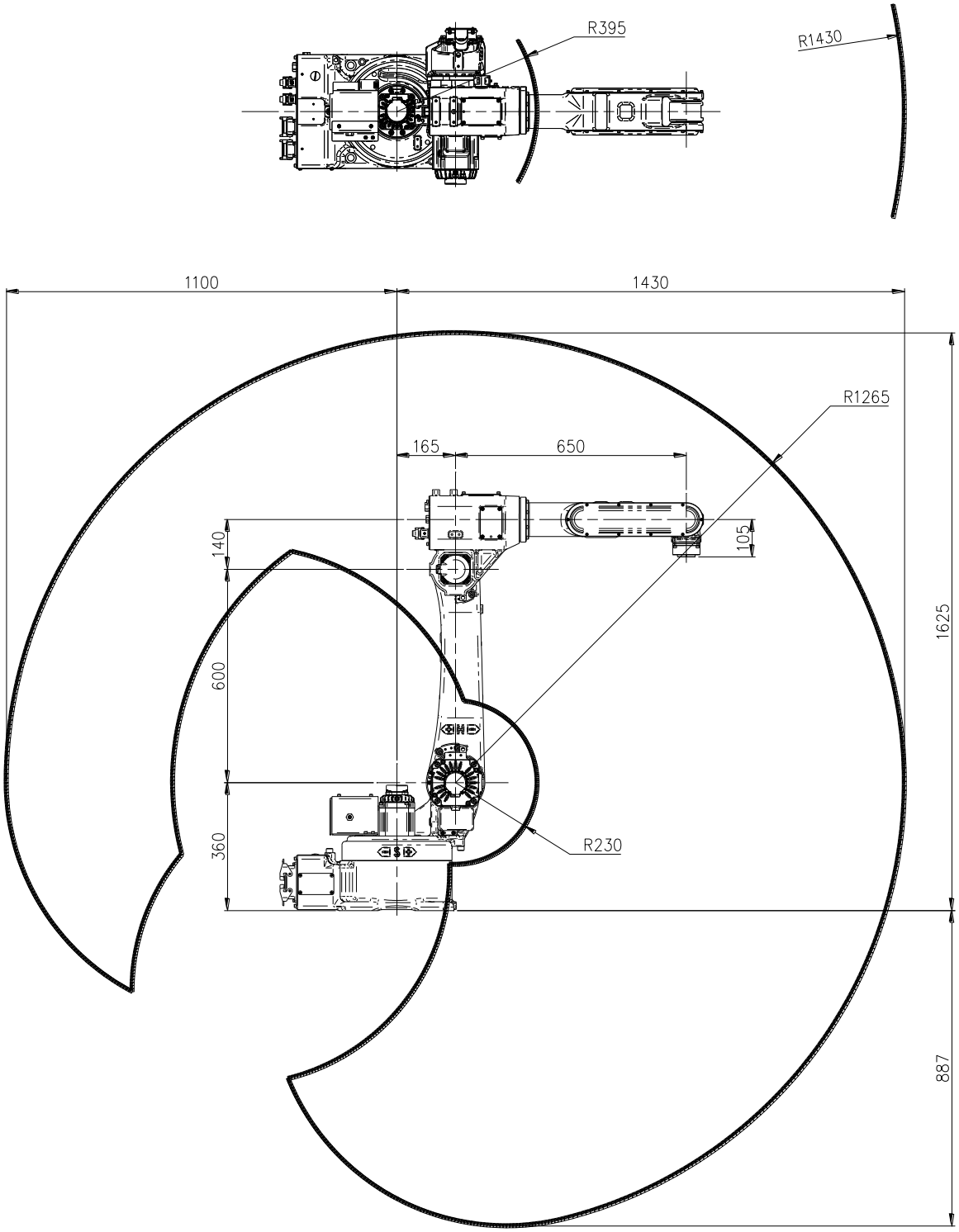

Figure 2.4 External Dimensions of the Manipulator and the Work Envelope (HDR8-14/HDR12-

14)

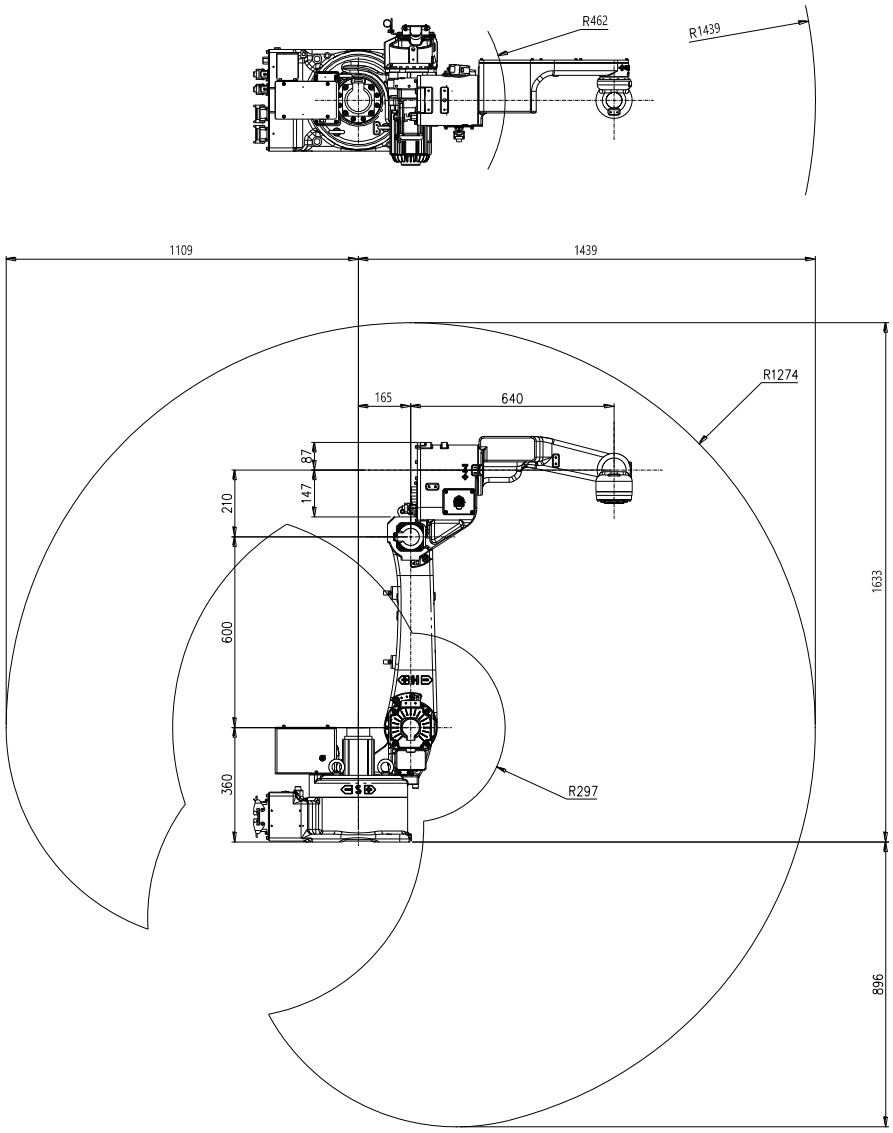

Figure 2.5 External Dimensions of the Manipulator and the Work Envelope (HDR12H-14)

2.5. Names of operating axes

Table 2-2 Rotational Direction of Each Axis

Axis name	Operation	Button on the Teach Pendant	
S	Swivel	X+(S+)	X-(S-)
H	Forward and backward	Y+(H+)	Y-(H-)
V	Upward and downward	Z+(V+)	Z-(V-)
R2	Rotation 2	RX+(R2+)	RX-(R2-)
B	Bending	RY+(B+)	RY-(B-)
R1	Rotation 1	RZ+(R1+)	RZ-(R1-)

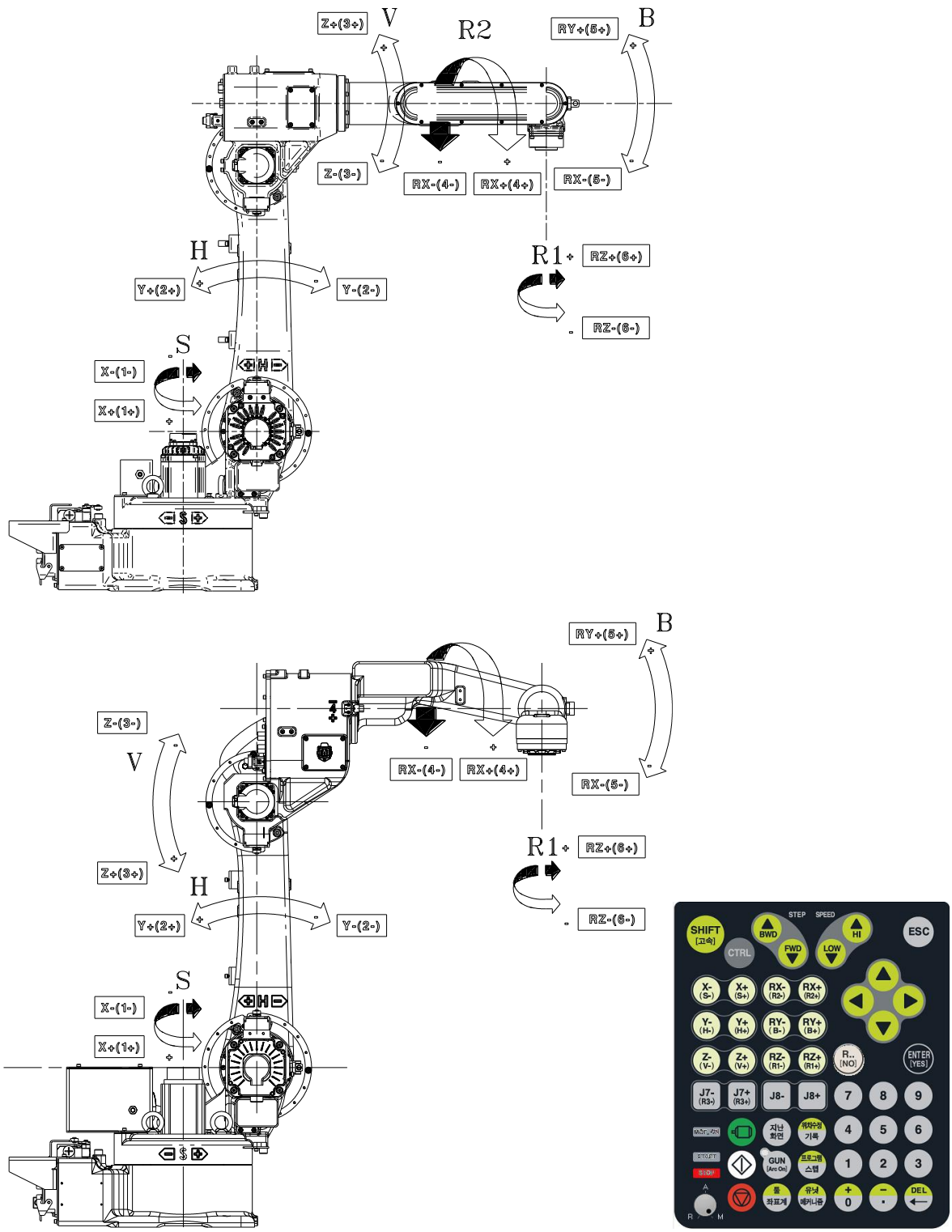

Figure 2.6 Appearance of the Manipulator and the Operation Axes
(up)HDR8-14/HDR12-14 (down)HDR12H-14

2.6. Detailed Diagram of the Wrist Axis Attachment Surface

When attaching a work tool to the flange at the tip of the wrist axis, use the relevant bolts for each model.

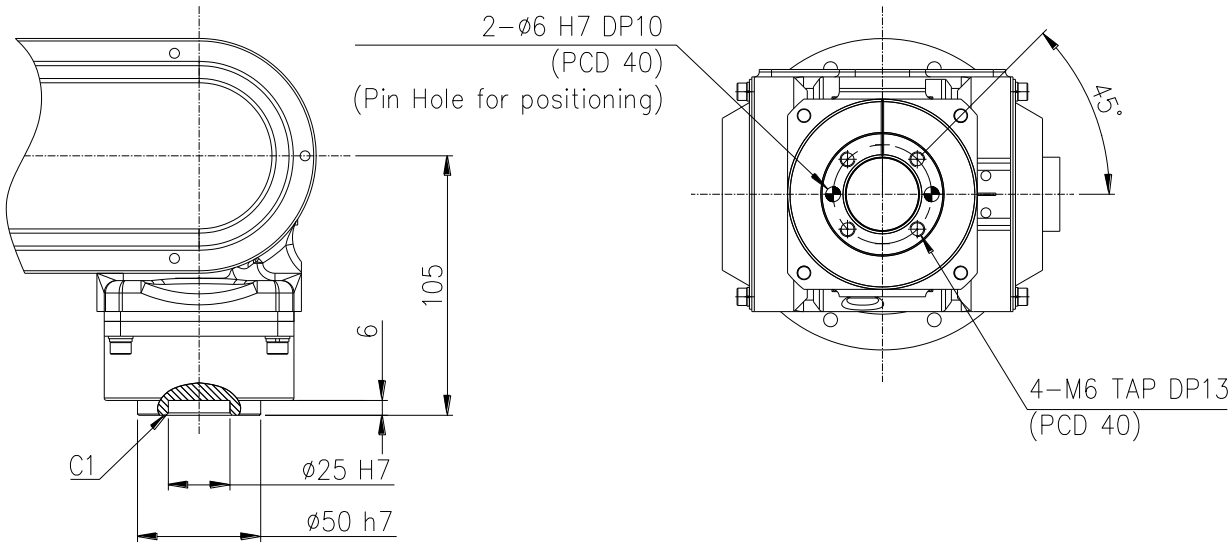

Figure 2.7 Details of the Wrist Axis Attachment Surface (HDR8-14/HDR12-14)

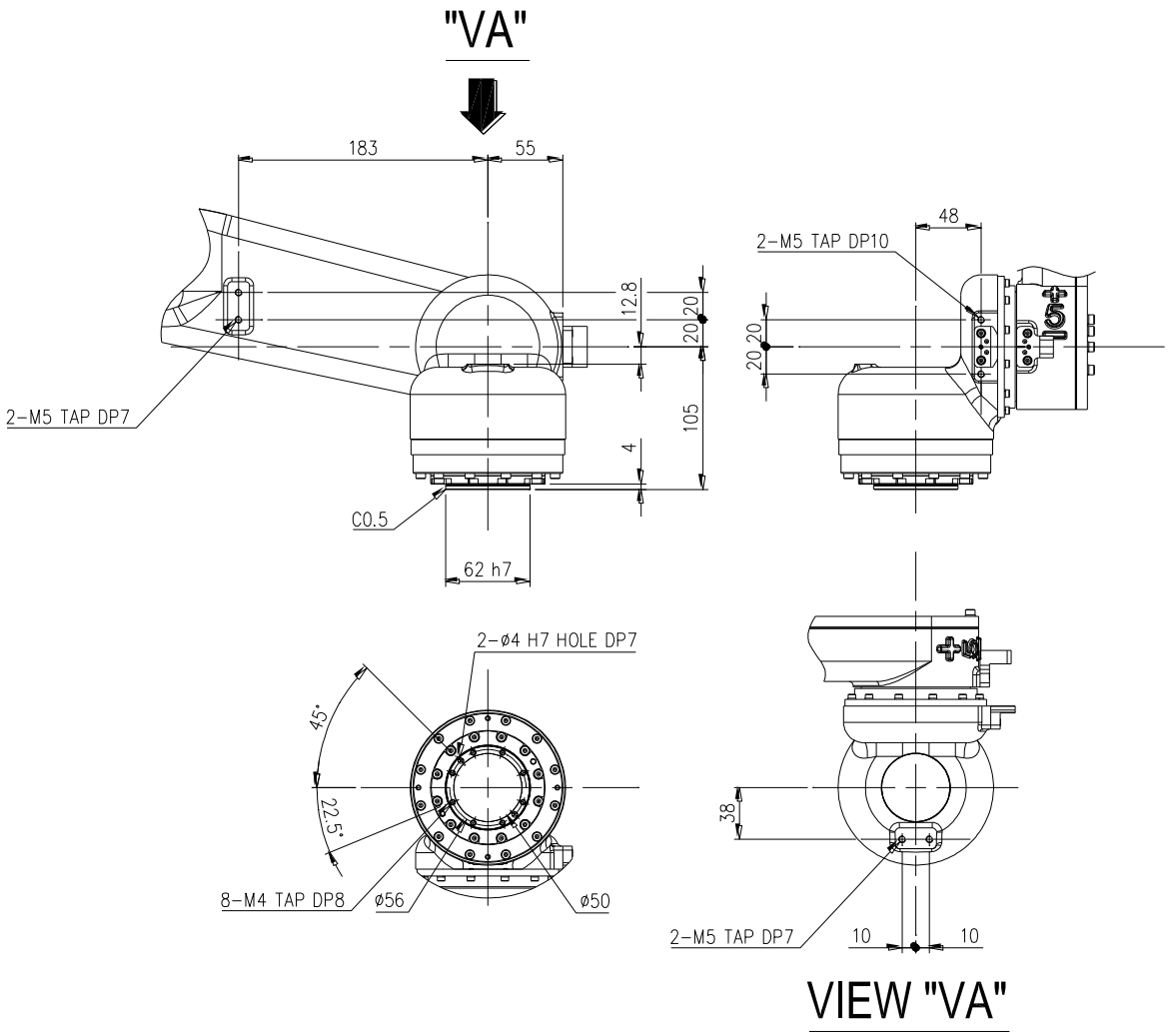

Figure 2.8 Details of the Wrist Axis Attachment Surface (HDR12H-14)

2.7. Detailed Diagram of Arm 1 Top Attachment Surface

A tap for attaching a peripheral device is machined on top of the robot's Arm 1.
For use in arc welding, the wire feeder should be installed on the top of Arm 1.

- Maximum load on A1 Frame: 10 kg

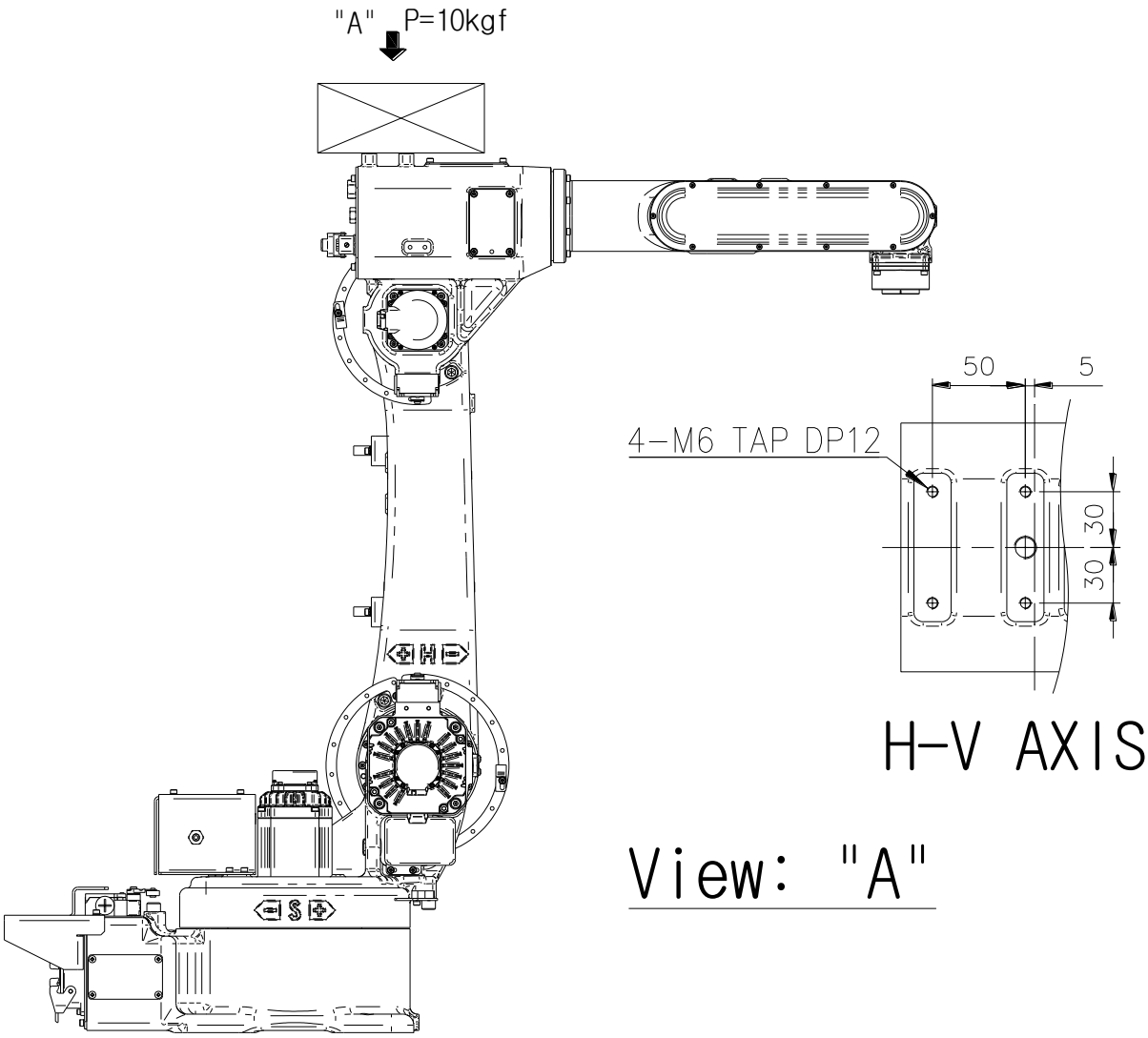

Figure 2.9 Detailed Diagram of Arm 1 Top Attachment Surface (HDR8-14/UA012)

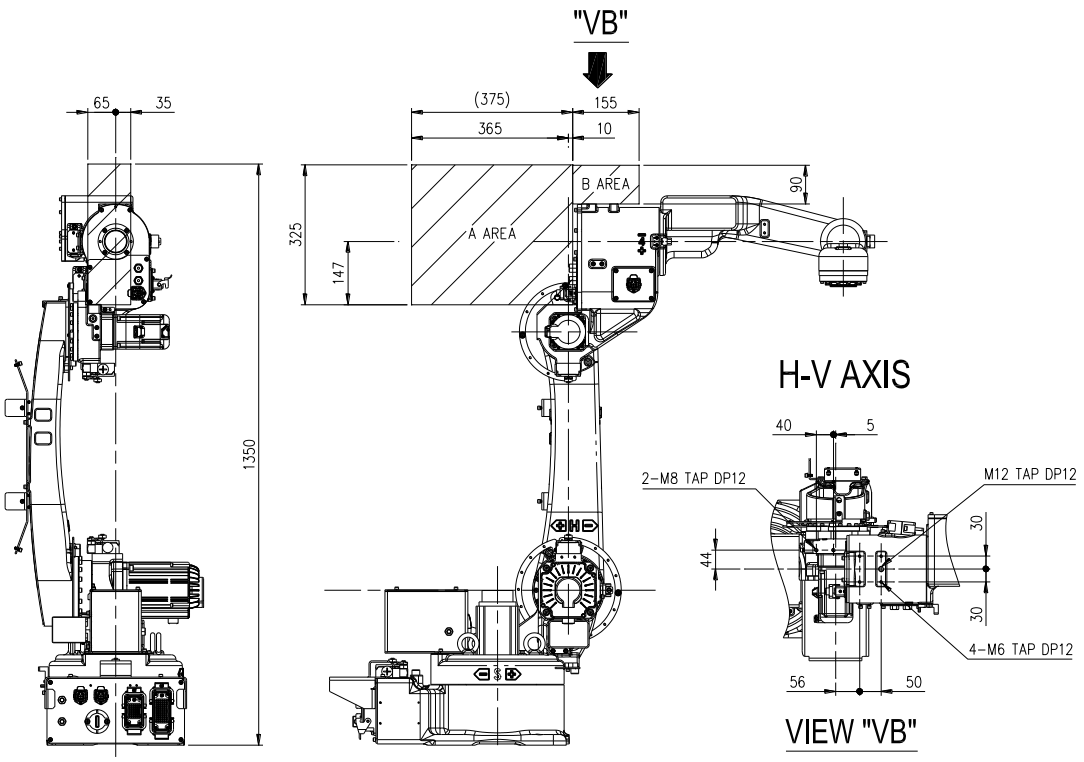

Figure 2.10 Detailed Diagram of Arm 1 Top Attachment Surface (HDR12H-14)

2.8. Wiring and Piping Diagrams for Applications

There are connectors and an air unit for connecting additional devices.
The following pictures show the user application connectors.

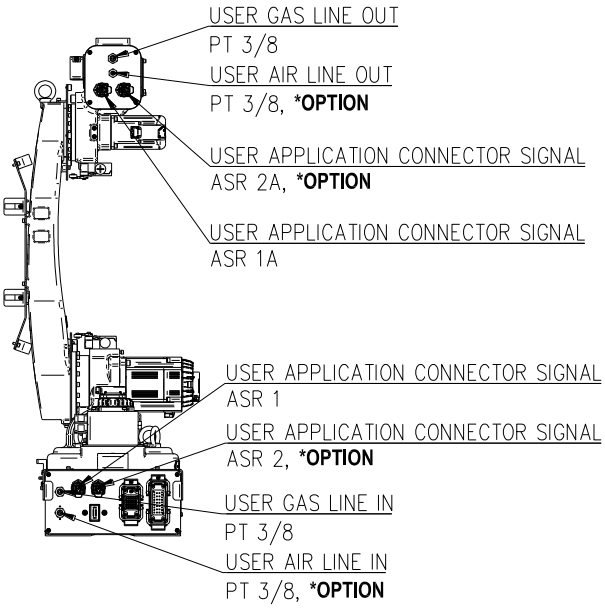

Figure 2.11 Wiring and Piping Diagrams for Applications (HDR8-14/HDR12-14)

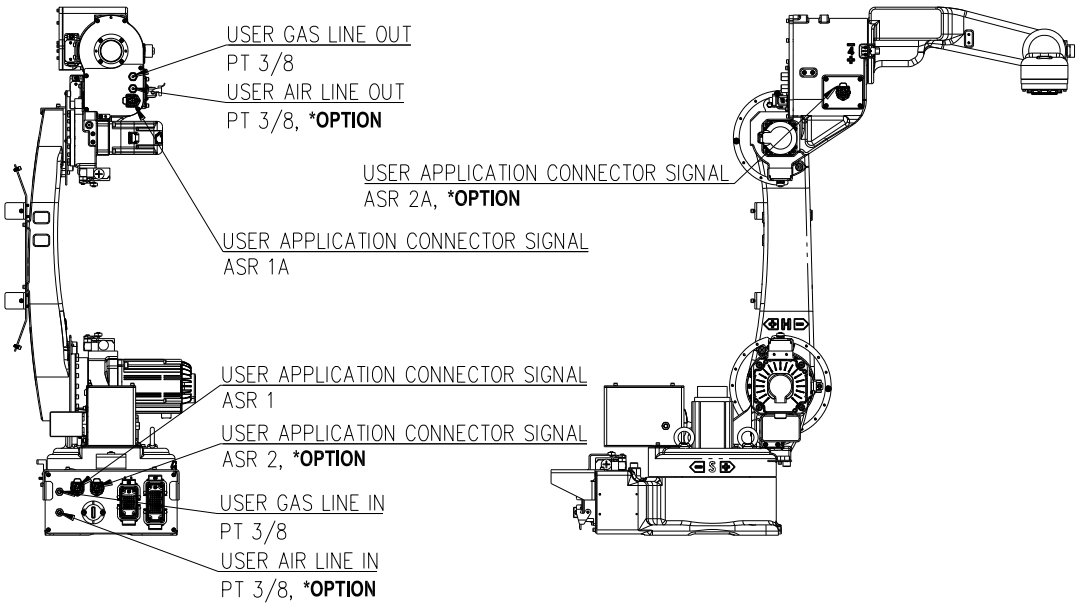

Figure 2.12 Wiring and Piping Diagrams for Applications (HDR12H-14)

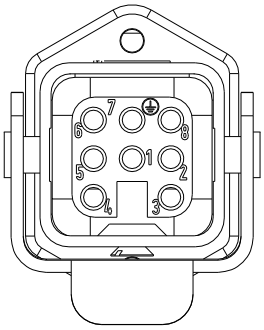	<ASR 1> Cable 0.75sq * 8c Connector type : HAN 8D (M) Corresponding connector : HAN 8D (F)	<ASR 1A> Cable 0.75sq * 8c Connector type : HAN 8D (M) Corresponding connector : HAN 8D (F)

Figure 2.13 Details of the Application Connectors

2.9. Restricting the Work Envelope

When installing the robot, take into account that the work envelope can be adjusted freely within the entire work envelope.

Restricting the work envelope will be useful in the following environments.

- ✓ When required to restrict the work envelope during robot operation
- ✓ When there is a collision with a peripheral device
- ✓ When the length of the application cables or hose is limited

The three methods to use to limit the work envelope of the robot are as follows.

- ✓ Software limit (applied to all axes)
- ✓ Limit switch (axes 1–3: optional application)
- ✓ Mechanical stopper (axes 1–3)

[Caution]

The mechanical stopper is a physical device. The robot should not exceed it. The mechanical stoppers of axes 1–3 are fixed. For axes 4–6, only the software limits are applied.

Once the mechanical stopper experiences a collision, it will become deformed, and its strength cannot be guaranteed. The user must replace it in such situation.

3

Precautions for Handling

3.1. Names of Individual Parts

The following picture shows the names of manipulator's individual parts.

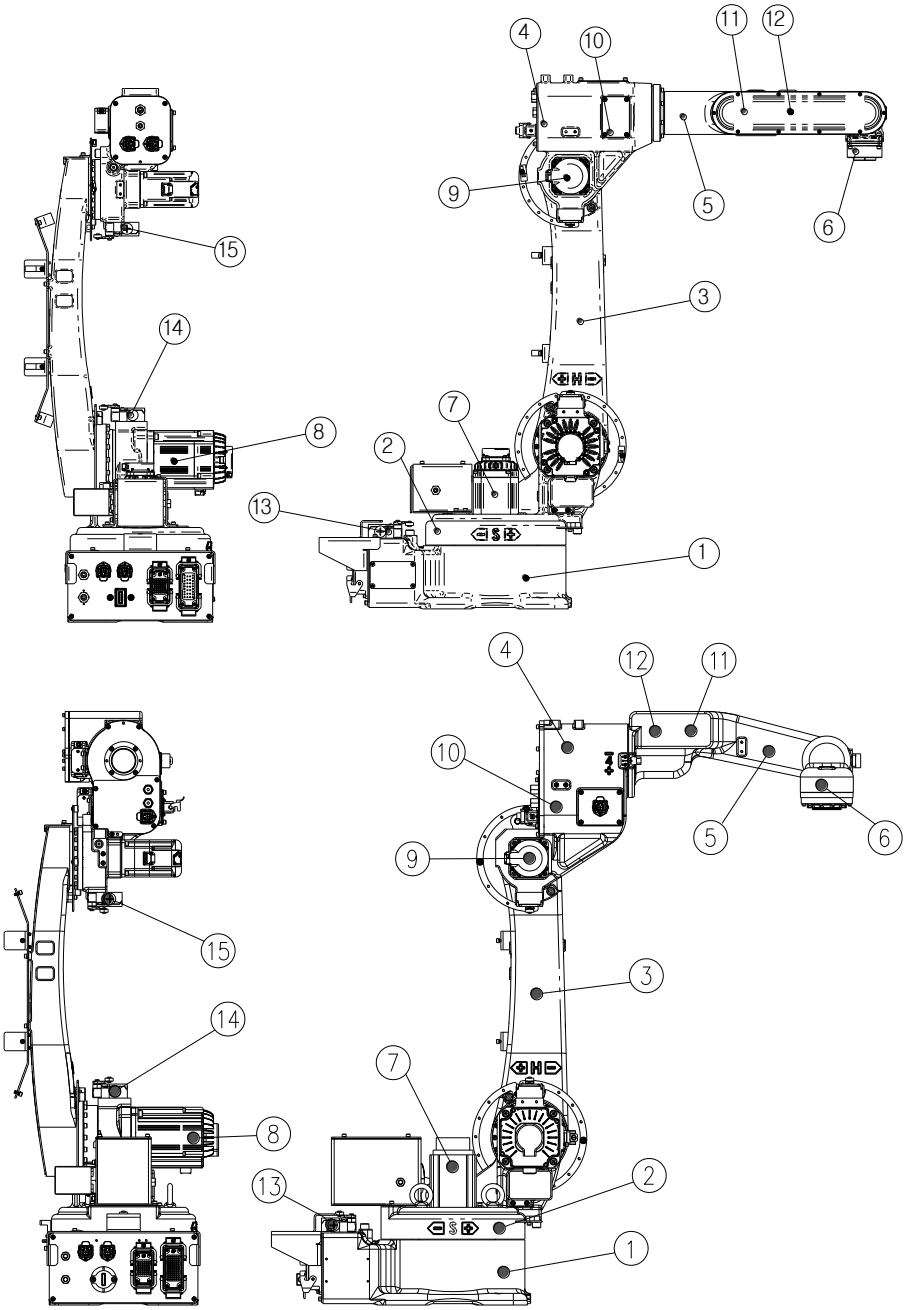

Figure 3.1 The Names of the Manipulator's Individual Parts (up) HDR8-14/HDR12-14 (down) HDR12H-14

Table 3-1 The Names of the Manipulator's Individual Parts

No.	Names of Individual Parts	No.	Names of Individual Parts
1	BASE BODY	9	V-AXIS MOTOR
2	LOWER FRAME	10	R2-AXIS MOTOR
3	UPPER FRAME	11	B AXIS MOTOR
4	ARM FRAME	12	R1-AXIS MOTOR
5	ARM PIPE	13	S-AXIS LIMIT SWITCH (OPTION)
6	WRIST BODY	14	H AXIS LIMIT SWITCH (OPTION)
7	S-AXIS MOTOR	15	V-AXIS LIMIT SWITCH (OPTION)
8	H AXIS MOTOR		

3.2. Location of the Safety Nameplate

To prevent any safety accidents, the manipulator has the safety nameplate as shown below. Do not remove or replace it unnecessarily.

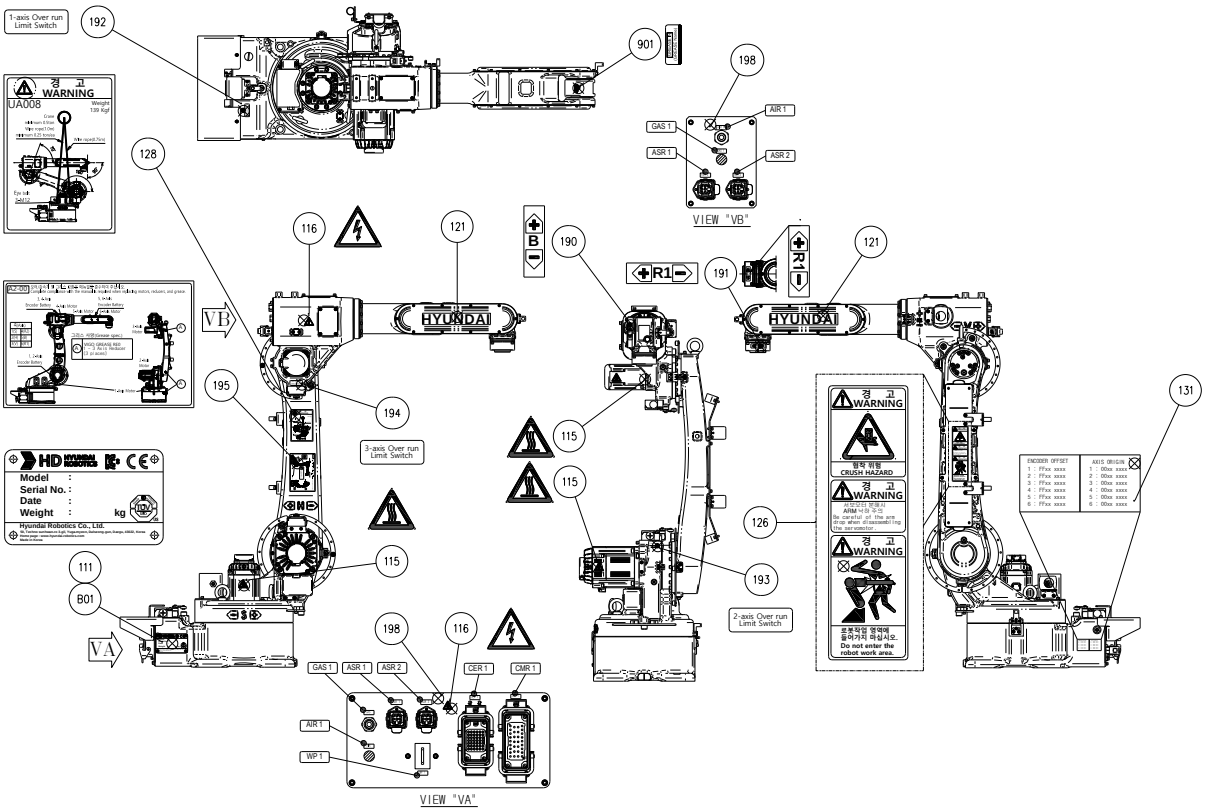

Figure 3.2 Location of the Safety Nameplate (HDR8-14/HDR12-14)

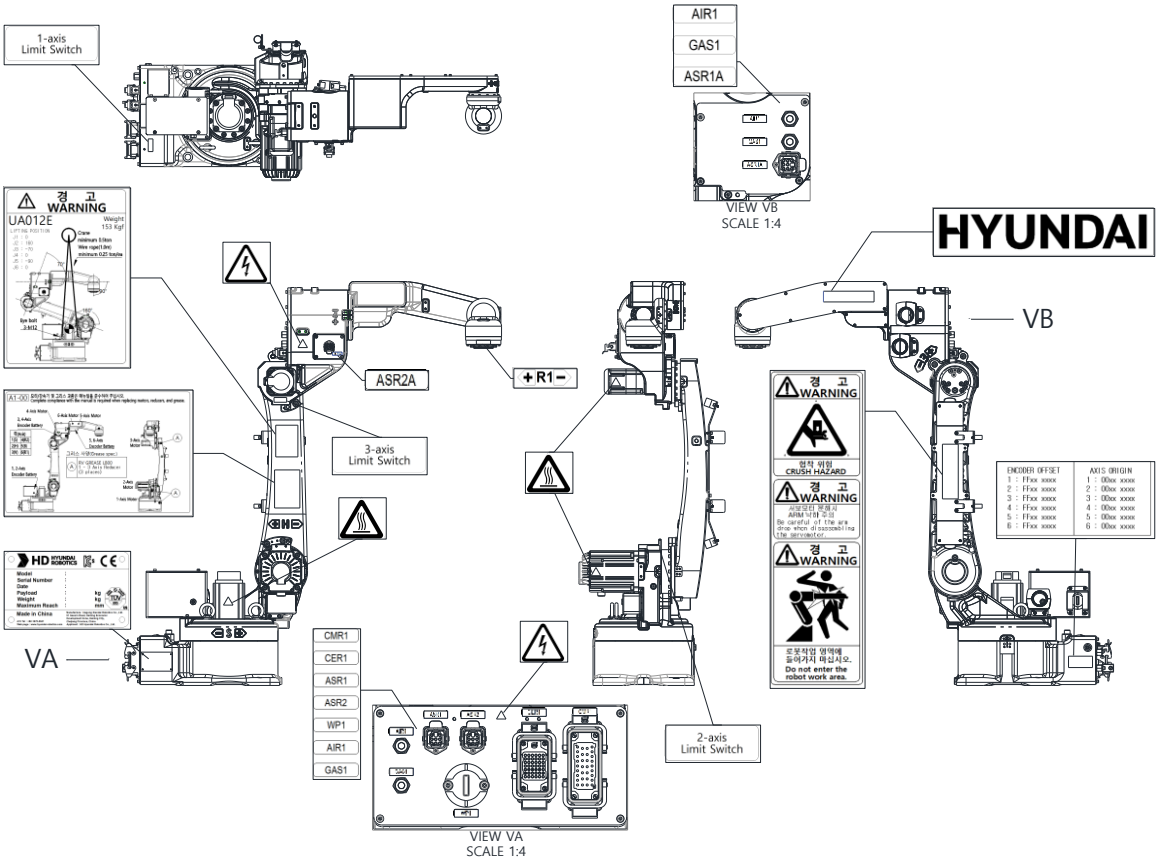

Figure 3.3 Location of the Safety Nameplate (HDR12H-14)

3.3. How to Transport

3.3.1. Using a Crane

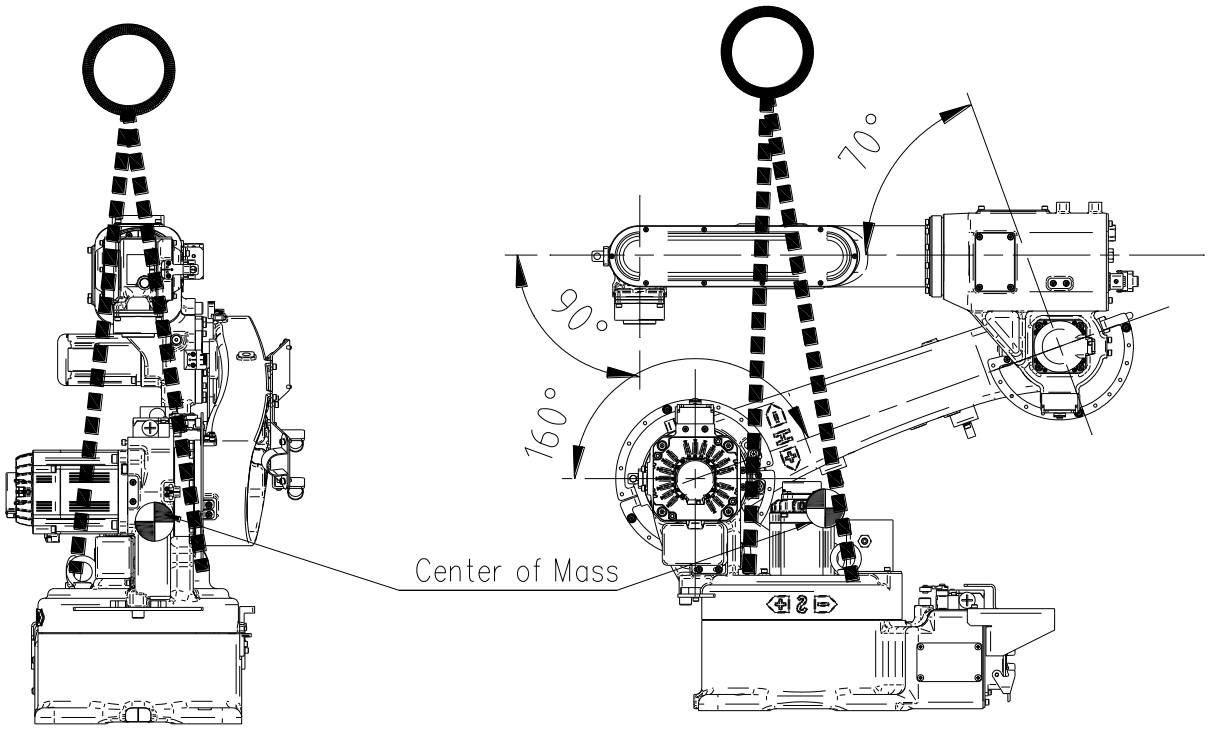

Figure 3.4 How to Transport: Using a Crane (HDR8-14/HDR12-14)

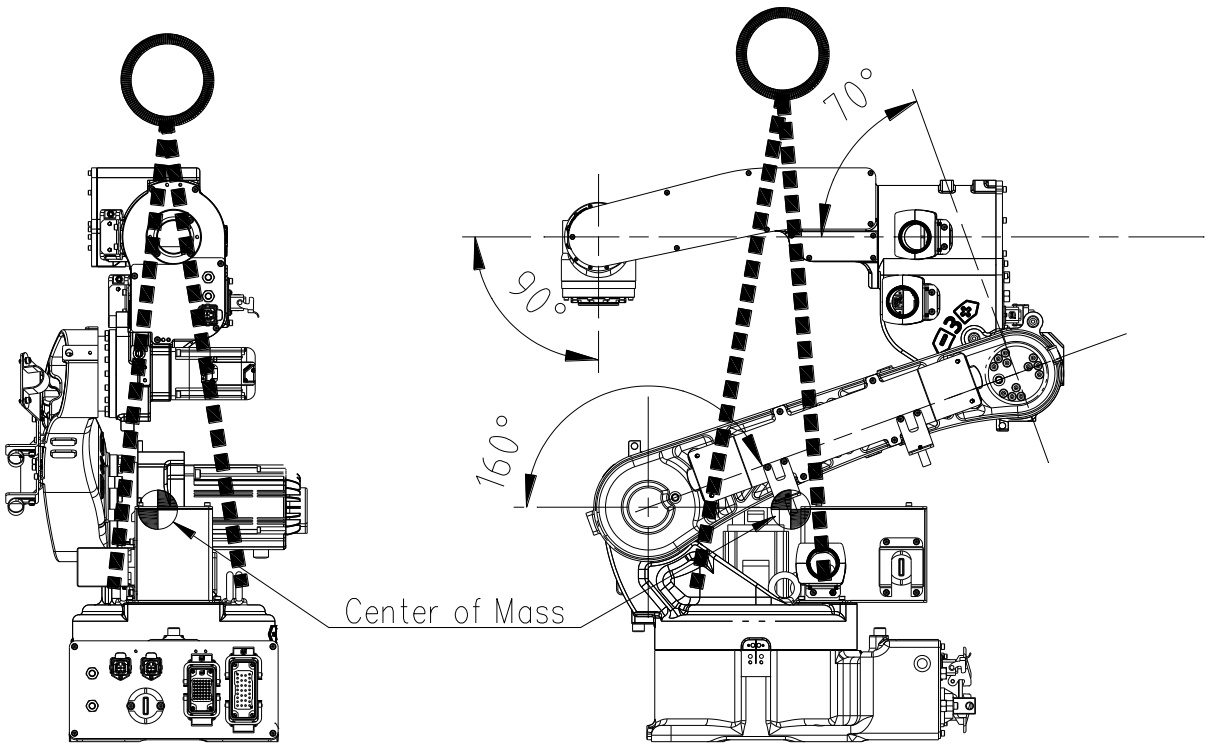

Figure 3.5 How to Transport: Using a Crane (HDR12H-14)

The following instructions for lifting the robot are valid for a factory-shipped robot. If additional equipment is put on the robot, the center of gravity may change and make lifting dangerous.

- Never walk under the manipulator.
- Pose the robot as shown in the figure.
- Install the M12 EYE BOLTS.
- Connect the wire ropes to the EYE BOLTS.
- Attach the protective hose (50 cm) to prevent damages to the manipulator.
- Observe the safety regulations during the lifting process.
- Manipulator's weight: 136 kg
- Minimum crane capacity: 0.5 tons

3.3.2. Use a Forklift

A forklift can be used to transport the manipulator.

For safety reasons, please observe the following.

- Make each model take the basic posture by referring to the figure.
- Fix the robot onto a pallet, and insert the forklift fork into the pallet to carry it. The pallet should be strong enough to withstand the weight.
- Carry at a slow speed.
- Follow all safety regulations.

Precautions

- Do not lean against the robot while carrying it.
- Make sure the robot does not collide with the floor while you are loading and unloading it.
- Pay attention to the relevant safety rules while working with the forklift.

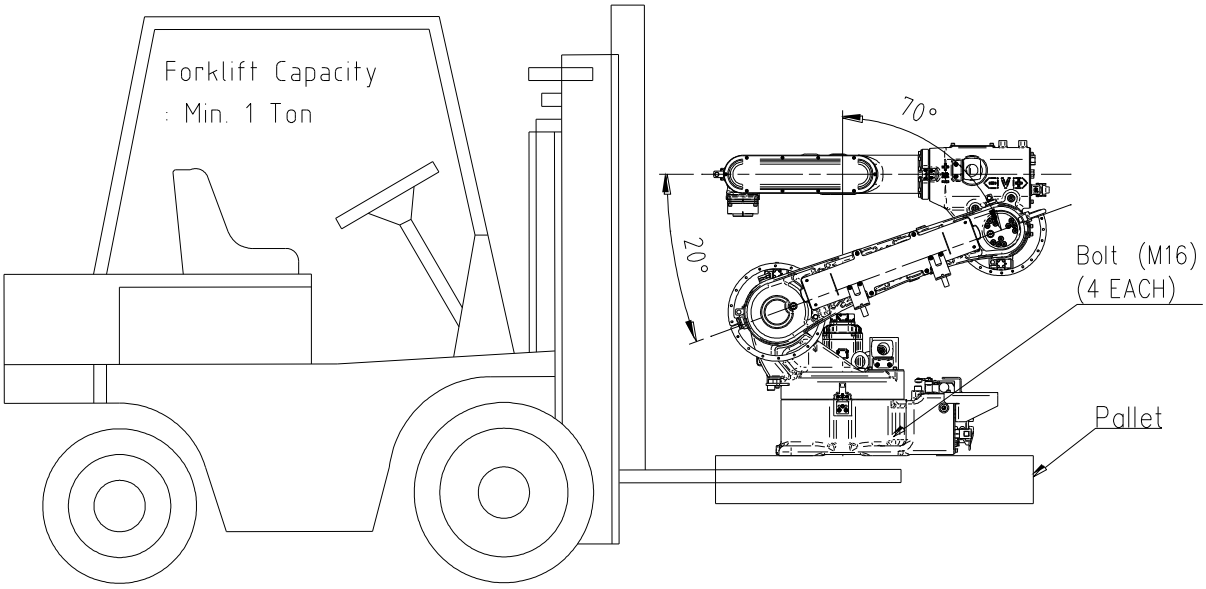

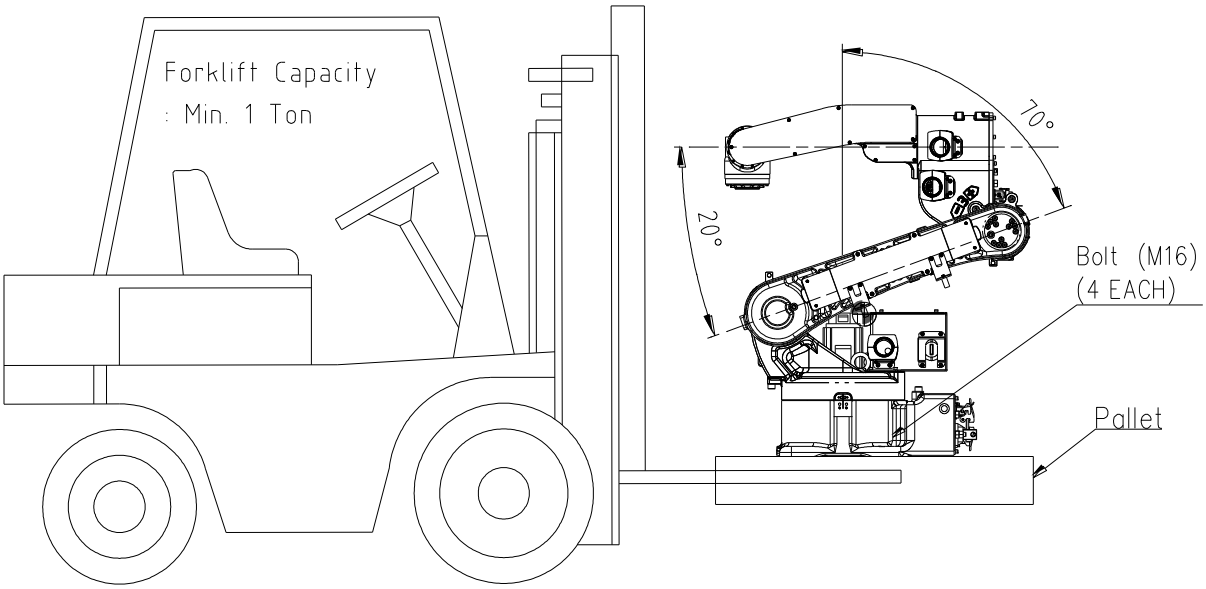

Figure 3.6 How to Transport: Using a Forklift (up) HDR8-14/UH021 (down) HDR12H-14

3.4. Storage of the robot

To store the robot without installing it, pose it as shown in [Figure 3.3].

[Caution]
If not placed as instructed, the robot may fall over. For long-term storage, take measures to ensure that it does not fall over.

3.5. Installation Methods

Caution:
Read the safety regulations or related instructions carefully before unpacking and installing the robot.

Warning:
Installation must be performed by an installation expert, and the relevant regulations of the concerned country or region should be observed.

When unpacking the robot, check whether it was damaged during transport or while being unpacked. In addition, because the installation methods and foundation for the manipulator are very important in maintaining the functions of the robot, you should strictly observe the following.

3.5.1. Working Conditions

(1) Ambient temperature should range from 0℃ to 45℃.
(2) Ambient humidity should range from 20% RH to 85% RH, without dew condensation.
(3) Less dust, oil, or moisture
(4) No flammable and corrosive liquid or gas
(5) No large impact and vibration
(6) There should be no large sources of electrical noise nearby.
(7) If the robot is not to be installed right away, it should be stored in a dry place with an ambient temperature of -15℃–40℃.

3.5.2. Installation of the Manipulator

The manipulator should be firmly fixed with four M16 bolts. All four bolts should be used.

- Bolts: M16(12.9) SOCKET HEAD BOLT
- Washer: Spring washers and plain washers
- Fastening torque: 290 Nm

The base floor where the robot is to be installed should be designed with hardness so that the dynamic effect to the robot can be minimized.

When installing the robot on the floor, if the thickness of the concrete floor is more than 200 mm, repair irregularities and cracks on the floor, and fix the mounting plate with M20 anchor bolts. If the thickness of the concrete floor is less than 200 mm, construction of an independent foundation will be necessary, so it should be reviewed before construction.

3.5.3. Dimensions of the Installation Surface

When attaching the manipulator, fix the bottom surface of the swivel base. Please refer to the pictures below for the dimensions.

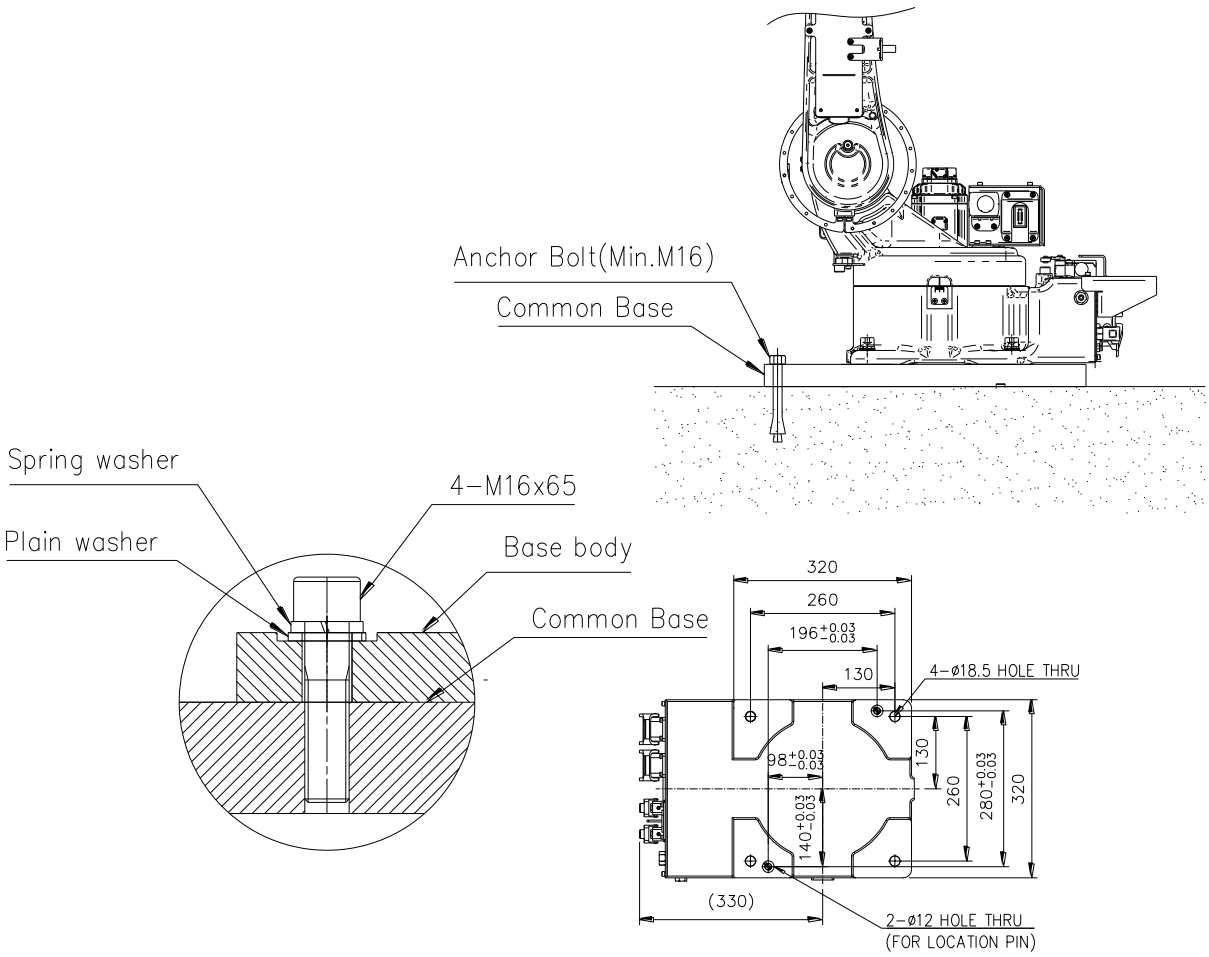

Figure 3.7 Dimensions of the Robot Installation Surface

Table 3-2 Reaction infomation

Max Moment(Nm)	Max Force (N)
7,015	6,115

3.5.4. Accuracy of the Installation Surface

The flatness of the four installation surfaces of the manipulator's plate attachment surface must meet these specifications, and use shims as necessary. The flatness of the remaining part must be within ±2 mm.

■ Precautions

① The flatness of the four mounting plates should be kept within 1.0 mm.
② The flatness of the four plate mounting surfaces should be kept within 1.0 mm (±0.5 mm).

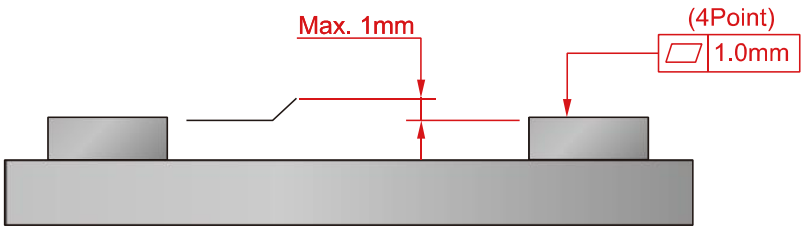

Figure 3.8 Accuracy of the Robot Installation Surface

3.5.5. Emergency Stop Time and Distance

The following items are the response time and distance measured for an emergency stop during the max speed operation of each axis (S, H, and V) with the standard load.

Robot category	HDR8-14			HDR12-14			HDR12H-14		
	S-axis	H-axis	V-axis	S-axis	H-axis	V-axis	S-axis	H-axis	V-axis
Max. time (s)	0.48	0.40	0.39	0.50	0.48	0.37	0.65	0.3	0.26
Max. moving distance	57.3 / 145.5	38.1/ 96.8	24.6/ 62.6	59.3 / 150.6	40.6/ 103.0	23.0/ 58.4	35.3/ 89.6	25.5/ 64.7	15.0/ 38.2

3.6. Allowable Load of the Wrist Axis

3.6.1. Allowable load torque calculation

The load, which will be applied to the mechanical interface of the robot's wrist axis, is restricted by the allowable weight, allowable load torque, and allowable moment of inertia. The direction of the coordinate system used to calculate the load torque and moment of inertia is the same as the direction of the robot base coordinate system. The R2 axis will be reviewed in the same manner as axis B.

- Step 1
  Calculate the location of the center of gravity at B axis' center of rotation (LX, LY, LZ)
  L_X: Location of the center of gravity in the direction of the X axis
  L_Y: Location of the center of gravity in the direction of the Y axis
  L_Z: Location of the center of gravity in the direction of the Z axis

- Step 2
  Calculate the distance from axes B and R1 to the center of gravity.

$$L_B = \sqrt{L_X{}^2 + L_Z{}^2}, \quad L_{R1} = \sqrt{L_Y{}^2 + L_Z{}^2}$$

  L_B : Length from the B axis' center of rotation to the center of gravity
  L_{R1} : Length from the R1 axis' center of rotation to the center of gravity

- Step 3
  Calculate the load torque from the calculated distance.

$$T_B = MgL_B \qquad T_{R1} = MgL_{R1}$$

  T_B: Load torque at the B axis' center of rotation
  T_{R1}: Load torque at the R1 axis' center of rotation
  M: Mass of load
  g: Gravitational acceleration

- Step 4
  Check if the load torque calculated in the step 3 is less than the limit value based on the table of allowable load torques.

- Note: If the load mass is similar to the mass on the torque curve below, the torque can be alternatively validated by checking if the distance calculated in step 2 is distributed in the torque curve instead of steps 3 and 4. If it is inside the torque curve, the calculated load torque is smaller than the allowable load torque, but if it is outside of the torque curve, the calculated load torque is bigger than the allowable load torque.

Allowable Load Torque

Table 3-3 Allowable Load Torque

Robot model	Allowable Load Torque		
	R2 Axis Rotation	B Axis Rotation	R1 Axis Rotation
HDR8-14	Within 17.6 N·m (1.80 kgf·m)		Within 7.8 N·m (0.80 kgf·m)
HDR12-14/HDR12H-14	Within 22.0 N·m (2.24 kgf·m)		Within 9.8 N·m (1.00 kgf·m)

3.6.2. Calculation of the allowable moment of inertia

By referring to tables [3-3]–[3-5], the user should use the load such that they do not exceed the allowable conditions.

- Step 1
  Calculate the moment of inertia value of the load at the center of each wrist axis (J_{a4}, J_{a5}, J_{a6}).
  J_{a4}- Moment of inertia at the R2 axis' center of rotation
  J_{a5}- Moment of inertia at the B axis' center of rotation
  J_{a6}- Moment of inertia at the R1 axis' center of rotation

- Step 2
  Check whether the moment of inertia value is within the limit based on the allowable moment of inertia table.

Allowable moment of inertia

Table 3-4 Allowable moment of inertia

Robot Model	Allowable moment of inertia		
	R2 Axis Rotation	B Axis Rotation	R1 Axis Rotation
HDR8-14	0.43 kg·m² (0.044 kgf·m·s²)		0.09 kg·m² (0.009 kgf·m·s²)
HDR12-14/HDR12H-14	0.65 kg·m² (0.066 kgf·m·s²)		0.17 kg·m² (0.017 kgf·m·s²)

3.6.3. Example of the calculation of the allowable torque and moment of inertia(HS180 Case)

(1) Case #1 Simple 2D model

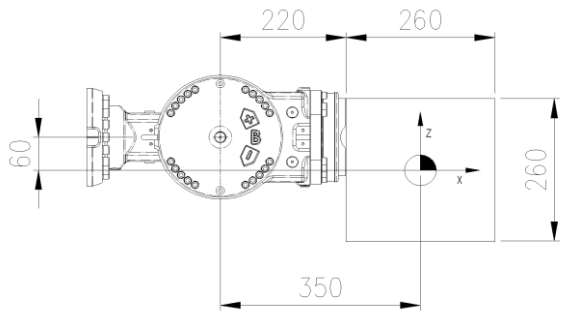

Figure 3.9 2D load model

M – Load weight
J_{xx} – Moment of inertia in the direction of the X axis at the center of gravity
J_{yy} – Moment of inertia in the direction of the Y axis at the center of gravity
J_{zz} – Moment of inertia in the direction of the Z axis at the center of gravity
J_{a4}- Moment of inertia at the R2 axis' center of rotation
J_{a5}- Moment of inertia at the B axis' center of rotation
J_{a6}- Moment of inertia at the R1 axis' center of rotation
☞ Load condition: Stainless steel with a length and width of 260 mm, respectively, and thickness of 260 mm (Mass 138.15 kg)

① Weight limitation
Load weight: $138.15 \leq 180$ kg

② Allowable torque limitation
Location of the center of gravity based on the B axis L_X = 350 mm, L_Y = 0 mm, L_Z = -60 mm
The distance from the B and R1 axes to the center of gravity can be calculated as follows.
Distance based on the B axis $L_B = \sqrt{0.35^2 + 0.06^2} = 0.355$ m
Distance based on the R1 axis $L_{R1} = 0.06$ m
B axis' load torque $T_B = MgL_B = 49.04$ kgfm ≤ 110 kgfm
R1 axis' load torque $T_{R1} = MgL_{R1} = 8.29$ kgfm ≤ 58 kgfm

③ Limitations of the allowable moment of inertia
Moment of inertia of the load at the center of gravity J_{xx}= 1.56kgm^2, J_{yy}= 1.56 kgm^2, J_{zz}= 1.56 kgm^2
B axis' moment of inertia (Ja5)
$J_{a5} = ML_B^2 + J_{yy} = 138.15 \times 0.355^2 + 1.56 = 18.97 \leq 106$ kgm^2

R1 axis' moment of inertia (Ja6)

$J_{a6} = ML_{R1}^2 + J_{xx} = 138.15 \times 0.06^2 + 1.56 = 2.06 \leq 56\ \mathrm{kgm}^2$

④ Conclusion

Safe because both the torque and moment of inertia limitation conditions are satisfied

(2) Case #2 Complex 3D model

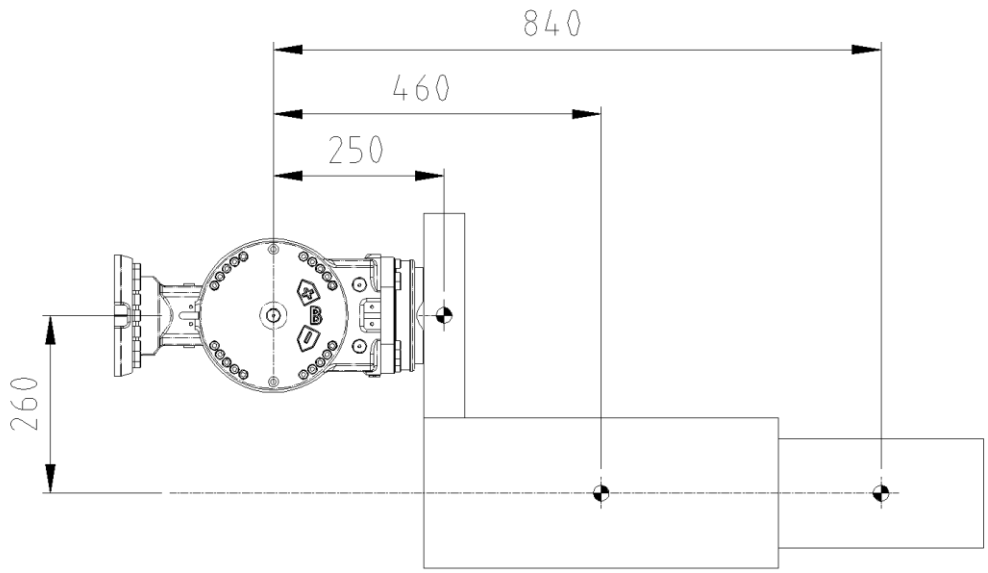

Figure 3.10 2D Shape of the 3D Model Load

Combination of aluminum block shapes
(σ=0.0027 g/mm^3 : 176.3 kg)
m1 (60×300×300) 14.6 kg
m2 (480×440×220) 125.4 kg
m3 (280×300×160) 36.3 kg

mi - i block's load weight
L_{Xi} - Location of the center of gravity in the i block in the direction of the X axis
L_{Yi} - Location of the center of gravity in the i block in the direction of the Y axis
L_{Zi} - Location of the center of gravity in the i block in the direction of the Z axis

① Weight limitation
Load weight: $176.3 \leq 180\ \mathrm{kg}$

② Allowable torque limitation

The location of the center of gravity of the entire load at the B axis' center of rotation will be calculated as follows.

$$L_x = \frac{\sum_i m_i L_{xi}}{\sum_i m_i} = \frac{14.6 \times 250 + 125.4 \times 460 + 36.3 \times 840}{176.3} = 520.85\ \mathrm{mm}$$

$L_y = 0\ \mathrm{mm}$ (as it is symmetric around the Y axis)

$$L_z = \frac{\sum_i m_i L_{zi}}{\sum_i m_i} = \frac{14.6 \times 0 + 125.4 \times 260 + 36.3 \times 260}{176.3} = 238.47\ \mathrm{mm}$$

Location of the center of gravity for the entire block, based on the B axis L_x = 520.85mm, L_y = 0mm, L_z = -238.47mm

Distance from the B axis to the center of gravity $L_B = \sqrt{0.521^2 + 0.238^2} = 0.573\ \mathrm{m}$
Distance from the R1 axis to the center of gravity $L_{R1} = \sqrt{0.238^2 + 0.0^2} = 0.238\ \mathrm{m}$

B axis' load torque $T_B = MgL_B = 101.02\ \mathrm{kgfm} \leq 110\ \mathrm{kgfm}$
R1 axis' load torque $T_{R1} = MgL_{R1} = 41.96\ \mathrm{kgfm} \leq 58\ \mathrm{kgfm}$

x1 y1 z1 – The length of the m1 block in the x, y, and z directions
x2 y2 z2 – The length of the m2 block in the x, y, and z directions
x3 y3 z3 – The length of the m3 block in the x, y, and z directions

L_{X1}, L_{Y1}, L_{Z1} – The location of the m1 block's center of gravity at the center of rotation of the B axis
L_{X2}, L_{Y2}, L_{Z2} – The location of the m2 block's center of gravity at the center of rotation of the B axis
L_{X3}, L_{Y3}, L_{Z3} – The location of the m3 block's center of gravity at the center of rotation of the B axis

Jxx1, Jyy1, Jzz1 – The moment of inertia for x, y, and z axes at the m1 block's center of gravity respectively
Jxx2, Jyy2, Jzz2 – The moment of inertia for x, y, and z axes at the m2 block's center of gravity respectively
Jxx3, Jyy3, Jzz3 – The moment of inertia for x, y, and z axes at the m3 block's center of gravity respectively

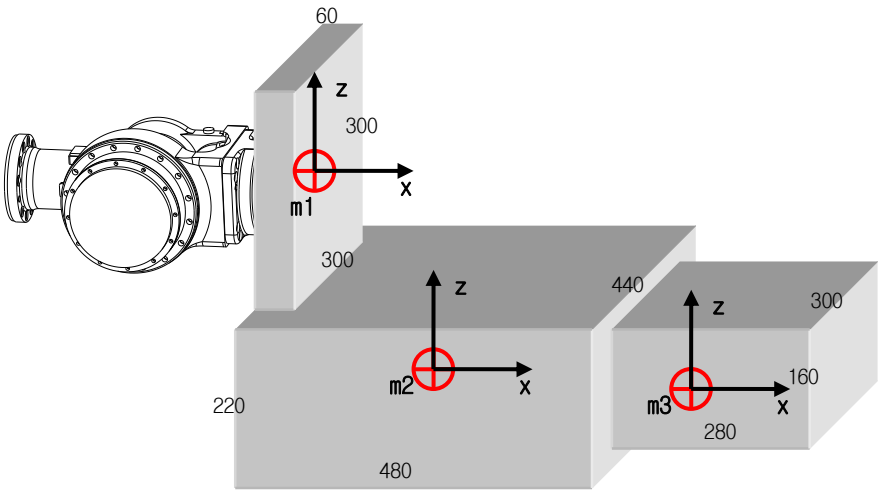

Figure 3.11 3D Shape of the 3D Load Model

③ Limitations of the allowable moment of inertia

Table 3-5 Moment of inertia for each block at the center of gravity

Block weight (kg)	Center of gravity (LX, LY, LZ)	J_{xx}	J_{yy}	J_{zz}
m_1 (14.6)	(0.25, 0, 0)	0.219 kgm^2	0.114 kgm^2	0.114 kgm^2
m_2 (125.4)	(0.48, 0, -0.26)	2.530 kgm^2	2.915 kgm^2	4.433 kgm^2
m_3 (36.3)	(0.89, 0, -0.26)	0.350 kgm^2	0.314 kgm^2	0.509 kgm^2

B axis' moment of inertia (J_{a5})

$$J_{a5} = \sum_i \left[m_i(L_{xi}^2 + L_{zi}^2) + J_{yyi}\right]$$

$$= [14.6 \times (0.25^2) + 0.114] + [125.4 \times (0.46^2 + 0.26^2) + 2.915] + [36.3 \times (0.85^2 + 0.26^2) + 0.314] = 67.95 \leq 106 \text{ kg}m^2$$

R1 axis' moment of inertia (J_{a6})

$$J_{a6} = \sum_i \left[m_i(L_{yi}^2 + L_{zi}^2) + J_{xxi}\right]$$

$$= [14.6 \times (0^2) + 0.219] + [125.4 \times (0.26^2) + 2.530] + [36.3 \times (0.26^2) + 0.350] = 14.03 \leq 56 \text{ kg}m^2$$

④ Conclusion

Safe because the weight, torque, and moment of inertia limitation conditions are satisfied

4

Inspection

This chapter describes the regular inspection, disassembly, and adjustment necessary to maintain the performance of the robot for a long time.

4.1. Inspection Plan

Inspection is absolutely necessary to maintain high performance when operating the robot for a long period.
Inspection consists of daily inspections and periodic inspections. The basic inspection cycles are indicated in [Table 4-1]. The person in charge of inspection must conduct inspections according to the inspection cycles.
In addition, overhauling should be performed every 35,000 operation hours.

The inspection cycle has been reviewed for the spot welding, so when the inspection cycle is required for high-precision work, such as handling work, it is recommended that you perform the inspections approximately at half the cycles of the cycles in [Table 4-1]. If it is difficult to understand the inspection and adjustment methods, contact our After-Sales Service Center (Customer Support Department).

Table 4-1 Inspection plan

Daily Inspection	Daily	Manipulator, motors, and reducers
Periodic Inspection	3 months	Wiring, bolts, and reducers
	1 year	Limit switches / dogs, brakes

4.2. Inspection Items and Cycles

Table 4-2 Inspection Items and Cycles

No.	Inspection cycle			Inspection item	Inspection method	Reference	Remarks
	Daily	3 months	1 year				
Common for the manipulator and each axis							
1	○			Cleaning the manipulator	Check for impurities, etc., with the naked eye.		
2		○		Inspection of the wiring	Check the cables for any damage with the naked eye. Cable fixing bracket fastening bolts Check the paint markings with the naked eye. Check for any damage		
3		○		Main bolts	Check the paint markings with the naked eye.		
4			○	Limit switches / dogs	Limit switch On/Off Check the functions	Check whether the emergency stop lamp is turned on while the limit switch	
5	○			Motors	Check for abnormal heating. Check for any abnormal sounds		
6			○	Brake	Check whether the brake release switch works in the ON and OFF states. Note) When the brake release is turned on, the arm or operating axis may fall, so turn it	When the brake release switch is in Off state, the arm or end effector will	

S, H, and V Axes							
7	○			Reducers	Check for any abnormal sounds. Check for any		
R2, B, and R1 Axes							
8		○		Reducers	Check for any abnormal sounds. Check for any		
9		○		End effector Tightening bolts	Check the paint markings with the naked eye.		
10		○		Clearance	Rotate each axis in the forward and reverse directions to check for clearance.	No clearance should be felt with	

- If the robot is utilized in adverse conditions (such as spot welding, grinding, etc.), shorten the inspection cycle to ensure the performance of the robot system.
- Inspect all cables that can be seen, and replace damaged ones.
- Check the mechanical bumpers for any deformation or damages. If a bumper is damaged or a dog is bent, replace it immediately.
- Check the tightening torque of the main bolts as shown in [Figure 4.1]–[Figure4.2].
- Check for any abnormal sounds in auto mode and teaching mode to check the power transmission systems (motors, reducers, etc.) for abnormalities.

4.3. Inspection of Main External Bolts

Recommended bolt torque is shown in the following figures [Figure 4.1]–[Figure4.2].
Fasten the bolts using appropriate torques with a torque wrench, and mark them with paint.

Table 4-3 Inspection parts of the main bolts

No.	Inspection parts	No.	Inspection parts
1	Attachment bolt for the reducer of the basic axis	3	For attaching Arm 1
2	Attachment bolt for the basic axis	4	For attaching an end effector

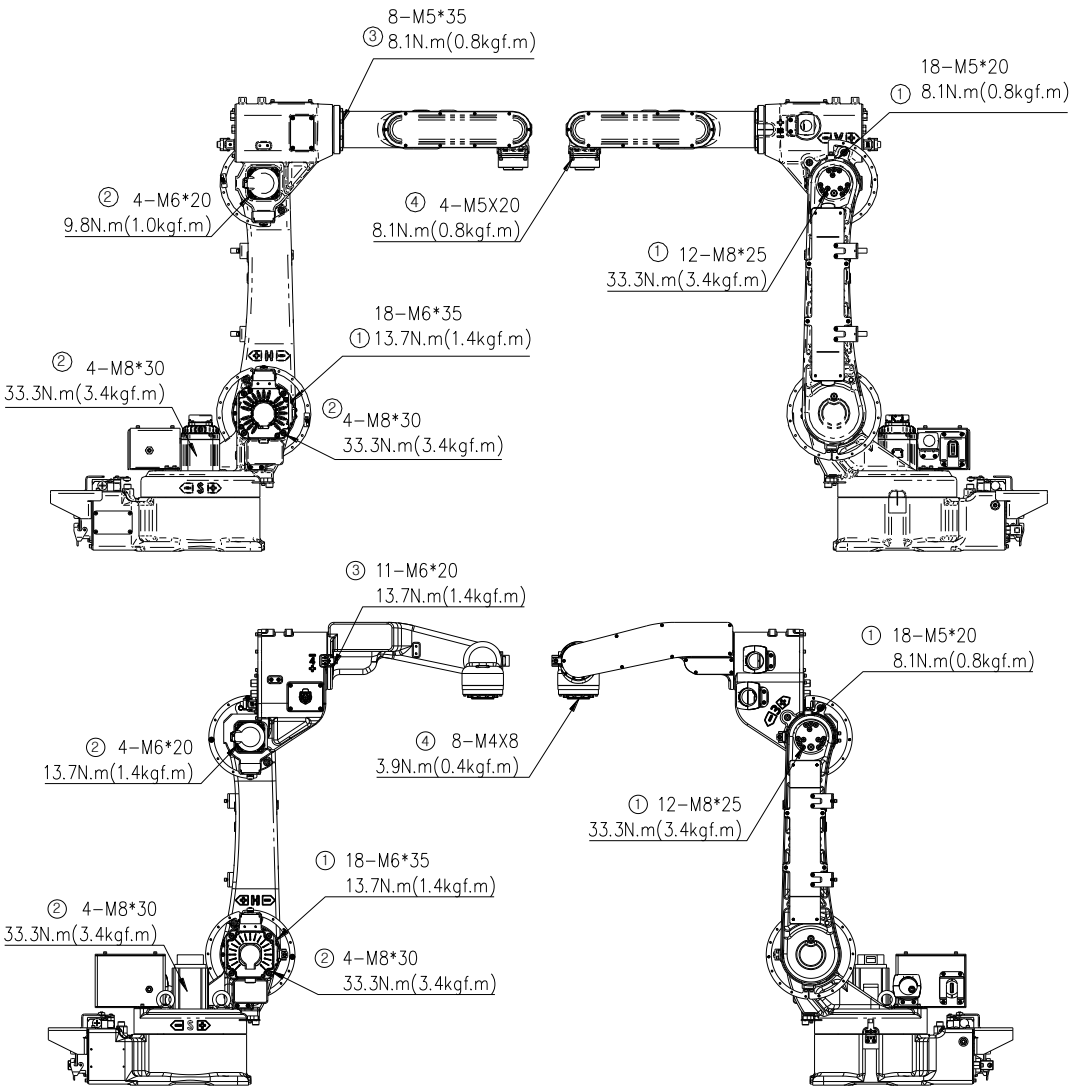

Figure 4.1 Inspection parts of the main bolts (up)HDR8-14/HDR12-14 (down) HDR12H-14

4.4. Inspecting the Wiring Inside the Manipulator

Even though bending-resistant wirings are used inside the manipulator, if they are disconnected or shorted because of damages or breaking, there will be a problem with the operation of the robot. Daily inspection should be carried out without fail.
Also, you must conduct a preliminary inspection when working within the work envelope according to the conditions for safety inspection below.

4.4.1. Conditions for Safety Inspection

When doing work such as teaching the robot within the work envelope of the industrial robot (except for when blocking the drive source of the industrial robot), the user should check the following items before working. Then, if an abnormality is identified, it must be corrected immediately, and other necessary measures should be taken.

- Check the coating and cables of external power for any sign of damage.
- Check whether there are abnormalities with the operation of the manipulator.
- Check the emergency stop function.

4.4.2. Inspection parts

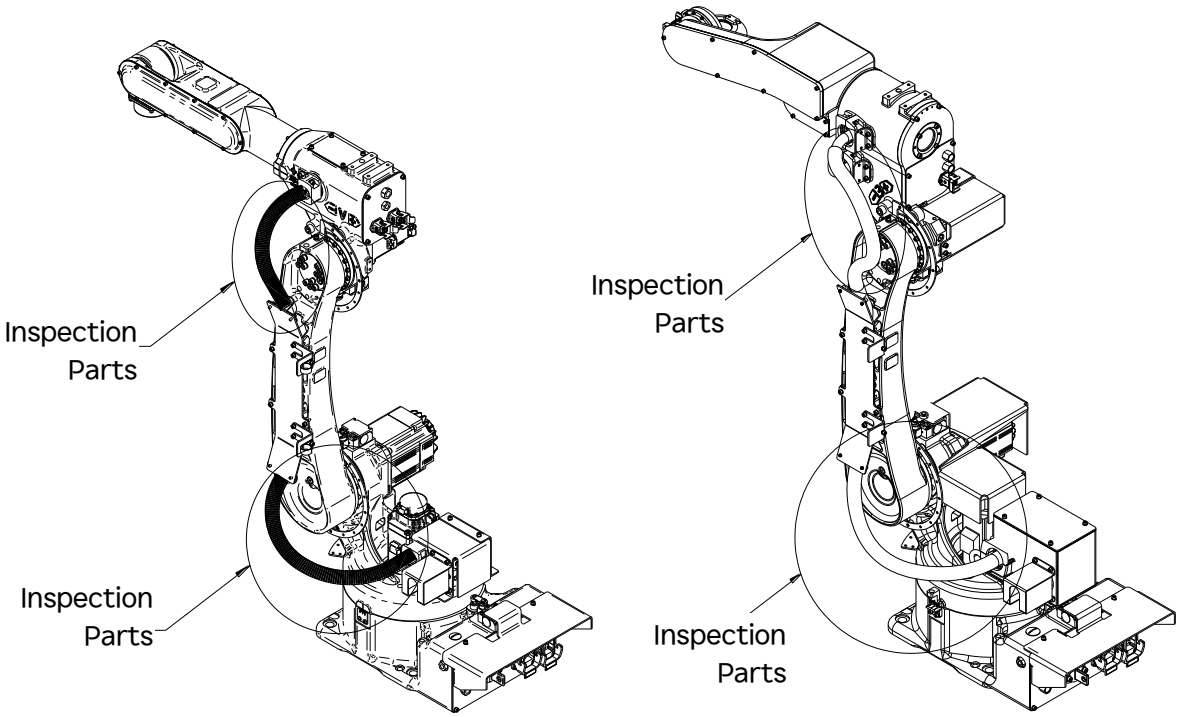

Figure 4.2 Inspection Parts of the Cables (left) HDR8-14/HDR12-14 (right) HDR12H-14

4.5. Inspection of the Timing Belt

The small robot HDR8-14/HDR12-14/HDR12H-14 has a timing belt applied to the wrist axis driving part.
For the timing belt drive unit, check the belt tension every 1,500 hours or if vibration/noise occurs. If tension is not proper, it can have a significant adverse effect on the performance of the robot.

- Checking of the Timing Belt of the B and R1 Axes
  - ① Turn off the power.
  - ② Remove the arm pipe cover.
  - ③ Press the timing belt with the given force (F=0.2 kgf) as shown in the figure.
  - ④ Check the amount of pressing.
  - ⑤ If the checked amount of pressing does not match the appropriate amount of pressing (3.4 mm), slightly loosen the motor flange bolt.
  - ⑥ Set the tension of the timing belt.
  - ⑦ Tighten the motor flange bolt (75 kgf·cm.)
  - ⑧ Assemble the arm pipe cover.
  - ⑨ Turn on the power.

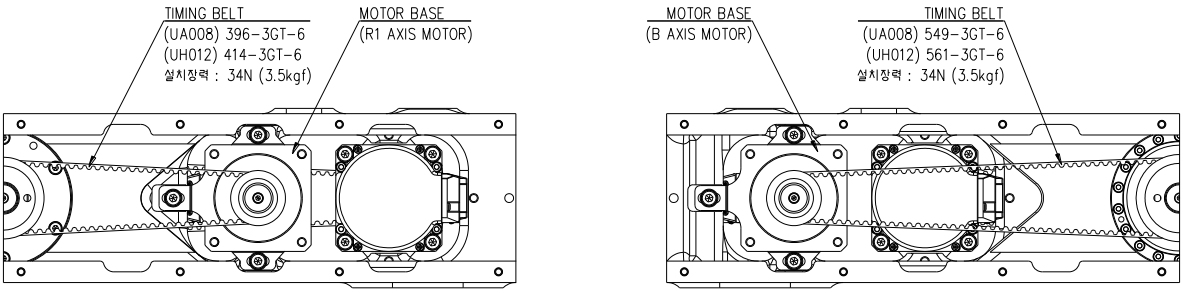

Figure 4.3 Part of the timing belts of the B and R1 axes that need to be checked for tension (HDR8-14/HDR12-14)

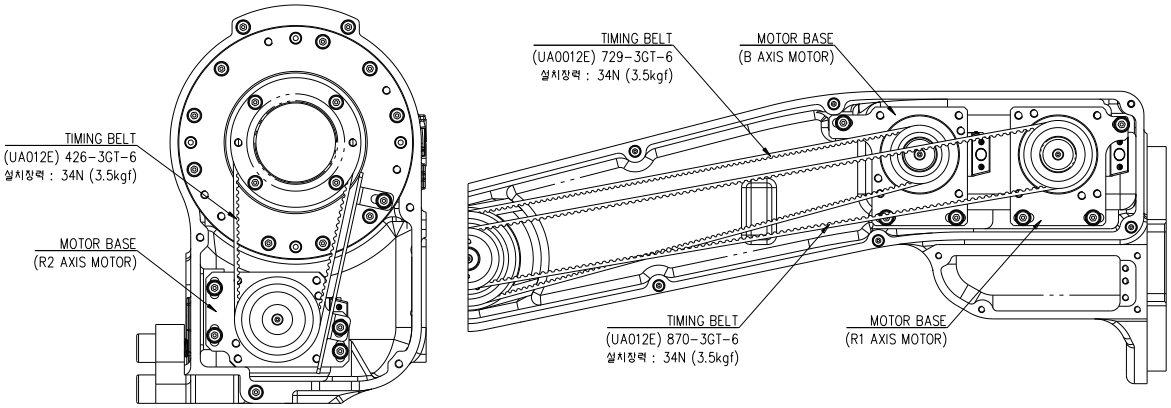

Figure 4.4 Part of the timing belts of the B and R1 axes that need to be checked for tension

(HDR12H-14)

5

Maintenance

5.1. Grease injection after grease replacement and reducer replacement

Caution
If grease is not injected correctly, the internal pressure at the grease injection part may suddenly increase, possibly causing damage to the seal, grease leakage, and abnormal operation. When injecting grease, the user must observe the following.

(1) Wear safety glasses before injecting grease and conducting inspections.

(2) Remove the grease outlet plug before injecting grease.

(3) When the plug is loosened, grease and the plug could be discharged abruptly. Block the outlet with a thick cloth to prevent injuries caused by discharged grease or plugs, and keep distance for safety. (Do not look into the grease outlet.)

(4) If possible, do not use a compressed air pump driven by factory-supplied air, and limit the grease injection pressure to 1.5 bar (1.5 kgf/cm^2, 0.15 MPA) or less.

(5) Use only the specified grease. Otherwise, the reducer may be damaged or other problems may be caused.

(6) After injecting the grease, check for any leakage from the grease outlet and whether there is any pressure at the inlet, and then connect the plug.

(7) To prevent possible accidents, completely remove any excess grease leaked on the manipulator or the floor.

(8) When the robot is used at an ambient temperature of 35℃ or higher, the grease replenishment and replacement periods should be reduced by half.

■ Grease Replacement Cycle

Replacement Cycle
✓ **Grease replacement: Every 12,000 hours**

If there is still noise in the reducer even after using the specified grease, operate the robot while checking the state closely for 1–2 days. Generally, the noise will go away. (You can see that the noise disappears even when you operate the axis at high speeds for more than 5 to 10 minutes.)

The noise may be caused by the following.

1. Operation after greasing or replacing the reducer
2. Operation after long-term disuse
3. Operation at a low speed
4. Operation at a low temperature

■ Rate of the grease injection amount based on VIGO GREASE

	VIGO GREASE RE0	RV GREASE LB00	REMARKS
Specific gravity (25°C)	0.9g/㎤	0.87g/㎤	
Rate of the grease injection amount	100%	96.7%	

- VIGO GREASE RE0, EUREKA 114 No.0 → RV GREASE LB00

■ Rate of the grease injection amount based on EUREKA

	VIGO GREASE RE0	RV GREASE LB00	REMARKS
Specific gravity (25°C)	0.9g/㎤	0.87g/㎤	
Rate of the grease injection amount	100%	96.7%	

- EUREKA 114 No.0 → RV GREASE LB00
- Please avoid using EUREKA grease. When the use of EUREKA grease is necessary, please contact us.

5.1.1. S-Axis Reducer

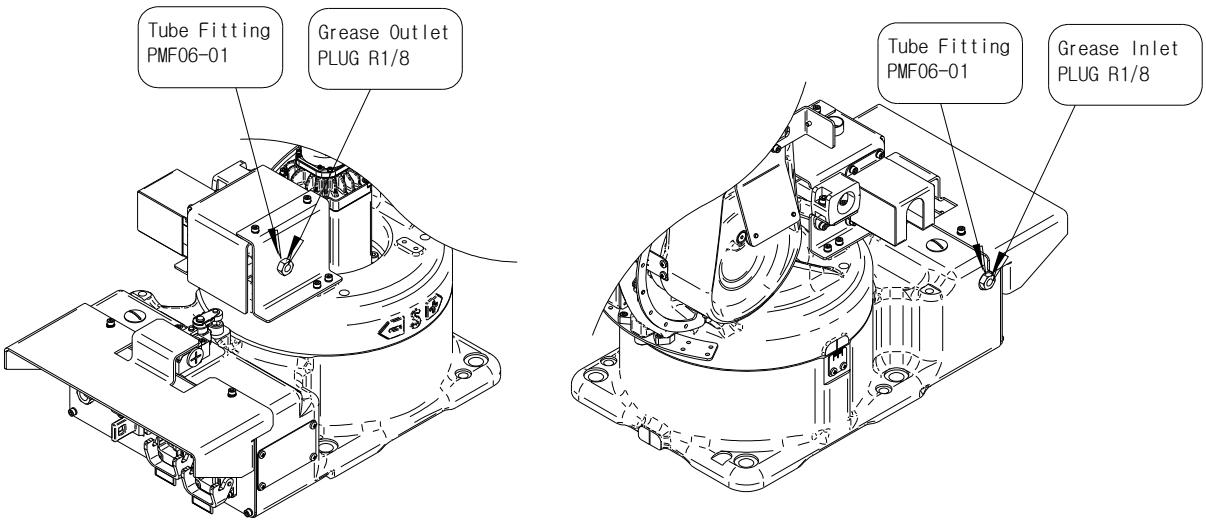

Figure 5.1 Locations of S-Axis Reducer Grease Inlet/Outlet

Caution
Injecting grease without removing the plug of the outlet may cause an increase of internal pressure and oil leaks and damages the motors because of the inflow of grease. Please remove the plug.

■ Grease Replacement

(1) Remove the outlet plug

(2) Inject the grease into the grease inlet using a grease gun.

- ✓ **Grease type: RV GREASE LB00**
- ✓ **Amount of grease : 314cc(273g)**

(3) Inject the new grease until it comes out of the outlet. New grease can be identified by color.

(4) Wipe the outlet with a cloth, and discharge any excess grease.
① Attach a plastic bag to the grease outlet.
② Test drive the S axis at ±45° at 50% speed for approximately 1.5 hours.
③ Remove the plastic bag.

(5) Wipe the grease around the outlet, and reassemble the plug with the sealing tape wrapped around it.

- Injection of Grease After the Replacement of the Reducer

(1) Prepare grease nipples A-PT1/4 and A-PT1/8.

(2) Remove grease inlet plugs G1/4 and G1/8, and fasten grease nipples A-PT1/4 and A-PT1/8.

(3) Remove grease outlet plugs G1/4 and G1/8 and the air vent set, and then attach plugs G1/4 and G1/8 to the air vent set.

(4) Inject the grease into the grease inlet using a grease gun.

> ✓ **Grease type: RV GREASE LB00**
> ✓ **Amount of grease : 392cc(341g)**

(5) Inject grease until it comes out of the outlet.

(6) Discharge excess grease and residual pressure. (Refer to the discharge procedure below.)

(7) Remove the inlet's grease nipple and the air vent's plug, and assemble the inlet plug and air vent set.

- Procedures for removing the excess grease and residual pressure after replacing grease or newly injecting grease

(1) Attach a grease receiver or hose to the grease outlet to prevent contamination from discharged grease.

(2) Perform operation within a range without the interference of the surroundings under the following conditions.
① Operation angle: 80° or more
② Operation speed: 50%
③ Operation time: 20 minutes or more

(3) Wipe the outlet with a cloth, and reinstate the plug.

5.1.2. H/V-Axis Reducer

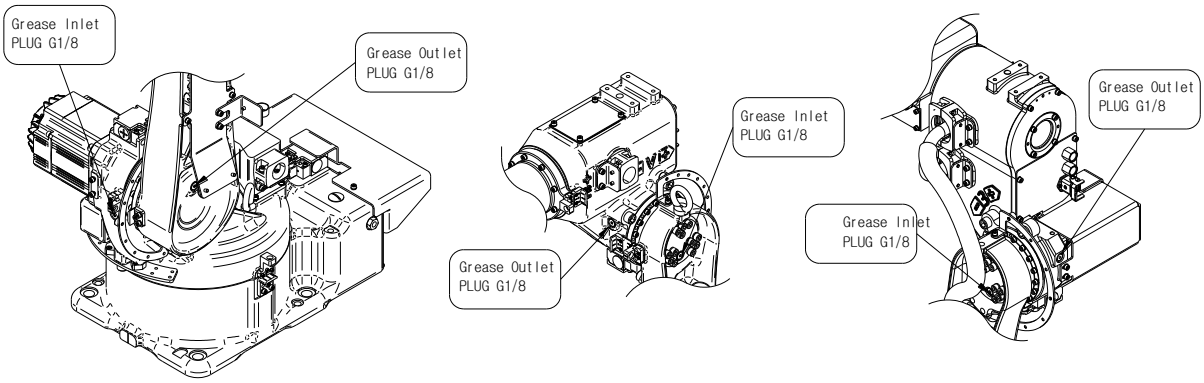

Figure 5.2 Location of the V-Axis Reducer Grease Inlet/Outlet
(left) common (center) HDR8-14/HDR12-14 (right) HDR12H-14

<u>Caution</u>
Injecting grease without removing the plug of the outlet may cause an increase of internal pressure and oil leaks and damages the motors because of the inflow of grease. Please remove the plug.

■ Grease Replacement

(1) Set the H-axis arm vertically and the V-axis arm horizontally.

(2) Remove the outlet plug

(3) Inject the grease into the grease inlet using a grease gun.

> ✓ **Grease type: RV GREASE LB00**
> ✓ **Amount of grease**
> **H AXIS : 330cc(287g)**
> **V AXIS : 203cc(177g)**

(4) Inject the new grease until it comes out of the outlet. New grease can be identified by color.

(5) Move the H axis for a few minutes to remove the old grease, then inject the new grease until it comes out of the outlet.

(6) Wipe the outlet with a cloth, and discharge any excess grease.
① Attach a plastic bag to the grease outlet.
② Test operate the H and V axes at ±45° at 50% speed for approximately 1.5 hours.
③ Remove the plastic bag.

(7) Wipe the grease around the outlet, and reassemble the plug with the sealing tape wrapped around it.

- Injection of Grease After the Replacement of the Reducer

(1) Prepare grease nipples A-PT1/4 and A-PT1/8.

(2) Remove grease inlet plugs G1/4 and G1/8, and fasten grease nipples A-PT1/4 and A-PT1/8.

(3) Remove grease outlet plugs G1/4 and G1/8.

(4) Inject the grease into the grease inlet using a grease gun.

> ✓ Grease type: RV GREASE LB00
> ✓ Amount of grease
> H AXIS : 413cc(359g)
> V AXIS : 254cc(221g)

(5) Inject grease until it comes out of the outlet.

(6) Discharge excess grease and residual pressure. (Refer to the discharge procedure below.)

(7) Remove the grease nipple of the inlet and assemble the inlet plug.

- Procedures for removing the excess grease and residual pressure after replacing grease or newly injecting grease

(1) Attach a grease receiver or hose to the grease outlet to prevent contamination from discharged grease.

(2) Perform operation within a range without the interference of the surroundings under the following conditions.
① Operation angle: H axis at 90° or more, V axis at 70° or more
② Operation speed: 50%
③ Operation time: 20 minutes or more

(3) Wipe the outlet with a cloth, and reinstate the plug.

5.2. Replacing the Battery

The location data of each axis is preserved using a backup battery. The batteries must be replaced every two years. When replacing the battery, follow this procedure.

(1) Press the emergency stop button while the controller is in the Power On state.

> **Caution**
> If you turn off the power and replace the battery, all current position data will be lost. As a result, it will be necessary to set the origin again.

(2) Remove the cover at the location of the battery of each axis.

(3) Remove the old battery.

(4) Assemble the new battery. Please pay attention to the direction when assembling it.

> ✓ **Battery specification: ER6V(AA) 3.6 V**
> ✓ **Manufacturer: TOSHIBA BATTERY Co., LTD.**

(5) Reinstall the cover.

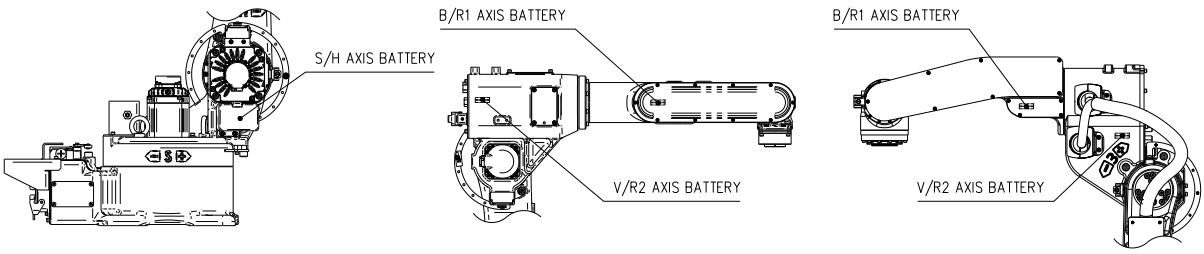

Figure 5.3 Location for the Replacement of the Battery
(left) common (center) HDR8-14/HDR12-14 (right) HDR12H-14

Caution

- ✓ Do not throw away the batteries. Dispose of them as industrial waste according to the laws and regulations of the concerned country.
- ✓ Do not recharge the battery. It may explode or overheat.
- ✓ Do not use a battery other than the ones with the designated specifications.
- ✓ Replace the current battery only with the specified ones.
- ✓ Do not short the negative and positive poles of the battery.
- ✓ Do not expose a battery to flame or high temperatures.

5.2.1. Precautions for Battery Storage

(1) Do not store the battery in a place with high temperature or high humidity. Store it in a well-ventilated place to avoid condensation.

(2) Store the battery in a place at room temperature (20±15℃) where the temperature barely changes and the relative humidity is 70% or less.

(3) Set the storage period of the battery to six months, and manage it in a first-in, first-out manner.

5.3. Replacement of Wiring Inside the Manipulator

The following items will affect the replacement cycle of the wiring of the manipulator.

- ✓ Continuous operation
- ✓ Operation speed
- ✓ Ambient environment

Inspect periodically every three months and check for any damage on the cables or cable protector springs. If there are any damages, the damaged one should be replaced.

Replace the cables every 16,000 operating hours regardless of the use conditions.

Caution

- ✓ As bending-resistant wires are used, do not use wires other than the specified ones.
- ✓ Wiring replacement should be done by unit.
- ✓ Do not use any cables, protective springs, and hoses that have external damage, as they may cause future problems.
- ✓ When purchasing the cables for use inside the robot, please contact our service department for the wiring type.
- ✓ Specify the length of the wiring from the manipulator to the controller.

6

Troubleshooting

6.1. How to Investigate the Causes of the Issues

When an abnormality occurs during the operation the robot, and if it is not a problem with the controller, it is a problem attributable to damaged mechanical parts. To handle issues easily and quickly, it is required to first accurately identify the phenomenon and determine to which parts the defects are attributable.

(1) Step 1: Which axis has the abnormality?
First, check which axis has an abnormal phenomenon. When a strange phenomenon does not appear during operation and it is difficult to judge, investigate the following items.

- Are there any areas where an abnormal sound is generated?
- Are there any areas where abnormal heating occurs?
- Are there any parts that have clearance?

(2) Step 2: Are there any damaged parts?
If an axis with a problem is identified, investigate which part is causing the problem. There may be multiple causes for one phenomenon. Please refer to [Table 6-1] on the next page for possible phenomena and their causes.

(3) Step 3: Handling defective parts
Dispose of parts that are found to be defective according to the methods described in "6.3 Methods to Investigate and Handle Each Part." For matters other than those that can be handled by your company, please contact our service department.

6.2. Symptoms and Causes of Issues

As shown in [Table 6-1], there can be multiple parts that are thought to be the cause of a single phenomenon.
Please refer to the next page to determine which parts are damaged.

Table 6-1 Symptoms and Causes of Issues

Location of abnormality / Symptoms of the issue	Reducers	Brake	Motor	Encoder	Backlash	Grease
Overload [Note 1]	○	○	○			
Position deviated	○		○	○		
Abnormal sound generated	○	○	○			○ [Note 5]
Vibration during operation [Note 2]			○		○	
Shaking when stopping [Note 3]			○	○		
Irregular cycle (pulsation) [Note 4]			○	○		
Deviation			○	○		
Axis free-falling	○	○				
Abnormal heating	○	○	○	○		○
False operation and runaway			○	○		

[Note 1] Overloaded ---------- A phenomenon that occurs when a load exceeding the conditions of the rated specification of the motor is applied.
Specifically, it occurs when the temperature relay or circuit breaker is cut off.
[Note 2] Vibration during operation ------- Vibration that occurs during operation
[Note 3] Shaking when stopped ------- A phenomenon in which rocking occurs repeatedly around the stop position when stopped.
[Note 4] Irregular cycle (pulsation) - A phenomenon in which a predetermined cycle is not maintained and vibration occurs in a holding posture
[Note 5] If there are noises coming from the greased part of the reducer during low-speed operation, operate the robot while checking the state closely for 1–2 days. Generally, the noise will go away.

(The noise will go away if you run the axis at high speed for 5–10 minutes).

The noise may be caused by the following.

1. Operation after greasing or replacing the reducer
2. Operation after long-term disuse
3. Operation at a low speed
4. Operation at a low temperature

6.3. How to Investigate and Handle Each Part

6.3.1. Reducers

If the reducer is damaged, phenomena such as vibration and abnormal sounds will appear. In this situation, abnormalities such as overload and deviation that will interfere with normal operation and abnormal heating may occur. Also, there are cases where the robot does not move at all or position deviation occurs.

[Main Axes (S, H, V)]
When turning [ON][OFF] the brake release switch of the H and V axes, the arm may fall, so take measures to prevent this, and then activate the brake release switch.

- Investigation method
  ① Investigate whether there is any clearance in the bearing by applying force to the first and second arms.
  (If a chain block is to be used, while maintaining the posture of the first and second arms, investigate whether there is any clearance in the bearing with no load applied to the reducer.)
  ② Investigate whether the robot has come into contact with or collided with a peripheral system.

- Handling method
  Replace the reducer. As next, facilities such as a Chain Block are needed to suspend the robot arm. If you have any difficulty, please contact our service department.

[Wrist Axes (R2, B, R1)]
When turning [ON][OFF] the brake release switch, the arm may fall, so take measures to prevent it, and then activate the brake release switch.

- Investigation method
  ① Check for any vibration, abnormal sound, or abnormal heating at the reducer part when the robot is operating.
  ② Check for any clearance in the reducer by applying force to the end effector (such as a spot gun and hand device, etc.).
  ③ While cutting off the Operation Ready mode and turning the brake release switch to the [ON] state, investigate whether the axis can be moved with the hands. If it does not move, it means that there is an abnormality in it.
  Investigate if there has been any contact with the robot's peripheral devices before the emergency occurs.
  (There are cases wherein the reducer is damaged because of contact-induced impact.)

- Handling method
  ① Replace the reducer.
  ② Replace the entire wrist part.
  (Because it takes time and equipment to replace the reducer, replacing the entire wrist part can allow the work to be done quickly and reliably.)

6.3.2. Brake

If a problem occurs to the brake, each axis may fall in some cases while in the Operation Ready[OFF] state. Or, conversely, the brake may operate even in the Operation Ready [ON] state. In cases like these, overloading and noise may occur subsequently.

⚠ When intending to move the manipulator without turning the Motor [ON], operate it by turning the brake release switch [ON]. Before turning the switch [ON], take the necessary measures to prevent the robot arm from dropping, as the robot arm will drop because of gravity.

- Investigation method
  While in the Operation Ready [OFF] state, turn the brake release switch [ON] and [OFF] and investigate if the brake makes any operating sounds. If there are no operating sounds, there is a disconnection. (When turning the brake release switch [ON] and [OFF], the user should be careful of the arm dropping. The brake release switch is located on the board on the door side when the controller door is opened.)

- Handling method
  When you check the wiring and if it is not disconnected, replace the motor.

6.3.3. Motor

If there is an abnormality in the motor, abnormal motions such as shaking when stopped, irregular cycle (pulsation), and vibration during operation may occur. Abnormal heating and abnormal sounds may also occur.

Considering that a similar phenomenon occurs even when the reducer is damaged, investigate the reducer and bearing at the same time to determine the cause.

- Investigation method
  Investigate whether there are any abnormal sounds or abnormal heating.

- Handling method
  Replace the motor.

6.3.4. Encoder

If an encoder has an abnormality, it may cause position deviation, false operation, runaway, etc., which may lead to shaking when stopping or irregular pulsation. In addition, these issues have nothing to do with the occurrence of abnormal mechanical sounds, heating, and vibration.

- Investigation method
  ① Investigate whether there is any abnormality in the encoder data.
  ② Set to the reference position of the adjustment scale, and check whether there are any errors in the position data.
  ③ While moving each axis of the robot, investigate whether there is an axis showing irregularity in the data.
  ④ Investigate whether an error does not occur when the servo amplifier board, BD640, is replaced.

- Handling method
  ① Check the wiring, and if it is not disconnected, replace the encoder.
  ② If no errors occur when the servo amplifier board, BD640, is replaced, replacing the servo amplifier board is a requirement.

6.4. Motor Replacement

Caution:

When the motor is separated, the arm will drop because of its built-in brakes for holding robot's posture. To prevent this, the user should essentially ensure that safety measures, such as suspending the arm using devices like a crane, etc., or fixing the first and second arms with fixing pins, are employed.

When contacting the motor right after it stops, check the motor temperature. Motor weights are listed as follows. Be careful when dealing with the motor.

Table 6-2 Weight (motor)

Axis / Model	S	H	V	R2	B	R1
HDR8-14/HDR12-14	5.3Kg	9.5kg	3.1kg	0.7Kg	0.9kg	0.9kg
HDR12H-14	5.3Kg	9.5kg	3.1kg	1.3Kg	1.3kg	1.3kg

Caution:
For this task, there is a part that needs to be performed while in the Operation Ready [ON] state. Therefore, workers should work in a team of two, with one person ready to press the emergency stop button at any time, and the other person working quickly while paying particular attention to the robot's movements. Also, before working, please check the evacuation area.

6.4.1. Necessary Tools and Parts

Table 6-3 Necessary Tools(Motor)

Tool Name	Part No. (Type)	Remarks
Torque wrench (to be prepared by the customer)	M8 torque wrench (Long type) M6 torque wrench (Long type) M5 torque wrench (Long type) M4 torque wrench (Long type) M3 torque wrench (Long type)	Use a torque wrench and extension on the market.

Table 6-4 Necessary Parts and the Methods to Set the Origin of Each Axis

Equipment Type	Necessary Parts	S	H	V	R2	B	R1
HDR8-14/HDR12-14	Position Adjustment Scale	○	○	○			
	Position Adjustment V-groove	○	○	○	○	○	○
	Mastering Block	○	○	○	○	○	
HDR12H-14	Position Adjustment Scale	○	○	○	○	○	
	Position Adjustment V-groove	○	○	○	○	○	
	Mastering Block	○	○	○	○	○	

(During the overhauling of the robot, precise origin setting can be performed using a level gauge. If precise origin setting is required, please contact us.)

6.4.2. How to Replace the Motor

(1) Put the controller in Teaching mode, and turn the Operation Ready mode to [ON] state. If the Operation Ready [ON] state cannot be not achieved, first make sure that the arm does not fall, and check whether it is sufficiently fixed. From here, we will start with step (4).

(2) Put the axis whose motor is to be replaced into the basic posture.

(3) For main axes (S, H, V): See [Figures 6.1–6.5]
For H and V axes: Insert a fixing bolt to prevent the arm from falling.
For wrist axes (R2, B, R1): Set the origin using the V-shaped groove for each axis

(4) Turn the controller power [OFF] and turn the primary power [OFF].

(5) Disconnect the motor wiring.

(6) Remove the motor attachment bolt, and remove the motor from the manipulator.

(7) Remove the gear attached to the motor shat.
At this time, be careful not to apply strong shock to the motor shaft.

(8) Apply a thin layer of grease to the motor shaft to be assembled, and then assemble the gear.
At this time, clean and degrease the bolts that will be used to fasten the gear to the motor shaft, apply loosening prevention bond (Loctite 243) to the threads, and then tighten the bolts according to the specified torque using a torque wrench. Also, tighten the bolts slowly in a symmetrical direction.

(9) Apply an appropriate amount of grease to the gear teeth and attach the motor to the manipulator.

(10) Connect the motor wiring.

(11) When replacing the H and V axis motors, replenish the grease until it is equal in amount to the grease that has leaked.

(12) Reset the encoder at the axis on which the motor is replaced.

Precautions
Before compensating the encoder, set the Operation Ready mode to the [ON] state, and press the Enable switch on the teach pendant for two to three seconds to check whether the power is supplied.

(13) Compensate the encoder of the axis on which the motor was replaced by referring to [Encoder Compensation] in the controller operation manual.

(14) Disassemble the arm drop prevention pins or bolts of the H and V axes.

(15) Check if there are any problems with the robot operation.

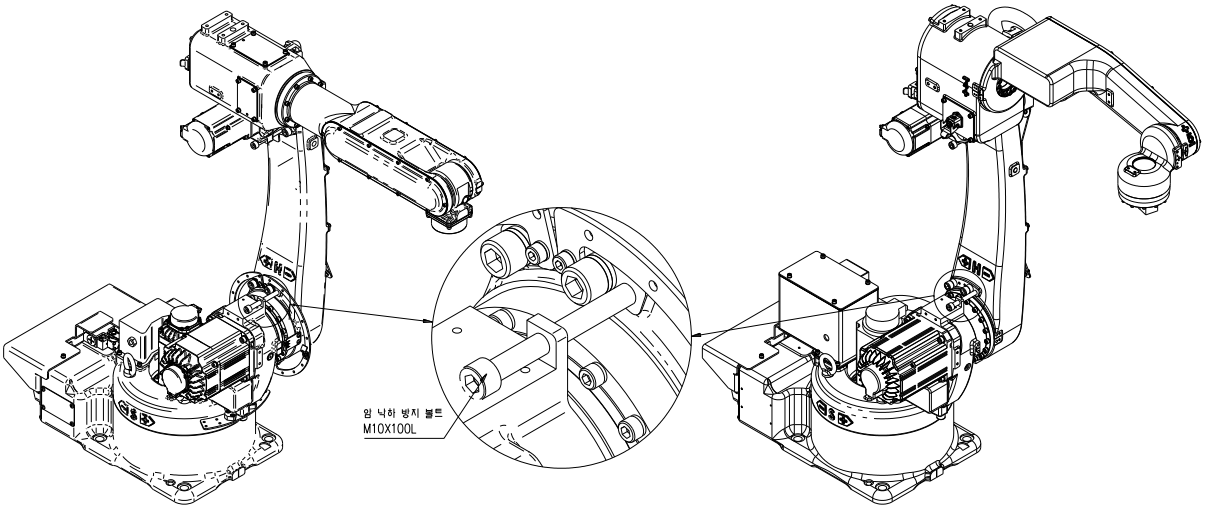

Figure 6.1 1st Arm (H axis) Fixing Bolt Insertion Location (left) HDR8-14/HDR12-14 (right) HDR12H-14

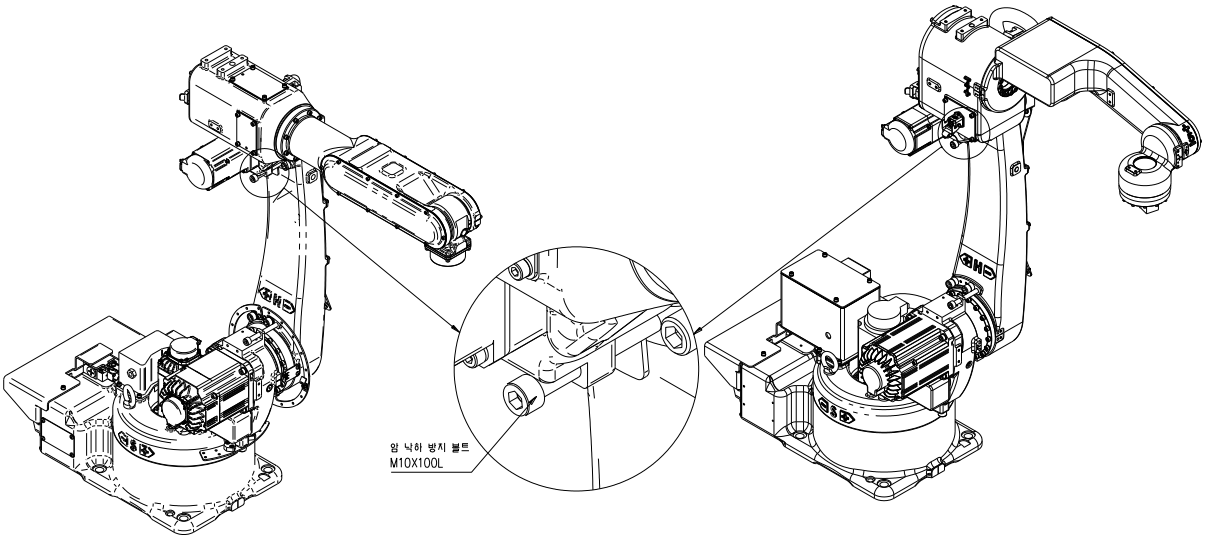

Figure 6.2 2nd Arm (V axis) Fixing Bolt Insertion Location (left) HDR8-14/HDR12-14 (right) HDR12H-14

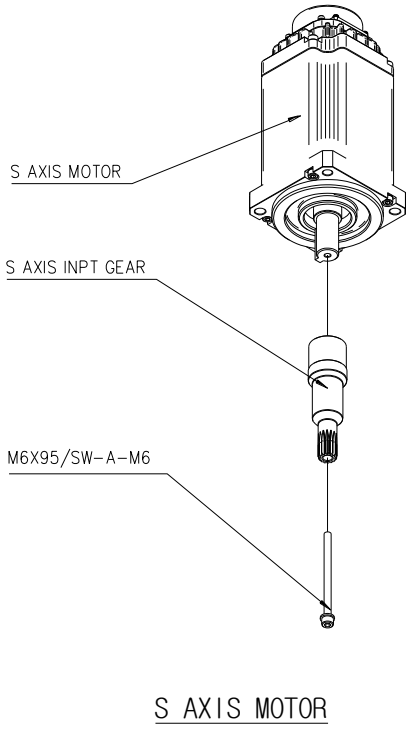

Figure 6.3 S Axis Motor Assembly

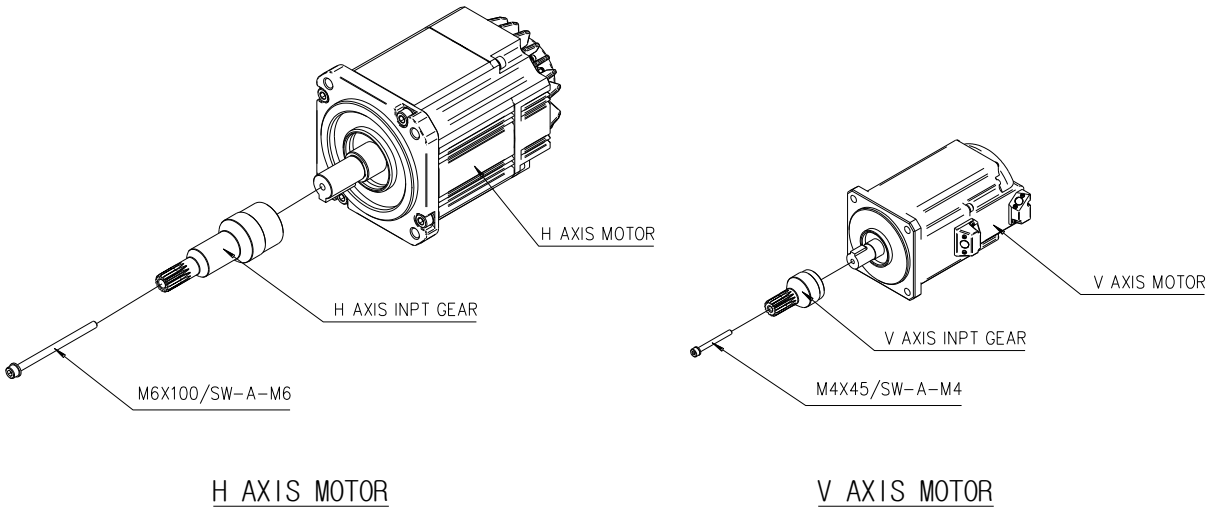

Figure 6.4 Assembly of H and V Axes

Caution

When replacing the V-axis motor, if the entire upper arm is not accurately adhered to the mechanical stopper in the direction of gravity, the upper arm may rotate when the motor is separated.

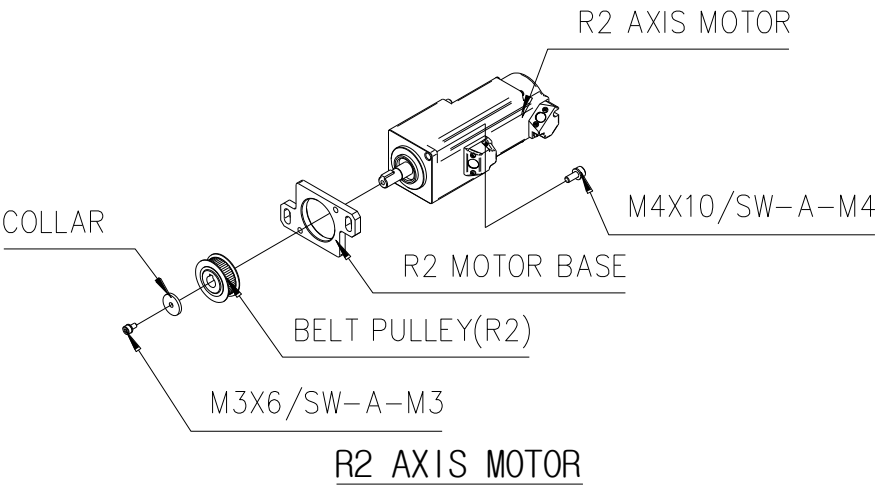

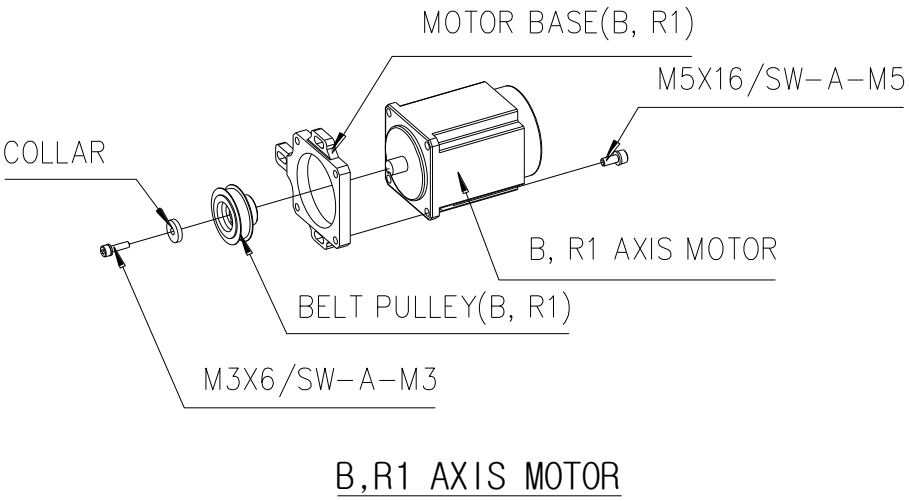

Figure 6.5 Motor Assemblies of R2, B, and R1 Axes (HDR8-14/HDR12-14)

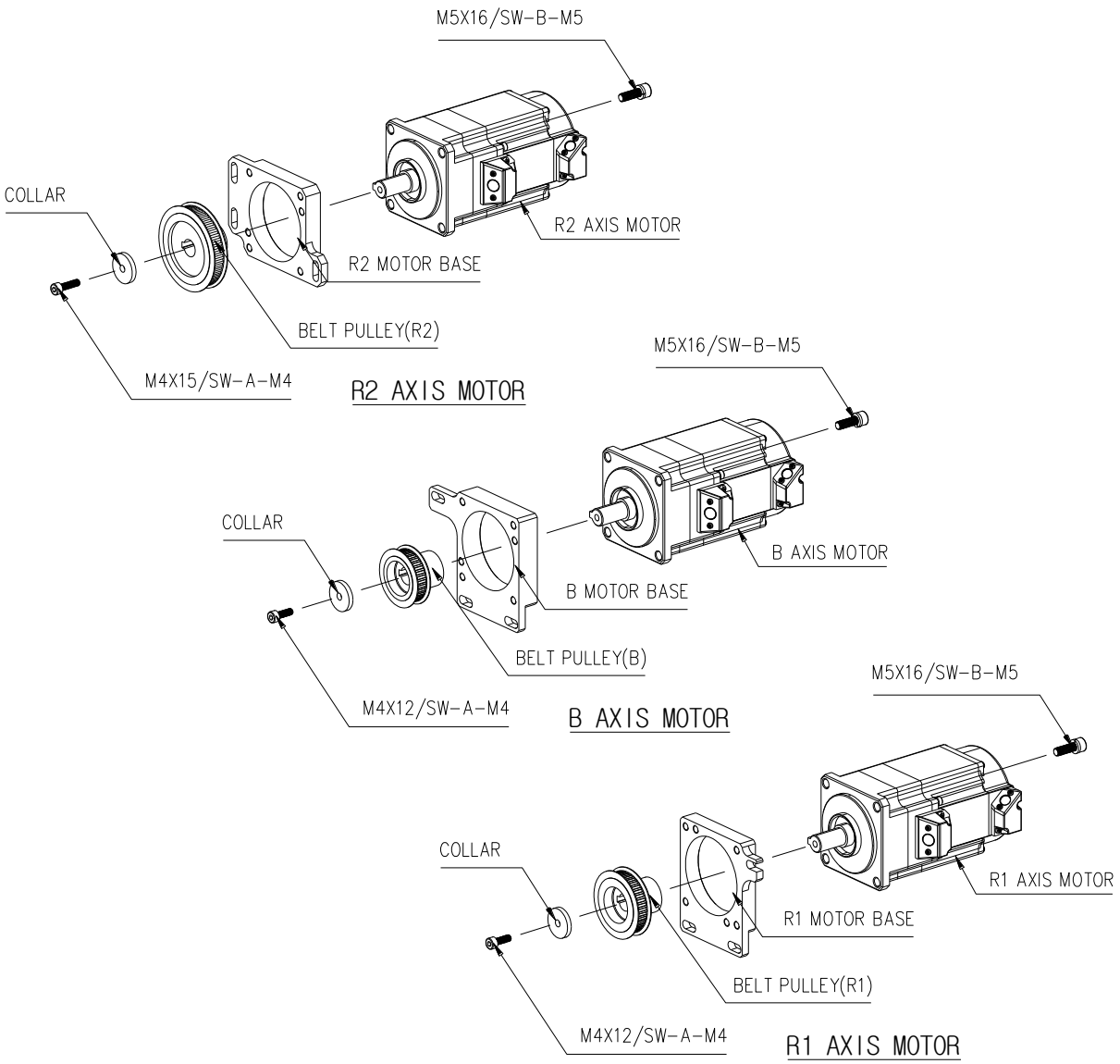

Figure 6.6 Motor Assemblies of R2, B, and R1 Axes (HDR12H-14)

6.5. Encoder Origin Setting

If the encoder data shows abnormal values because of any problems, or if the motor has been replaced, the robot's origin should be adjusted.

As a method for determining the robot's reference posture and position based on each axis, scale, V-groove, and mastering functions (options) are used. When the user replaces the motor, set the encoder using the scale, V-groove, and mastering functions (options) for setting the origin for each axis.

Precautions

For this task, there is a part that needs to be performed while in the Operation Ready [ON] state. Therefore, workers should work in a team of two, with one person ready to press the emergency stop button at any time, and the other person working quickly while paying particular attention to the robot's movements. Also, before working, please check the evacuation area.

6.5.1. Setting the Origin

(1) Set the controller to teaching mode and the Operation Ready mode to the [ON] state. If it is impossible to change the Operation Ready mode to the [ON] state, set the reference location of the robot using the brake release switch.

(2) Move each axis to the basic posture to match the scale and V-groove.

(3) Reset the encoder. For information on how to reset the encoder, please refer to "6.5.2 Encoder Reset."

(4) Compensate the encoder. Refer to "Controller Operation Manual."

(5) Check whether there are any problems with robot operation.

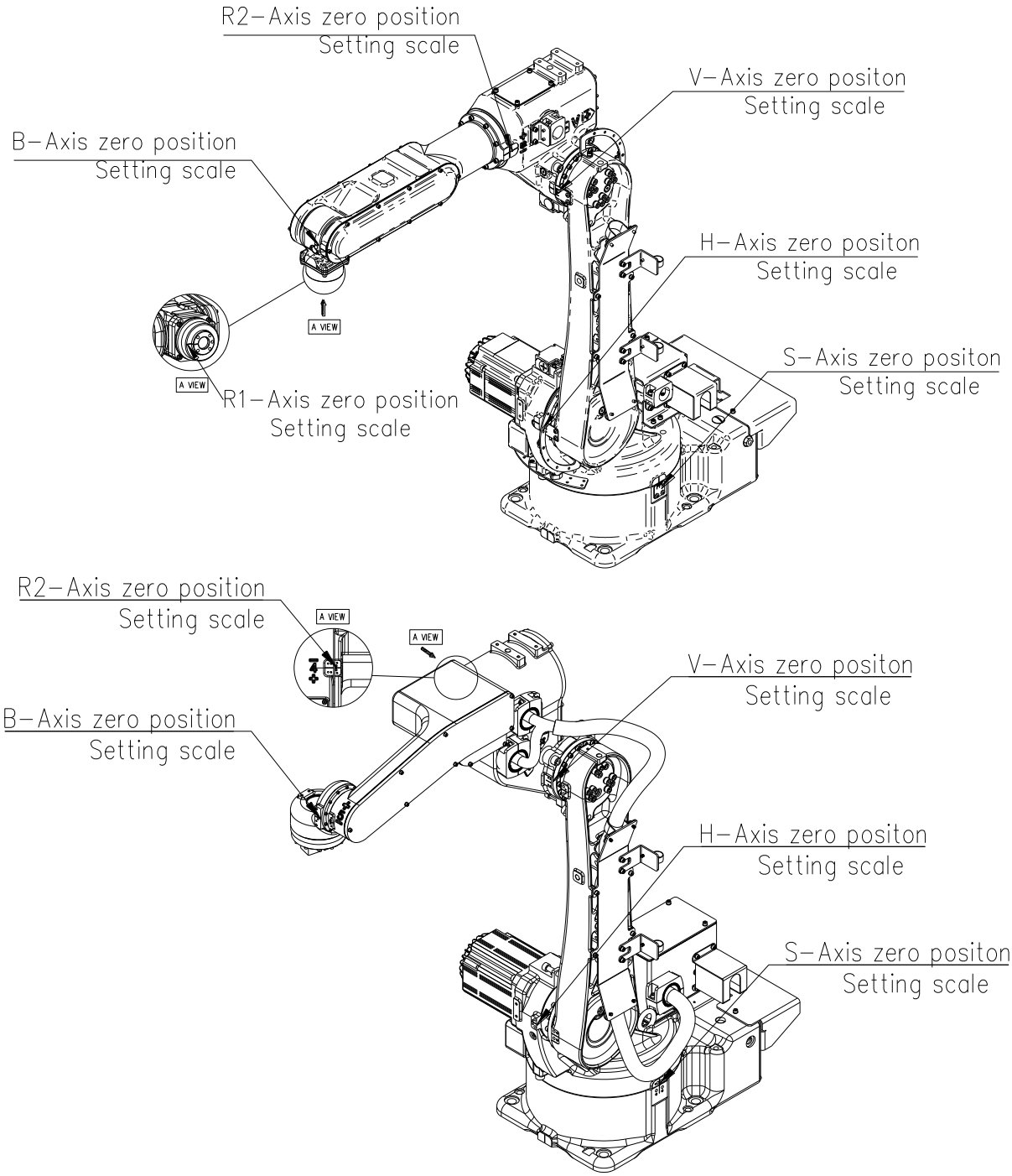

Figure 6.7 How to Set the Origin (up) HDR8-14/HDR12-14 (down) HDR12H-14

6.5.2. Encoder Resetting

(1) Turn off the motor.

(2) Opens the serial encoder reset window. ("[F2]: System" → "5: Initialization" → "4: Serial Encoder Reset")

(3) Move to the desired axis using the [↓], [↑], [SHIFT] + [←][→] keys, and then press the [Execute] key.

(4) After resetting the encoder, the user must change the controller power from the Off state to the On state.

6.5.3. Encoder Offsetting

- It is necessary to compensate the encoder data at the reference position of each axis of the robot.
- Compensate the encoder by referring to "Encoder Offset" in the controller operation manual.

[Encoder Compensation Screen]

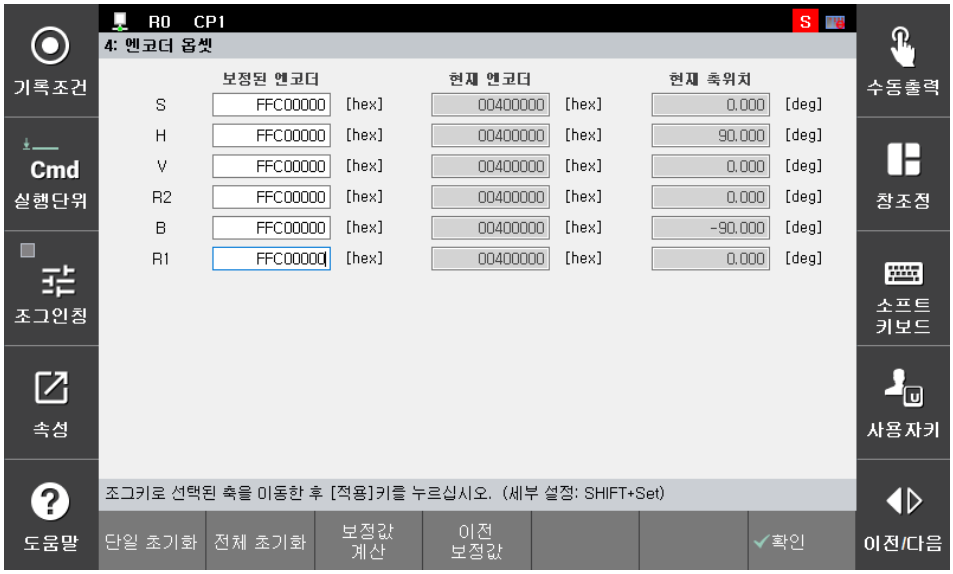

(1) Select an axis, move the axis to the reference position using the [Axis Operation] key, and press the "[F1]: Single Initialization" key.

(2) When you move all axes to the reference positions using the [Axis Operation] key and press the "[F2]: All initialization" key, the encoder offset compensation will be conducted for all axes at once.

(3) To save the settings data, press the "[F7]: OK" key. When you press the [ESC] key, the changed data will not be saved.

Precautions

When performing the encoder data compensation after replacing a motor, first turn Power Ready mode "ON," and check whether the power is supplied to the motor.

6.5.4. Mastering (Option)

When setting the robot's origin, the user can easily find it using the mastering function. Figure 6.7 shows the mastering positions and blocks for individual axes of the HDR8-14/HDR12-14 robot. For information on the robot mastering function, please refer to the "Contact Sensor-Based Robot Mastering Function Manual" provided by our company.

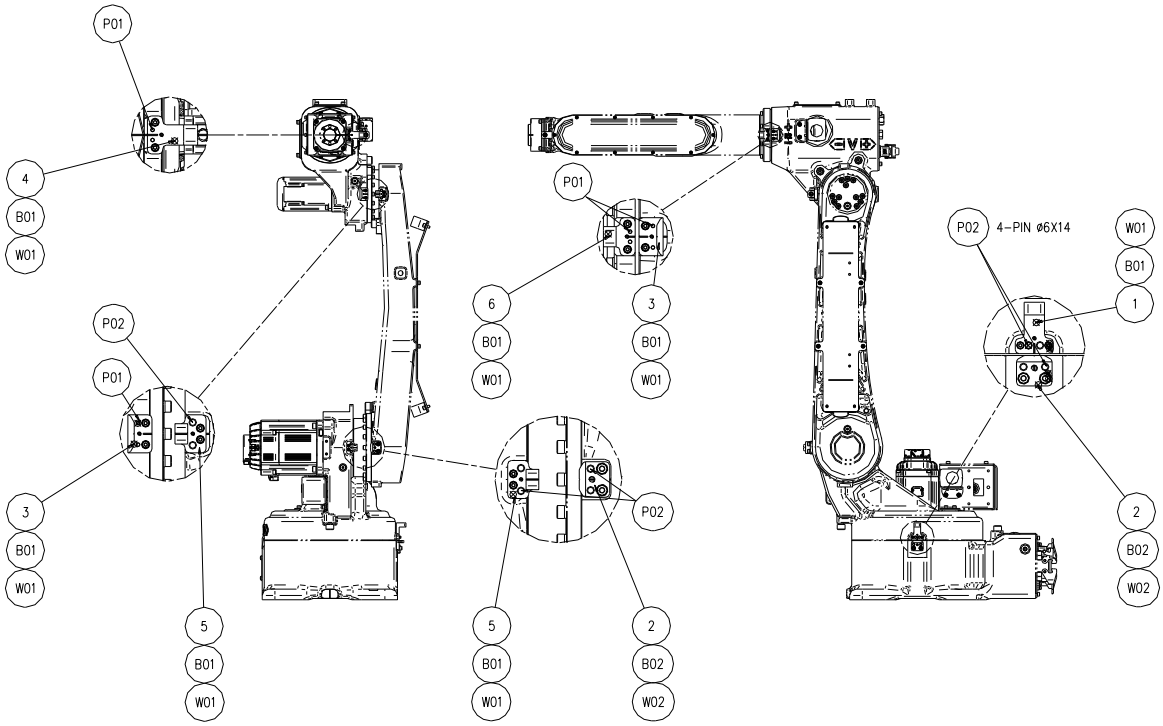

Figure 6.8 Mastering Positions and Blocks for Individual Axes(HDR8-14/HDR12-14)

Table 6-3 Table for Mastering Parts

NO.	SPECIFICATION	Q'TY
1	UA Series Mastering Block(2)	1
2	UA Series Mastering Block(3)	2
3	UA Series Mastering Block(5)	2
4	UA Series Mastering Block(7)	1
5	UA Series Mastering Block(8)	2
6	UA Series Mastering Block(10)	1
P01	PIN Ø3X10	8
P02	PIN Ø6X14	10
B01	BOLT,HEX SOCKET,M3X10L,12.9,BLACK	14
B02	BOLT,HEX SOCKET,M5X16L,12.9,BLACK	4
W01	WASHER,SPRING,M3,12.9,BLACK	14
W02	WASHER,SPRING,M5,12.9,BLACK	4

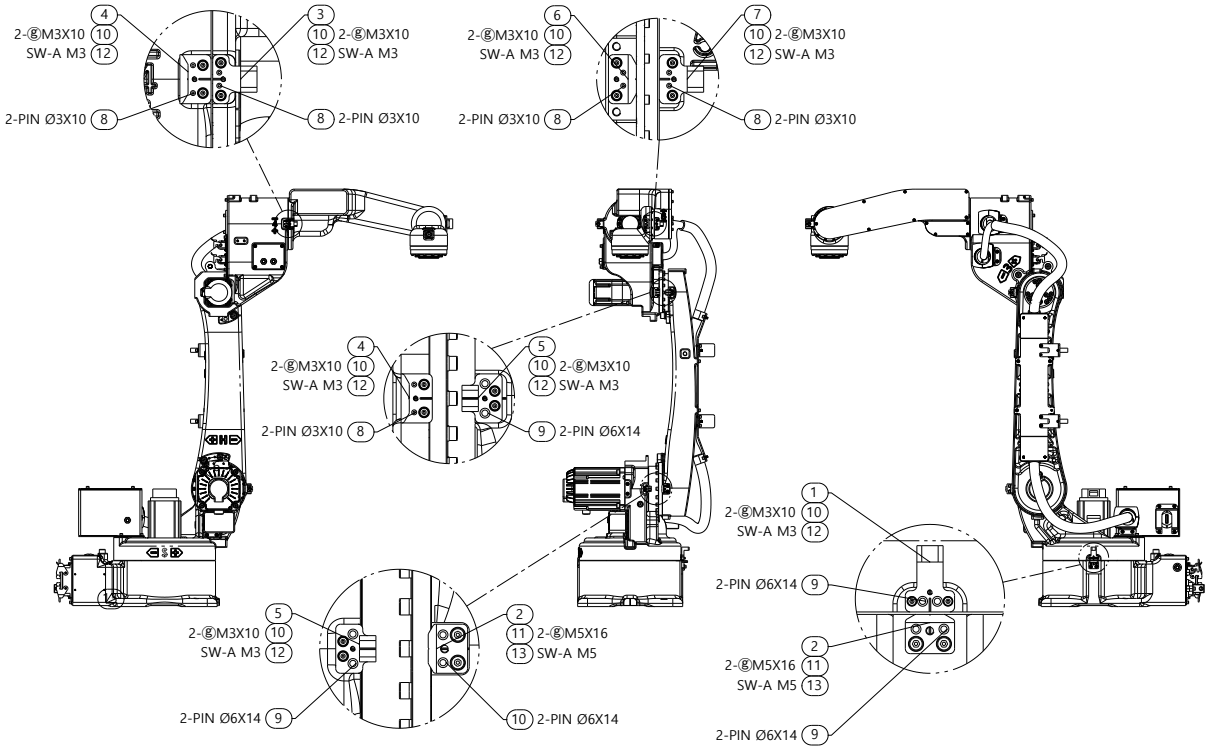

Figure 6.9 Mastering Positions and Blocks for Individual Axes (HDR12H-14)

7

Recommended Spare Parts

The following table shows the recommended spare parts for the robot. When purchasing, please check the manufacturing number and manufacturing date of the manipulator and then contact our service department.

[Classification]
A: Periodic maintenance parts (those to be replaced periodically)
Major spare parts (they are operated frequently, so it is recommended to prepare them as spare parts)
C: Main components
D: Mechanical parts

Table 7-1 List of Spare Parts

Classification	Applicable Robot	PLATE No.	Product Name and Specification	Quantity	Remarks
A	HDR8-14/HDR12-14/HDR12H-14		RV GREASE LB00 (1CAN=16KG)	1CAN	common
A	HDR8-14/HDR12-14/HDR12H-14		Sumiplex MP No.2	1CAN	common
A	HDR8-14/HDR12-14/HDR12H-14		Encoder Battery	6EA	common
B	HDR8-14/HDR12-14/HDR12H-14	PS901003033	MOTOR	1EA	S-axis
B	HDR8-14/HDR12-14/HDR12H-14	PS901003012	MOTOR	1EA	H-axis
B	HDR8-14/HDR12-14 /HDR12H-14	PS900003413	MOTOR	1EA	V-axis
B	HDR8-14/HDR12-14	PS901003037	MOTOR	1EA	R2 -axis

Classification	Applicable Robot	PLATE No.	Product Name and Specification	Quantity	Remarks
B	HDR8-14/HDR12-14	PS901003002	MOTOR	2EA	B, R1-axis
B	HDR12H-14	PS900002160	MOTOR	3EA	R2, B, R1-axis
C	HDR8-14	P7000004700	WRIST ASSY	1EA	WRIST ASSY
C	HDR12-14	P7000004740	WRIST ASSY	1EA	WRIST ASSY
C	HDR8-14/HDR12-14/HDR12H-14	P7900031960	INPUT GEAR	1EA	S-axis
C	HDR8-14/HDR12-14/HDR12H-14	P7900031970	INPUT GEAR	1EA	H-axis
C	HDR8-14/HDR12-14/HDR12H-14	P7900031980	INPUT GEAR	1EA	V-axis
C	HDR8-14/HDR12-14/HDR12H-14	PS900001700	REDUCER	1EA	S -axis
C	HDR8-14/HDR12-14/HDR12H-14	PS900001700	REDUCER	1EA	H -axis
C	HDR8-14/HDR12-14/HDR12H-14	PS900001773	REDUCER	1EA	V-axis

Classification	Applicable Robot	PLATE No.	Product Name and Specification	Quantity	Remarks
C	HDR8-14/HDR12-14	PS900001689	REDUCER	1EA	R2-axis
C	HDR8-14/HDR12-14	PS900001688	REDUCER	2EA	B-axis, R1-axis
C	HDR12H-14	PS00002836	REDUCER	1EA	R2-axis
C	HDR12H-14	PS900002788	REDUCER	1EA	B-axis
C	HDR12H-14	PS900003379	REDUCER	1EA	R1-axis
C	HDR8-14/HDR12-14	R7101560500	CABLE ASSY	1EA	CABLE ASSY
C	HDR12H-14	P7900049680	CABLE ASSY	1EA	CABLE ASSY
D	HDR8-14/HDR12-14/HDR12H-14	PS922119341	OIL SEAL	1EA	S-axis motor
D	HDR8-14/HDR12-14/HDR12H-14	PS922123611	OIL SEAL	1EA	H-axis motor
D	HDR8-14/HDR12-14/HDR12H-14	PS922115451	OIL SEAL	1EA	V -axis motor

Classification	Applicable Robot	PLATE No.	Product Name and Specification	Quantity	Remarks
D	HDR12H-14	PS922130106	OIL SEAL	1EA	R2-axis
D	HDR12H-14	PS900002779	OIL SEAL	1EA	R1-axis
D	HDR8-14/HDR12-14/HDR12H-14	PS921200141	O-RING	1EA	S -axis motor
D	HDR8-14/HDR12-14/HDR12H-14	PS921200201	O-RING	1EA	H-axis motor
D	HDR8-14/HDR12-14/HDR12H-14	PS921200091	O-RING	1EA	V -axis motor
D	HDR8-14/HDR12-14/HDR12H-14	PS921700501	O-RING	1EA	S -axis REDUCER
D	HDR8-14/HDR12-14/HDR12H-14	PS921300581	0-RING	1EA	S -axis REDUCER
D	HDR8-14/HDR12-14/HDR12H-14	PS921700501	O-RING	1EA	H-axis REDUCER
D	HDR8-14/HDR12-14/HDR12H-14	PS921300581	0-RING	1EA	H-axis REDUCER
D	HDR8-14/HDR12-14/HDR12H-14	PS921700461	O-RING	1EA	V-axis REDUCER

Classification	Applicable Robot	PLATE No.	Product Name and Specification	Quantity	Remarks
D	HDR8-14/HDR12-14/HDR12H-14	PS921300521	O-RING	1EA	V-axis REDUCER
D	HDR12H-14	PS921300590	O-RING	1EA	R2-axis REDUCER
D	HDR12H-14	PS921300520	O-RING	1EA	R2-axis REDUCER
D	HDR12H-14	PS921300500	O-RING	1EA	R2-axis flange
D	HDR12H-14	PS921300440	O-RING	1EA	B-axis REDUCER
D	HDR12H-14	PS921300510	O-RING	1EA	B-axis flange
D	HDR12H-14	PS921700370	O-RING	1EA	R1-axis REDUCER
D	HDR8-14/HDR12-14	PS903168063	BALL BEARING	2EA	R2-axis REDUCER
D	HDR8-14/HDR12-14	PS903169101	BALL BEARING	1EA	R1-axis
D	HDR8-14/HDR12-14	PS903169103	BALL BEARING	1EA	R1-axis

Classification	Applicable Robot	PLATE No.	Product Name and Specification	Quantity	Remarks
D	HDR8-14/HDR12-14	PS903168113	BALL BEARING	2EA	B-axis
D	HDR8-14/HDR12-14	PS903160023	BALL BEARING	1EA	R1-axis BEVEL GEAR
D	HDR8-14/HDR12-14	PS903160021	BALL BEARING	3EA	R1-axis BEVEL GEAR
D	HDR8-14/HDR12-14	PS903168023	BALL BEARING	1EA	B-axis REDUCER
D	HDR8-14/HDR12-14	PS903156850	BALL BEARING	2EA	B-axis REDUCER
D	HDR12H-14	PS903168133	BALL BEARING	1EA	R2-axis REDUCER
D	HDR12H-14	P7900046170	ROLLER BEARING	1EA	R2-axis REDUCER
D	HDR12H-14	PS903168051	BALL BEARING	1EA	B-axis REDUCER
D	HDR12H-14	PS903168053	BALL BEARING	1EA	B-axis REDUCER
D	HDR12H-14	PS903168003	BALL BEARING	1EA	R1-axis spline

Classification	Applicable Robot	PLATE No.	Product Name and Specification	Quantity	Remarks
D	HDR12H-14	PS903168011	BALL BEARING	1EA	R1-axis spline
D	HDR12H-14	PS903168031	BALL BEARING	2EA	R1-axis BEVEL GEAR
D	HDR8-14	P7900028590 201-3GT-6	Timing belt	1EA	R2-axis
D	HDR12-14	P7900028590 213-3GT-6	Timing belt	1EA	R2-axis
D	HDR8-14	P7900028600 549-3GT-6	Timing belt	1EA	B-axis
D	HDR12-14	P7900028640 561-3GT-6	Timing belt	1EA	B-axis
D	HDR8-14	P7900028610 396-3GT-6	Timing belt	1EA	R1-axis
D	HDR12-14	P7900028650 414-3GT-6	Timing belt	1EA	R1-axis
D	HDR12H-14	P7900044410 426-3GT-6	Timing belt	1EA	R2-axis
D	HDR12H-14	P7900044420 729-3GT-6	Timing belt	1EA	B-axis

Classification	Applicable Robot	PLATE No.	Product Name and Specification	Quantity	Remarks
D	HDR12H-14	P7900044430870-3GT-6	Timing belt	1EA	R1-axis
D	HDR8-14/HDR12-14/HDR12H-14	PS900001765	Limit Switch	3EA	S, H, V-axis (optoin)

8

Dismantle

Robots are made of various materials as shown in [Table 8-1]. To minimize their adverse effects on human health or the environment, some parts should be properly arranged and sealed.

Table 8-1 Material for Each Part

Parts	Materials
Battery	NiCad or Lithium
Wiring, Motor	Copper
Base body, A2 frame, 2nd Arm, Wrist Body etc.	Cast Iron
Brakes, Motors	Samarium Cobalt (or Neodymium)
Wiring, Connectors	Plastic / Rubber
Reducers, Bearings	Oil / Grease
1st Arm, Wrist Cover, etc.	Aluminum alloy cast

9

Diagram for the Wiring

The wiring within the manipulator branches off for each unit and is indicated in a connection diagram, so you can use it when checking or replacing the wiring.

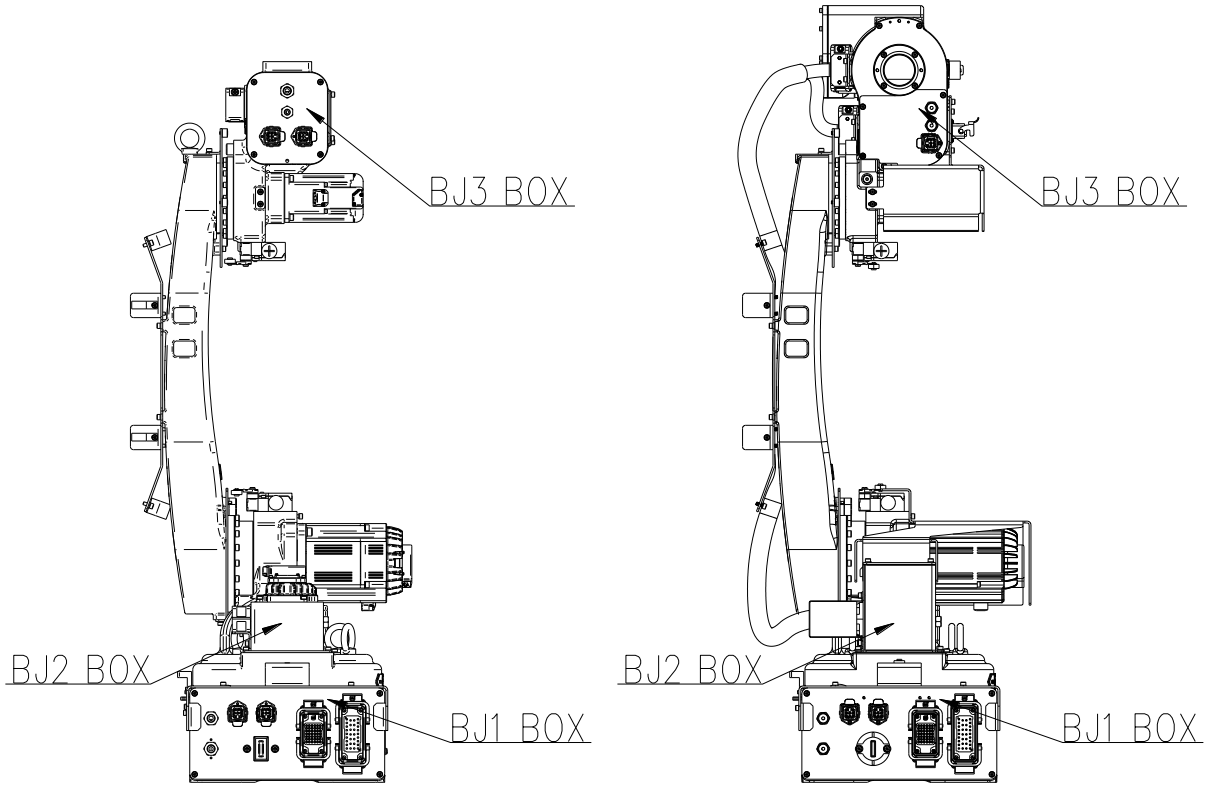

Figure 9.1 Arrangement of the Parts of the Manipulator (left) HDR8-14/HDR12-14 (right) HDR12H-14

■ 적용 로봇 MODEL : HDR8-14 / HDR12-14

Cable for ARM (HDR8-14 / HDR12-14)

(Revision No. : V01)

REVISION NO	CONTENTS	DATE
R0	INITIAL DRAWING	2022.11.28
R1	중실형 모델 R2 모터 커넥터 사양 변경	2023.03.14
R2	용접전원 케이블 옵션 사양 변경	2023.05.22
R3	용접전원 케이블 옵션 사양 원복	2023.07.04
R4	Battery 사양 수정	2023.07.26
V01	전체 케이블 도면 수정, 모델명 수정	2025.03.31

NO.	DESCRIPTION	MATERIAL (MAKER)	Q'TY	WEIGHT	REMARK

DWN	DSND	CHKD	CHKD	APPD	REASON FOR MODIFICATION	Q'TY	NO.
					도면 오류 변경 및 너이밍 변경	-	05
김덕하 2023.07.26	김덕하 2023.07.26			김덕하 2023.07.26	Battery 사양 수정	-	04
김덕하 2023.07.11	김덕하 2023.07.11			김덕하 2023.07.11	용접전원 케이블 옵션 원복	-	03
김덕하 2022.12.26	김덕하 2022.12.26			유재성 2022.12.25	First Issue	-	0

SCALE 1/1	PROJECT	1 SET	CC A
UNIT NO. 6202	TITLE CABLE UA/UH SERIES CABLE FOR ARM	DWG NO. P7000003850-05	Sheet 1/9
INFO NO. 62-02-A000			
PAINTING INNER COLOR OL PROOF / OUTER COLOR OL PROOF	W/O NO.	HD HYUNDAI ROBOTICS	

CC : Confidential Code

(420x297mm)

■ HDR8-14/HDR12-14 Diagram for the Wiring

GENERAL TOLERANCE UNLESS NOTED Satisfied with Length & Thickness (길이와 두께 공차 동시 만족 조건)					
SAND CASTING + (사형주조)		FCD45		AC4C	
		C1 정밀	C2 보통	C1 정밀	C2 보통
LENGTH	≤10	1.5	2	0.3	0.9
	~25	1.5	2	0.4	1.0
	~50	1.5	2	0.5	1.1
	~125	1.5	2	0.7	1.2
	~250	2	2.5	0.9	1.4
	~400	2.5	3.5	1.1	1.8
	~800	4	5	1.6	2.5
	~1600	5	7	-	4
	~3150	-	10	-	7
THICKNESS	≤6	1.2	2	0.6	1.2
	~10	1.2	2	0.7	1.4
	~16	1.5	2.5	0.8	1.6
	~30	2	3	0.9	1.8
	~50	2.5	4	1.0	2.2

MACHINING 二	F 정밀	M 보통
0.5~3	0.05	0.1
~6	0.05	0.1
~30	0.1	0.2
~120	0.15	0.3
~400	0.2	0.5
~1M	0.3	0.8
~2M	0.5	1.2
~4M	-	2

WELDING 土	LENGTH		GEOMETRIC	
	A 정밀	B 보통	F 정밀	F 보통
2~30	1	1	-	-
~120	1	2	0.5	1
~400	1	2	1	1.5
~1M	2	3	1.5	3
~2M	3	4	2	4.5
~4M	4	6	3	6
~8M	5	8	4	8

STANDARD FOR SURFACE ROUGHNESS	
MARKS	Rz
~	▽
▽	Rz 100
▽▽	Rz 25
▽▽▽	Rz 6.3
▽▽▽▽	Rz 0.8

호칭	피치	드릴경	HILI-COIL 드릴경
M2	0.40	1.60	2.1
M3	0.50	2.50	3.15
M4	0.70	3.30	4.2
M5	0.80	4.20	5.2
M6	1.00	5.00	6.25
M8	1.25	6.80	8.3
M10	1.50	8.50	10.5
M12	1.75	10.20	12.5
M14	2.00	12.00	14.5
M16	2.00	14.00	16.5
M18	2.50	15.50	18.75
M20	2.50	17.50	20.75

NO.	DESCRIPTION	MATERIAL (MAKER)	Q'TY	WEIGHT	REMARK

변 경 이 력 표
ALTERATION LIST

No.	작성일 Date	담 당 Design	변 경 내 용 변 경 전	변 경 내 용 변 경 후	Revision No.	비 고 REMARK
1	2022. 11. 28	유재상		INITIAL DRAWING.	R0	
2	2023. 03. 14	유재상		중실형 모델 R2모터 커넥터 사양 변경	R1	
3	2023. 05. 22	김덕하		용접전원 케이블 옵션 사양 변경	R2	
4	2023. 07. 04	김덕하		용접전원 케이블 옵션 사양 원복	R3	
5	2023. 07. 26	김덕하		Battery 사양 수정	R4	
V01 6	2031. 03. 31	김익진		모델명 수정, 일부 선 길이 수정	V01	
7						
8						
9						
10						
11						
12						
13						
14						
15						
16						
17						
18						
19						
20						

DWN	DSND	CHKD	CHKD	APPD	REASON FOR MODIFICATION	Q'TY	NO.
					도면 오류 변경 및 너이밍 교정	-	05
김덕하 2023.07.26	김덕하 2023.07.26			김덕하 2023.07.26	Battery 사양 수정	-	04
김덕하 2023.07.11	김덕하 2023.07.11			김덕하 2023.07.11	용접전원 케이블 옵션 원복	-	03
김덕하 2022.12.26	김덕하 2022.12.26			유재상 2022.12.26	First Issue	-	0

SCALE 1/1	PROJECT	1 SET	CC A
UNIT NO. 6202	TITLE CABLE UA/UH SERIES CABLE FOR ARM	DWG NO. P7000003850-05	Sheet 2/9
INFO NO. 62-02-A000			
PAINTING INNER COLOR / OUTER COLOR	W/O NO.		

CC : Confidential Code

HD HYUNDAI ROBOTICS

THIS DRAWING CONTAINS CONFIDENTIAL PROPRIETARY INFORMATION. HENC, THE REPRODUCTION, TRANSFER AND/OR UTILIZATION IN WHOLE OR IN PART ARE PROHIBITED WITHOUT THE WRITTEN PERMISSION OF HD HYUNDAI ROBOTICS CO., LTD.

A3 (420x297mm)

NO.	DESCRIPTION	MATERIAL (MAKER)	Q'TY	WEIGHT	REMARK

적용 모델 : HDR8-14/HDR12-14

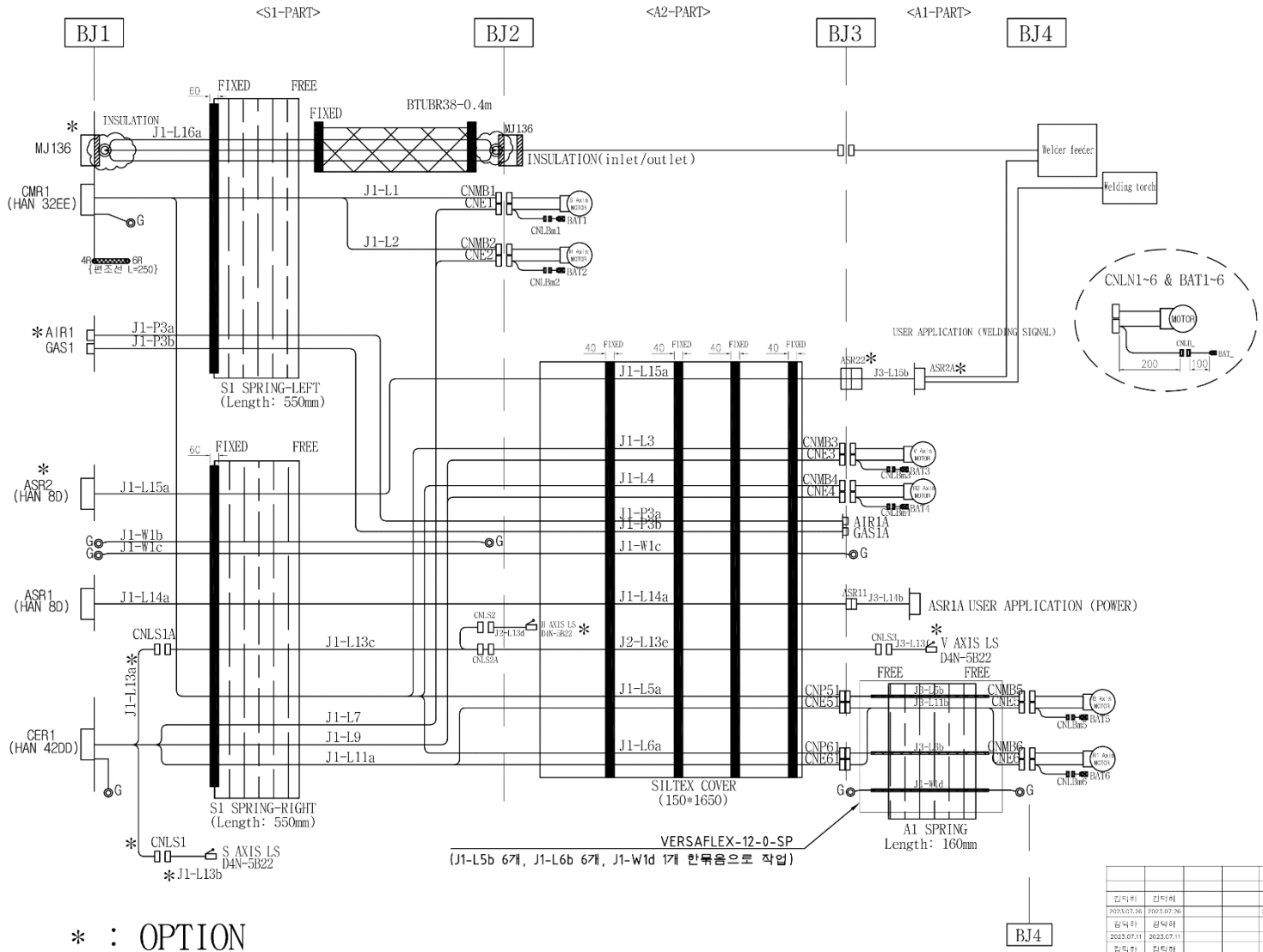

* : OPTION

					도면 오류 변경 및 너이밍 변경	-	05
김덕하	김덕하			김덕하	Battery 사양 수정	-	04
2023.07.26	2023.07.26			2023.07.26			
김덕하	김덕하			김덕하	용접신원 케이블 옵션 원복	-	03
2023.07.11	2023.07.11			2023.07.11			
김덕하	김덕하			유재실	First Issue	-	0
2022.12.26	2022.12.26			2022.12.26			
DWN	DSND	CHKD	CHKD	APPD	REASON FOR MODIFICATION	Q'TY	NO.

SCALE 1/1	PROJECT	1 SET	CC A
UNIT NO. 6202	TITLE CABLE UA/UH SERIES CABLE FOR ARM	DWG NO. P7000003850-05	Sheet 3/9
INFO NO. 62-02-A000			
PAINTING INNER COLOR / OUTER COLOR	W/O NO.	HD HYUNDAI ROBOTICS	

CC : Confidential Code

GENERAL TOLERANCE UNLESS NOTED Satisfied with Length & Thickness (길이와 두께 공차 동시 만족 조건)					
SAND CASTING ± (사동주조)		FCD45		AC4C	
		C1 정밀	C2 보통	C1 정밀	C2 보통
LENGTH	≤10	1.5	2	0.3	0.9
	~25	1.5	2	0.4	1.0
	~50	1.5	2	0.5	1.1
	~120	1.5	2	0.7	1.2
	~250	2	2.5	0.9	1.4
	~400	2.5	3.5	1.1	1.8
	~800	4	5	1.6	2.5
	~1000	5	7	-	4
	~1500	-	10	-	7
THICKNESS	≤6	1.2	2	0.6	1.2
	~10	1.2	2	0.7	1.4
	~18	1.5	2.5	0.8	1.6
	~30	2	3	0.9	1.8
	~50	2.5	4	1.0	2.2

MACHINING ±	F 정밀	M 보통
0.5~3	0.05	0.1
~6	0.05	0.1
~30	0.1	0.2
~120	0.15	0.3
~400	0.2	0.5
~1M	0.3	0.8
~2M	0.5	1.2
~4M	-	2

WELDING ±	LENGTH A 정밀	LENGTH B 보통	GEOMETRIC F 정밀	GEOMETRIC F 보통
2~30	1	1	-	-
~120	1	2	0.5	1
~400	1	2	1	1.5
~1M	2	3	1.5	3
~2M	3	4	2	4.5
~4M	4	6	3	6
~8M	5	8	4	8

STANDARD FOR SURFACE ROUGHNESS	
MARKS	Rz
~	
▽	Rz 100
▽▽	Rz 25
▽▽▽	Rz 6.3
▽▽▽▽	Rz 0.8

호칭	피치	드릴경	HIB-COIL 드릴경
M2	0.40	1.60	2.1
M3	0.50	2.50	3.15
M4	0.70	3.30	4.2
M5	0.80	4.20	5.2
M6	1.00	5.00	6.25
M8	1.25	6.60	8.3
M10	1.50	8.50	10.5
M12	1.75	10.20	12.5
M14	2.00	12.00	14.5
M16	2.00	14.00	16.5
M18	2.50	15.50	18.75
M20	2.50	17.50	20.75

THIS DRAWING CONTAINS CONFIDENTIAL PROPRIETARY INFORMATION. HENC, THE REPRODUCTION, TRANSFER AND/OR UTILIZATION IN WHOLE OR IN PART ARE PROHIBITED WITHOUT THE WRITTEN PERMISSION OF HD HYUNDAI ROBOTICS CO., LTD.

A3 (420x297mm)

적용 모델 : HDR8-14/HDR12-14

GENERAL TOLERANCE UNLESS NOTED Satisfied with Length & Thickness (길이와 두께 공차 동시 만족 조건)					
SAND CASTING + (사형주조)		FCD45		AC4C	
		C1 정밀	C2 보통	C1 정밀	C2 보통
LENGTH	≤10	1.5	2	0.3	0.9
	~25	1.5	2	0.4	1.0
	~50	1.5	2	0.5	1.1
	~125	1.5	2	0.7	1.2
	~250	2	2.5	0.9	1.4
	~400	2.5	3.5	1.1	1.8
	~800	4	5	1.6	2.5
	~1600	5	7	-	4
	~3150	-	10	-	7
THICKNESS	≤6	1.2	2	0.6	1.2
	~10	1.2	2	0.7	1.4
	~18	1.5	2.5	0.8	1.6
	~30	2	3	0.9	1.8
	~50	2.5	4	1.0	2.2

MACHINING ≡	F 정밀	M 보통
0.5~3	0.05	0.1
~6	0.05	0.1
~30	0.1	0.2
~120	0.15	0.3
~400	0.2	0.5
~1M	0.3	0.8
~2M	0.5	1.2
~4M	-	2

WELDING ⊥	LENGTH A 정밀	LENGTH B 보통	GEOMETRIC F 정밀	GEOMETRIC F 보통
2~30	1	1	1	-
~120	1	2	0.5	1
~400	1	2	1	1.5
~1M	2	3	1.5	3
~2M	3	4	2	4.5
~4M	4	6	3	6
~8M	5	8	4	8

STANDARD FOR SURFACE ROUGHNESS	
MARKS	Rz
~	▽
▽	Rz 100
▽▽	Rz 25
▽▽▽	Rz 6.3
▽▽▽▽	Rz 0.8

호칭	피치	드릴경	HILI-COIL 드릴경
M2	0.40	1.60	2.1
M3	0.50	2.50	3.15
M4	0.70	3.30	4.2
M5	0.80	4.20	5.2
M6	1.00	5.00	6.25
M8	1.25	6.80	8.3
M10	1.50	8.50	10.5
M12	1.75	10.20	12.5
M14	2.00	12.00	14.5
M16	2.00	14.00	16.5
M18	2.50	15.50	18.75
M20	2.50	17.50	20.75

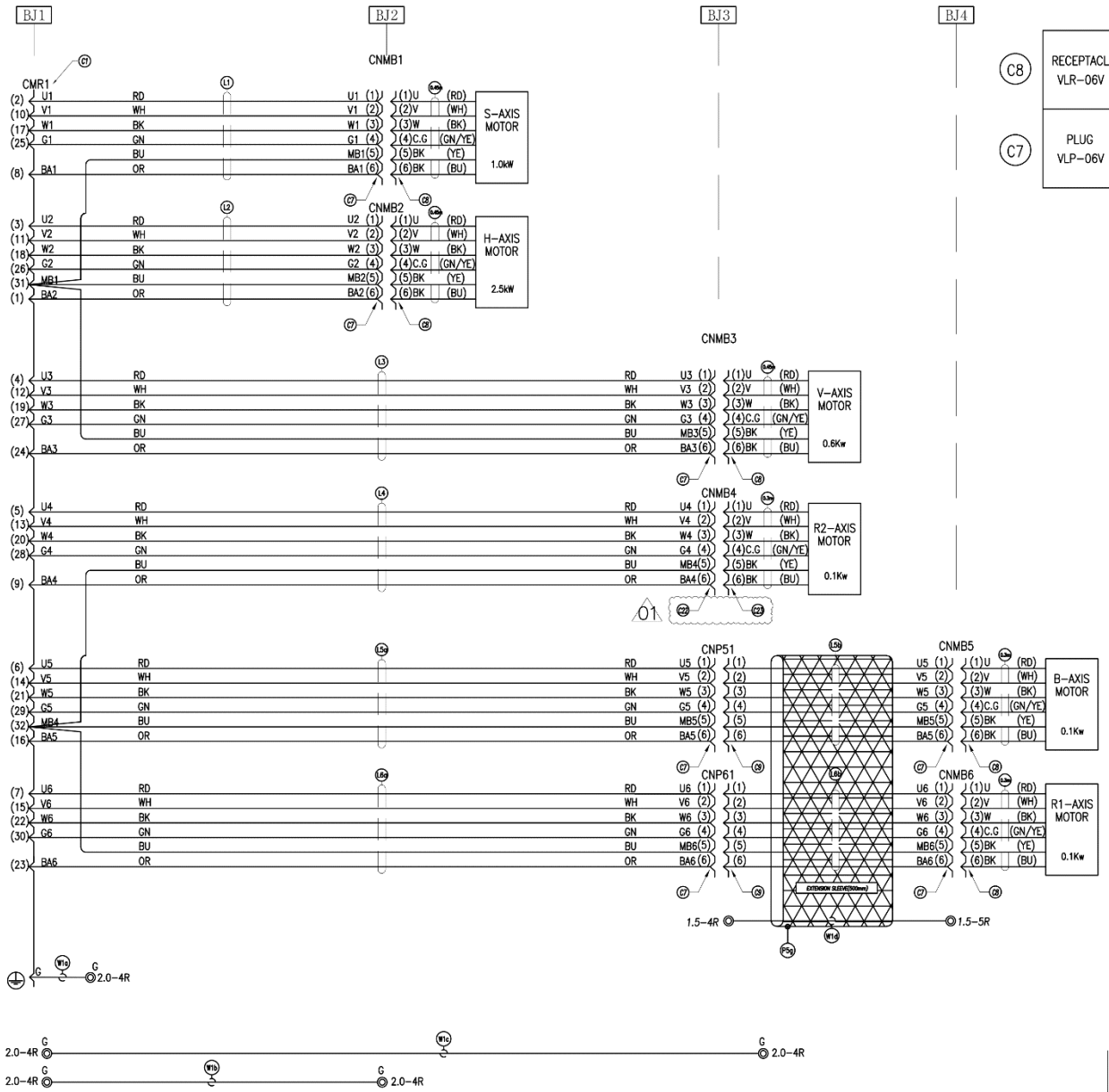

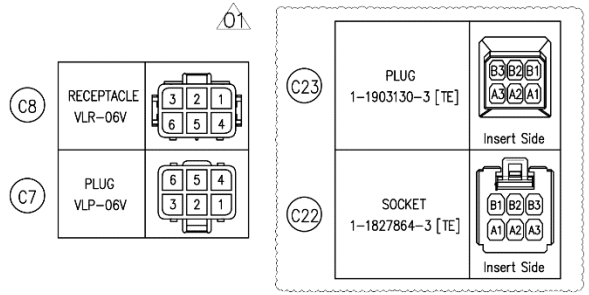

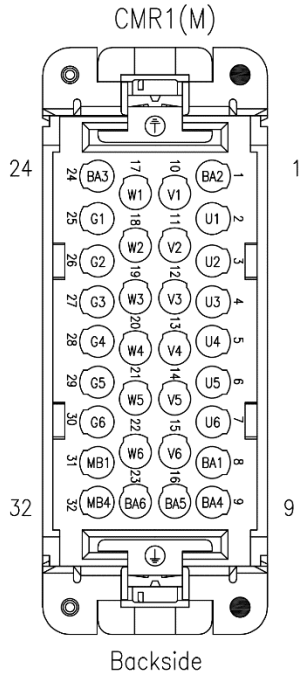

NO.	DESCRIPTION	MATERIAL (MAKER)	Q'TY	WEIGHT	REMARK

DWN	DSND	CHKD	CHKD	APPD	REASON FOR MODIFICATION	Q'TY	NO.
					도면 오류 변경 및 너이밍 변경	-	05
김덕하 2023.07.26	김덕하 2023.07.26			김덕하 2023.07.26	Battery 사양 수정	-	04
김덕하 2023.07.11	김덕하 2023.07.11			김덕하 2023.07.11	용접신원 케이블 옵션 원복	-	03
김덕하 2022.12.26	김덕하 2022.12.26			유재심 2022.12.26	First Issue	-	0

SCALE 1/1	PROJECT	1 SET	CC A
UNIT NO. 6202	TITLE CABLE UA/UH SERIES CABLE FOR ARM	DWG NO. P7000003850-05	Sheet 4/9
INFO NO. 62-02-A000			
PAINTING INNER COLOR / OUTER COLOR	W/O NO.		

CC : Confidential Code

HD HYUNDAI ROBOTICS

THIS DRAWING CONTAINS CONFIDENTIAL PROPRIETARY INFORMATION. HENC, THE REPRODUCTION, TRANSFER AND/OR UTILIZATION IN WHOLE OR IN PART ARE PROHIBITED WITHOUT THE WRITTEN PERMISSION OF HD HYUNDAI ROBOTICS CO., LTD.

A3 (420x297mm)

적용 모델 : HDR8-14/HDR12-14

GENERAL TOLERANCE UNLESS NOTED Satisfied with Length & Thickness (길이와 두께 공차 동시 만족 조건)					
SAND CASTING ± (사출주조)		FCD45		AC4C	
		C1 정밀	C2 보통	C1 정밀	C2 보통
LENGTH	≤10	1.5	2	0.3	0.9
	~25	1.5	2	0.4	1.0
	~50	1.5	2	0.5	1.1
	~125	1.5	2	0.7	1.2
	~250	2	2.5	0.9	1.4
	~400	2.5	3.5	1.1	1.8
	~800	4	5	1.6	2.5
	~1000	5	7	-	4
	~1500	-	10	-	7
THICKNESS	≤6	1.2	2	0.6	1.2
	~10	1.2	2	0.7	1.4
	~18	1.5	2.5	0.8	1.6
	~30	2	3	0.9	1.8
	~50	2.5	4	1.0	2.2

MACHINING ±	F 정밀	M 보통
0.5~3	0.05	0.1
~6	0.05	0.1
~30	0.1	0.2
~120	0.15	0.3
~400	0.2	0.5
~1M	0.3	0.8
~2M	0.5	1.2
~4M	-	2

WELDING ±	LENGTH A 정밀	LENGTH B 보통	GEOMETRIC F 정밀	GEOMETRIC F 보통
2~30	1	1	-	-
~120	1	2	0.5	1
~400	1	2	1	1.5
~1M	2	3	1.5	3
~2M	3	4	2	4.5
~4M	4	6	3	6
~8M	5	8	4	8

STANDARD FOR SURFACE ROUGHNESS	
MARKS	Rz
~	
▽	Rz 100
▽▽	Rz 25
▽▽▽	Rz 6.3
▽▽▽▽	Rz 0.8

호칭	피치	드릴경	HBI-COIL 드릴경
M2	0.40	1.60	2.1
M3	0.50	2.50	3.15
M4	0.70	3.30	4.2
M5	0.80	4.20	5.2
M6	1.00	5.00	6.25
M8	1.25	6.60	8.3
M10	1.50	8.50	10.5
M12	1.75	10.20	12.5
M14	2.00	12.00	14.5
M16	2.00	14.00	16.5
M18	2.50	15.50	18.75
M20	2.50	17.50	20.75

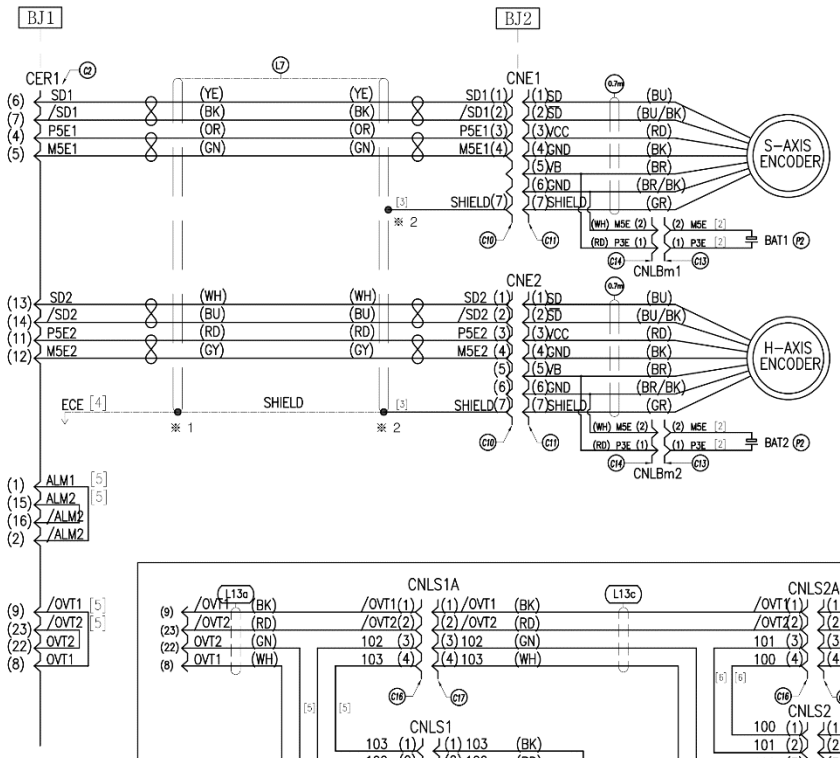

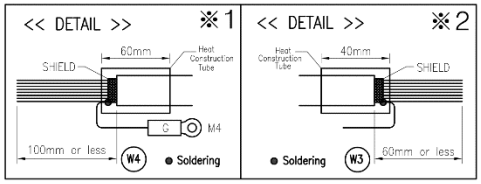

[2] UL1007 24AWG(BU) : 0.15m
[3] UL1007 24AWG(WH) : 0.06m
[4] UL1430 COIRV 0.75sq(WH) : 0.1m
[5] UL1007 24AWG(BU) : 0.2m
[6] UL1007 24AWG(BU) : 0.2m

CER1(Male)

Backside

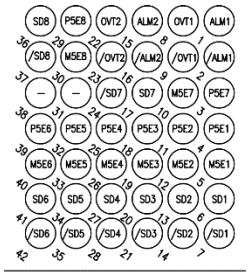

C17	RECEPTACLE SMR-04V-B	
C16	PLUG SMP-04V-BC	
C14	RECEPTACLE SMR-02V-B	
C13	PLUG SMP-02V-BC	
C11	RECEPTACLE SMR-07V-B	
C10	PLUG SMP-07V-BC	

LIMIT SWITCH TYPE

USE	TYPE	CABLE 방향
S-AXIS (P1a)	D4N-5B22	
H-AXIS (P1a)	D4N-5B22	
V-AXIS (P1a)	D4N-5B22	

CER1(M)

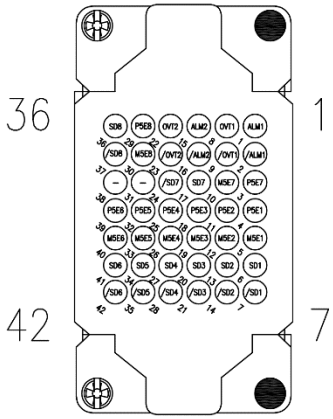

Backside

NO.	DESCRIPTION	MATERIAL (MAKER)	Q'TY	WEIGHT	REMARK

DWN	DSND	CHKD	CHKD	APPD	REASON FOR MODIFICATION	Q'TY	NO.
					도면 오류 변경 및 너이밍 변경	-	05
김덕하 2023.07.26	김덕하 2023.07.26			김덕하 2023.07.26	Battery 사양 수정	-	04
김덕하 2023.07.11	김덕하 2023.07.11			김덕하 2023.07.11	용산신원 케이블 옵션 원복	-	03
김덕하 2022.12.26	김덕하 2022.12.26			유재실 2022.12.26	First Issue	-	0

SCALE 1/1	PROJECT	1 SET	CC A
UNIT NO. 6202	TITLE CABLE UA/UH SERIES CABLE FOR ARM	DWG NO. P7000003850-05	Sheet 5/9
INFO NO. 62-02-A000			
PAINTING INNER COLOR OL-7800T / OUTER COLOR OL-7800T	W/O NO.	HD HYUNDAI ROBOTICS	

CC : Confidential Code

THIS DRAWING CONTAINS CONFIDENTIAL PROPRIETARY INFORMATION. HENC, THE REPRODUCTION, TRANSFER AND/OR UTILIZATION IN WHOLE OR IN PART ARE PROHIBITED WITHOUT THE WRITTEN PERMISSION OF HD HYUNDAI ROBOTICS CO., LTD.

A3 (420x297mm)

GENERAL TOLERANCE UNLESS NOTED Satisfied with Length & Thickness (길이와 두께 공차 동시 만족 조건)					
SAND CASTING + (사형주조)		FCD45		AC4C	
		C1 정밀	C2 보통	C1 정밀	C2 보통
LENGTH	≤10	1.5	2	0.3	0.9
	~25	1.5	2	0.4	1.0
	~50	1.5	2	0.5	1.1
	~125	1.5	2	0.7	1.2
	~250	2	2.5	0.9	1.4
	~400	2.5	3.5	1.1	1.8
	~800	4	5	1.6	2.5
	~1600	5	7	-	4
	~3150	-	10	-	7
THICKNESS	≤6	1.2	2	0.6	1.2
	~10	1.2	2	0.7	1.4
	~16	1.5	2.5	0.8	1.6
	~30	2	3	0.9	1.8
	~50	2.5	4	1.0	2.2

MACHINING 二	F 정밀	M 보통
0.5~3	0.05	0.1
~6	0.05	0.1
~30	0.1	0.2
~120	0.15	0.3
~400	0.2	0.5
~1M	0.3	0.8
~2M	0.5	1.2
~4M	-	2

WELDING 土	LENGTH A 정밀	LENGTH B 보통	GEOMETRIC E 정밀	GEOMETRIC F 보통
2~30	1	1	1	-
~120	1	2	0.5	1
~400	1	2	1	1.5
~1M	2	3	1.5	3
~2M	3	4	2	4.5
~4M	4	6	3	6
~8M	5	8	4	8

STANDARD FOR SURFACE ROUGHNESS	
MARKS	Rz
~	▽
▽	▽ Rz 100
▽▽	▽ Rz 25
▽▽▽	▽ Rz 6.3
▽▽▽▽	▽ Rz 0.8

호칭	피치	드릴경	HELICOIL 드릴경
M2	0.40	1.60	2.1
M3	0.50	2.50	3.15
M4	0.70	3.30	4.2
M5	0.80	4.20	5.2
M6	1.00	5.00	6.25
M8	1.25	6.80	8.3
M10	1.50	8.50	10.5
M12	1.75	10.20	12.5
M14	2.00	12.00	14.5
M16	2.00	14.00	16.5
M18	2.50	15.50	18.75
M20	2.50	17.50	20.75

적용 모델 : HDR8-14/HDR12-14

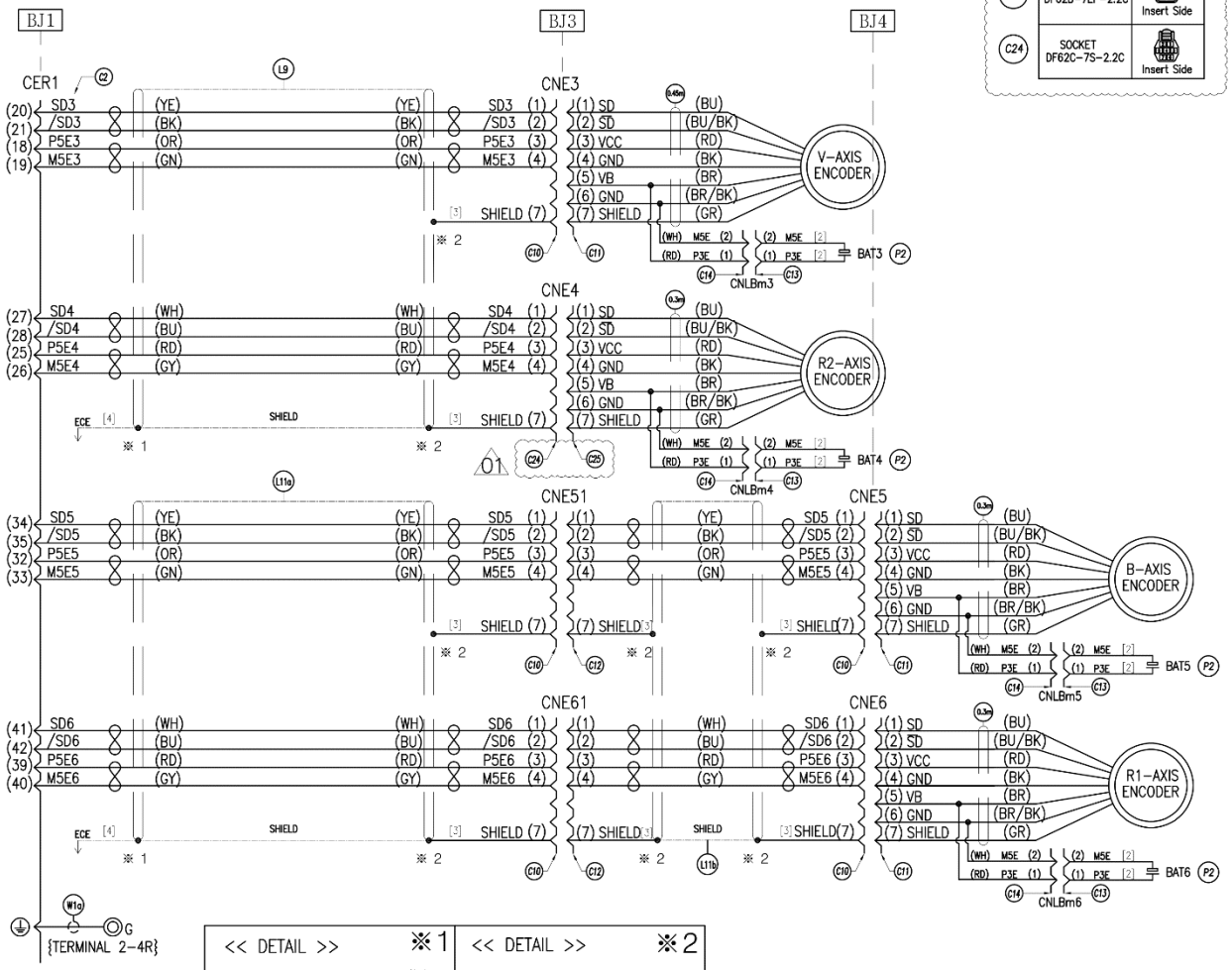

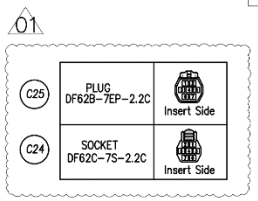

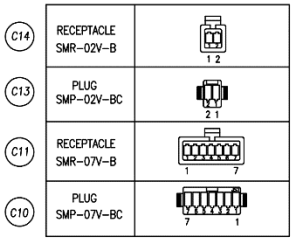

CER1(Male)
Backside

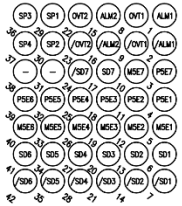

CER1(M)

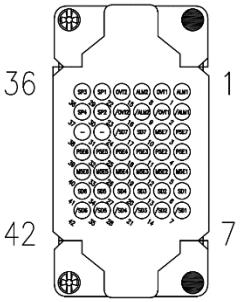

Backside

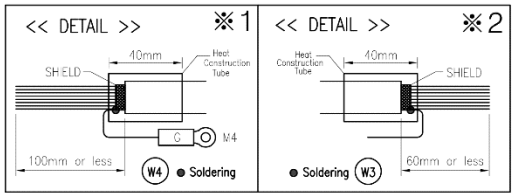

[2] UL1007 24AWG(BU) : 0.15m
[3] UL1007 24AWG(WH) : 0.06m
[4] UL1430 COIRV 0.75sq(WH) : 0.1m
[5] UL1007 24AWG(BU) : 0.2m
[6] UL1007 24AWG(BU) : 0.2m

NO.	DESCRIPTION	MATERIAL (MAKER)	Q'TY	WEIGHT	REMARK

DWN	DSND	CHKD	CHKD	APPD	REASON FOR MODIFICATION	Q'TY	NO.
					도면 오류 변경 및 너이밍 변경	-	05
김덕하 2023.07.26	김덕하 2023.07.26			김덕하 2023.07.26	Battery 사양 수정	-	04
김덕하 2023.07.11	김덕하 2023.07.11			김덕하 2023.07.11	용접신원 케이블 옵션 원복	-	03
김덕하 2022.12.26	김덕하 2022.12.26			유재심 2022.12.26	First Issue	-	0

SCALE 1/1	PROJECT	1 SET	CC A
UNIT NO. 6202	TITLE CABLE UA/UH SERIES CABLE FOR ARM	DWG NO. P7000003850-05	Sheet 6/9
INFO NO. 62-02-A000			
PAINTING INNER COLOR / OUTER COLOR	W/O NO.		

CC : Confidential Code

HD HYUNDAI ROBOTICS

THIS DRAWING CONTAINS CONFIDENTIAL PROPRIETARY INFORMATION. HENC, THE REPRODUCTION, TRANSFER AND/OR UTILIZATION IN WHOLE OR IN PART ARE PROHIBITED WITHOUT THE WRITTEN PERMISSION OF HD HYUNDAI ROBOTICS CO., LTD.

A3 (420x297mm)

적용 모델 :HDR8-14/HDR12-14

NO.	DESCRIPTION	MATERIAL (MAKER)	Q'TY	WEIGHT	REMARK

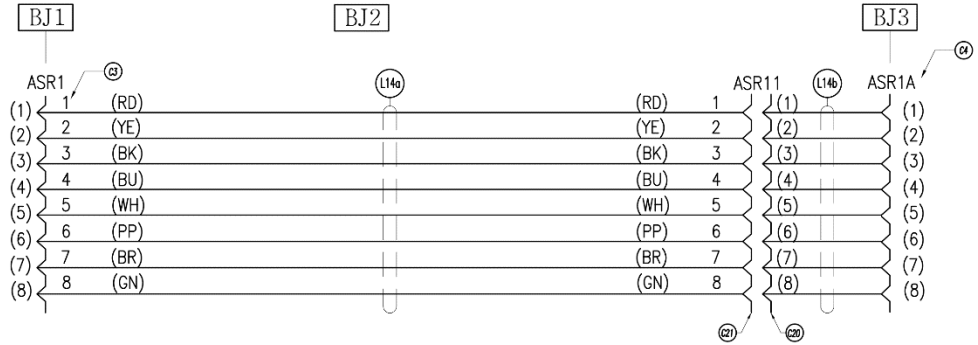

C20	RECEPTACLE VLR-08V	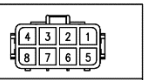
C21	PLUG VLP-08V	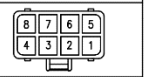
C11a	RECEPTACLE SMR-07V-B	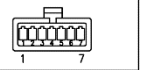
C10a	PLUG SMP-07V-BC	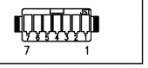

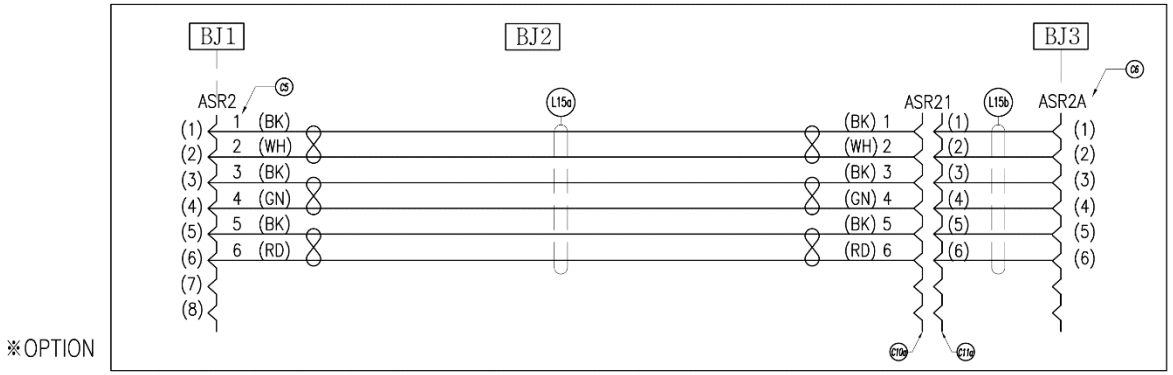

※OPTION

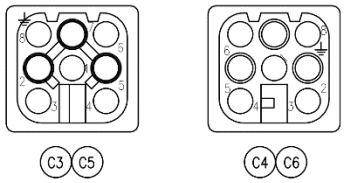

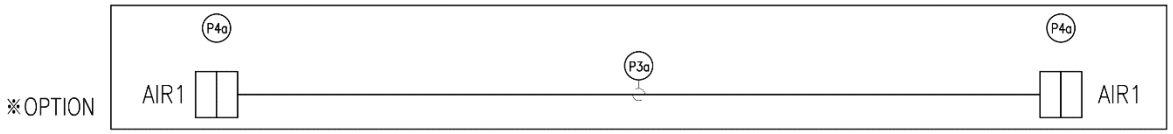

※OPTION

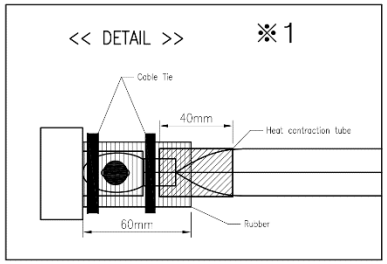

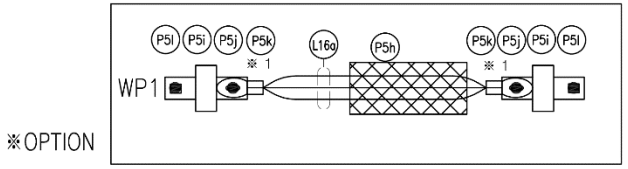

※OPTION

DWN	DSND	CHKD	CHKD	APPD	REASON FOR MODIFICATION	Q'TY	NO.
					도면 오류 변경 및 너이밍 변경	-	05
김덕하 2023.07.26	김덕하 2023.07.26			김덕하 2023.07.26	Battery 사양 수정	-	04
김덕하 2023.07.11	김덕하 2023.07.11			김덕하 2023.07.11	용산신원 케이블 옵션 원복	-	03
김덕하 2022.12.26	김덕하 2022.12.26			유재실 2022.12.26	First Issue	-	0

SCALE 1/1	PROJECT	1 SET	CC A
UNIT NO. 6202	TITLE CABLE UA/UH SERIES CABLE FOR ARM	DWG NO. P7000003850-05	Sheet 7/9
INFO NO. 62-02-A000			
PAINTING INNER COLOR OL-7800T / OUTER COLOR OL-7800T	W/O NO.	HD HYUNDAI ROBOTICS	

CC : Confidential Code

GENERAL TOLERANCE UNLESS NOTED Satisfied with Length & Thickness (길이와 두께 공차 동시 만족 조건)					
SAND CASTING + (사출주조)		FCD45		AC4C	
		C1 정밀	C2 보통	C1 정밀	C2 보통
LENGTH	≤10	1.5	2	0.3	0.9
	~25	1.5	2	0.4	1.0
	~50	1.5	2	0.5	1.1
	~120	1.5	2	0.7	1.2
	~250	2	2.5	0.9	1.4
	~400	2.5	3.5	1.1	1.8
	~800	4	5	1.6	2.5
	~1000	5	7	-	4
	~1500	-	10	-	7
THICKNESS	≤6	1.2	2	0.6	1.2
	~10	1.2	2	0.7	1.4
	~18	1.5	2.5	0.8	1.6
	~30	2	3	0.9	1.8
	~50	2.5	4	1.0	2.2

MACHINING ±	F 정밀	M 보통
0.5~3	0.05	0.1
~6	0.05	0.1
~30	0.1	0.2
~120	0.15	0.3
~400	0.2	0.5
~1M	0.3	0.8
~2M	0.5	1.2
~4M	-	2

WELDING ±	LENGTH A 정밀	LENGTH B 보통	GEOMETRIC F 정밀	GEOMETRIC F 보통
2~30	1	1	-	-
~120	1	2	0.5	1
~400	1	2	1	1.5
~1M	2	3	1.5	3
~2M	3	4	2	4.5
~4M	4	6	3	6
~8M	5	8	4	8

STANDARD FOR SURFACE ROUGHNESS	
MARKS	Rz
~	
▽	Rz 100
▽▽	Rz 25
▽▽▽	Rz 6.3
▽▽▽▽	Rz 0.8

호칭	피치	드릴경	HIBI-COIL 드릴경
M2	0.40	1.60	2.1
M3	0.50	2.50	3.15
M4	0.70	3.30	4.2
M5	0.80	4.20	5.2
M6	1.00	5.00	6.25
M8	1.25	6.60	8.3
M10	1.50	8.50	10.5
M12	1.75	10.20	12.5
M14	2.00	12.00	14.5
M16	2.00	14.00	16.5
M18	2.50	15.50	18.75
M20	2.50	17.50	20.75

THIS DRAWING CONTAINS CONFIDENTIAL PROPRIETARY INFORMATION. HENC, THE REPRODUCTION, TRANSFER AND/OR UTILIZATION IN WHOLE OR IN PART ARE PROHIBITED WITHOUT THE WRITTEN PERMISSION OF HD HYUNDAI ROBOTICS CO., LTD.

A3 (420x297mm)

Cable for ARM (HDR12H-14)

(Revision No. : V01)

REVISION NO	CONTENTS	DATE
R0	INITIAL DRAWING	2024.01.03
R1	도면 수정	2024.05.21
V01	네이밍 변경	2025.03.31

NO.	DESCRIPTION	MATERIAL (MAKER)	Q'TY	WEIGHT	REMARK

DWN	DSND	CHKD	CHKD	APPD	REASON FOR MODIFICATION	Q'TY	NO.
							04
					네이밍 변경	-	03
박지민 2025.03.18	박지민 2025.03.18		김경수 2025.03.18	최재한 2025.03.18	용접파워터미널 교체	-	02
양용근 2024.06.03	양용근 2024.06.03			양용근 2024.06.03	First Issue		0

SCALE 1/1	PROJECT	1 SET	CC A
UNIT NO. 6202	TITLE CABLE UA/UH SERIES CABLE FOR ARM	DWG NO. P9999000060-03	Sheet 9/9
INFO NO. 62-02-A000			
PAINTING INNER COLOR OIL PROOF / OUTER COLOR OIL PROOF	W/O NO.		

CC : Confidential Code

HD HYUNDAI ROBOTICS

420x297mm)

■ HDR12H-14 Diagram for the Wiring

NO	DESCRIPTION	MATERIAL (MAKER)	Q'TY	WEIGHT	REMARK

GENERAL TOLERANCE UNLESS NOTED Satisfied with Length & Thickness (길이와 두께 공차 동시 만족 조건)					
SAND CASTING ± (사출주조)		FCD45		AC4C	
		C1 정밀	C2 보통	C1 정밀	C2 보통
LENGTH	≤10	1.5	2	0.3	0.9
	~25	1.5	2	0.4	1.0
	~50	1.5	2	0.5	1.1
	~120	1.5	2	0.7	1.2
	~250	2	2.5	0.9	1.4
	~400	2.5	3.5	1.1	1.8
	~800	4	5	1.6	2.5
	~1600	5	7	-	4
	~2500	-	10	-	7
THICKNESS	≤6	1.2	2	0.6	1.2
	~10	1.2	2	0.7	1.4
	~18	1.5	2.5	0.8	1.6
	~30	2	3	0.9	1.8
	~50	2.5	4	1.0	2.2

MACHINING ±	F 정밀	M 보통
0.5~3	0.05	0.1
~6	0.05	0.1
~30	0.1	0.2
~120	0.15	0.3
~400	0.2	0.5
~1M	0.3	0.8
~2M	0.5	1.2
~4M	-	2

WELDING ±	LENGTH		GEOMETRIC	
	A 정밀	B 보통	F 정밀	F 보통
2~30	1	1	-	-
~120	1	2	0.5	1
~400	1	2	1	1.5
~1M	2	3	1.5	3
~2M	3	4	2	4.5
~4M	4	6	3	6
~8M	5	8	4	8

STANDARD FOR SURFACE ROUGHNESS	
MARKS	Rz
~	▽
▽	▽ Rz 100
▽▽	▽ Rz 25
▽▽▽	▽ Rz 6.3
▽▽▽▽	▽ Rz 0.8

호칭	피치	드릴경	HIBI-COIL 드릴경
M2	0.40	1.60	2.1
M3	0.50	2.50	3.15
M4	0.70	3.30	4.2
M5	0.80	4.20	5.2
M6	1.00	5.00	6.25
M8	1.25	6.60	8.3
M10	1.50	8.50	10.5
M12	1.75	10.20	12.5
M14	2.00	12.00	14.5
M16	2.00	14.00	16.5
M18	2.50	15.50	18.75
M20	2.50	17.50	20.75

변 경 이 력 표
ALTERATION LIST

No.	작성일 Date	담 당 Design	변 경 내 용		Revision No.	비 고 REMARK
			변 경 전	변 경 후		
1	2024. 01. 03	김덕하		INITIAL DRAWING.	R0	
2	2024. 05. 21	박지민		도면 수정	R1	
3	2025. 03. 31	김익진	UA012E	HDR12H-14	V01	
4						
5						
6						
7						
8						
9						
10						
11						
12						
13						
14						
15						
16						
17						
18						
19						
20						

DWN	DSND	CHKD	CHKD	APPD	REASON FOR MODIFICATION	Q'TY	NO.
							04
					네이밍 변경	-	03
박지민 2025.03.18	박지민 2025.03.18		김정수 2025.03.18	최재환 2025.03.18	용산파워터미널 교체	-	02
양용근 2024.06.03	양용근 2024.06.03			양용근 2024.06.03	First Issue		0

SCALE 1/1	PROJECT	1 SET	CC A
UNIT NO. 6202	TITLE CABLE UA/UH SERIES CABLE FOR ARM	DWG NO. P9999000060-03	Sheet 9/9
INFO NO. 62-02-A000			
PAINTING INNER COLOR OK 7800T / OUTER COLOR OK 7800T	W/O NO.		

CC : Confidential Code

HD HYUNDAI ROBOTICS

THIS DRAWING CONTAINS CONFIDENTIAL PROPRIETARY INFORMATION. HENC, THE REPRODUCTION, TRANSFER AND/OR UTILIZATION IN WHOLE OR IN PART ARE PROHIBITED WITHOUT THE WRITTEN PERMISSION OF HD HYUNDAI ROBOTICS CO., LTD.

A3 (420x297mm)

GENERAL TOLERANCE UNLESS NOTED Satisfied with Length & Thickness (길이와 두께 공차 동시 만족 조건)					
SAND CASTING + (사형주조)		FCD45		AC4C	
		C1 정밀	C2 보통	C1 정밀	C2 보통
LENGTH	≤10	1.5	2	0.3	0.9
	~25	1.5	2	0.4	1.0
	~50	1.5	2	0.5	1.1
	~125	1.5	2	0.7	1.2
	~250	2	2.5	0.9	1.4
	~400	2.5	3.5	1.1	1.8
	~800	4	5	1.6	2.5
	~1600	5	7	-	4
	~3150	-	10	-	7
THICKNESS	≤6	1.2	2	0.6	1.2
	~10	1.2	2	0.7	1.4
	~18	1.5	2.5	0.8	1.6
	~30	2	3	0.9	1.8
	~50	2.5	4	1.0	2.2

MACHINING ±	F 정밀	M 보통
0.5~3	0.05	0.1
~6	0.05	0.1
~30	0.1	0.2
~120	0.15	0.3
~400	0.2	0.5
~1M	0.3	0.8
~2M	0.5	1.2
~4M	-	2

WELDING ±	LENGTH A 정밀	LENGTH B 보통	GEOMETRIC E 정밀	GEOMETRIC F 보통
2~30	1	1	-	-
~120	1	2	0.5	1
~400	1	2	1	1.5
~1M	2	3	1.5	3
~2M	3	4	2	4.5
~4M	4	6	3	6
~8M	5	8	4	8

STANDARD FOR SURFACE ROUGHNESS	
MARKS	Rz
~	▽
▽	▽ Rz 100
▽▽	▽ Rz 25
▽▽▽	▽ Rz 6.3
▽▽▽▽	▽ Rz 0.8

호칭	피치	드릴경	HIGH-COL 드릴탭
M2	0.40	1.60	2.1
M3	0.50	2.50	3.15
M4	0.70	3.30	4.2
M5	0.80	4.20	5.2
M6	1.00	5.00	6.25
M8	1.25	6.80	8.3
M10	1.50	8.50	10.5
M12	1.75	10.20	12.5
M14	2.00	12.00	14.5
M16	2.00	14.00	16.5
M18	2.50	15.50	18.75
M20	2.50	17.50	20.75

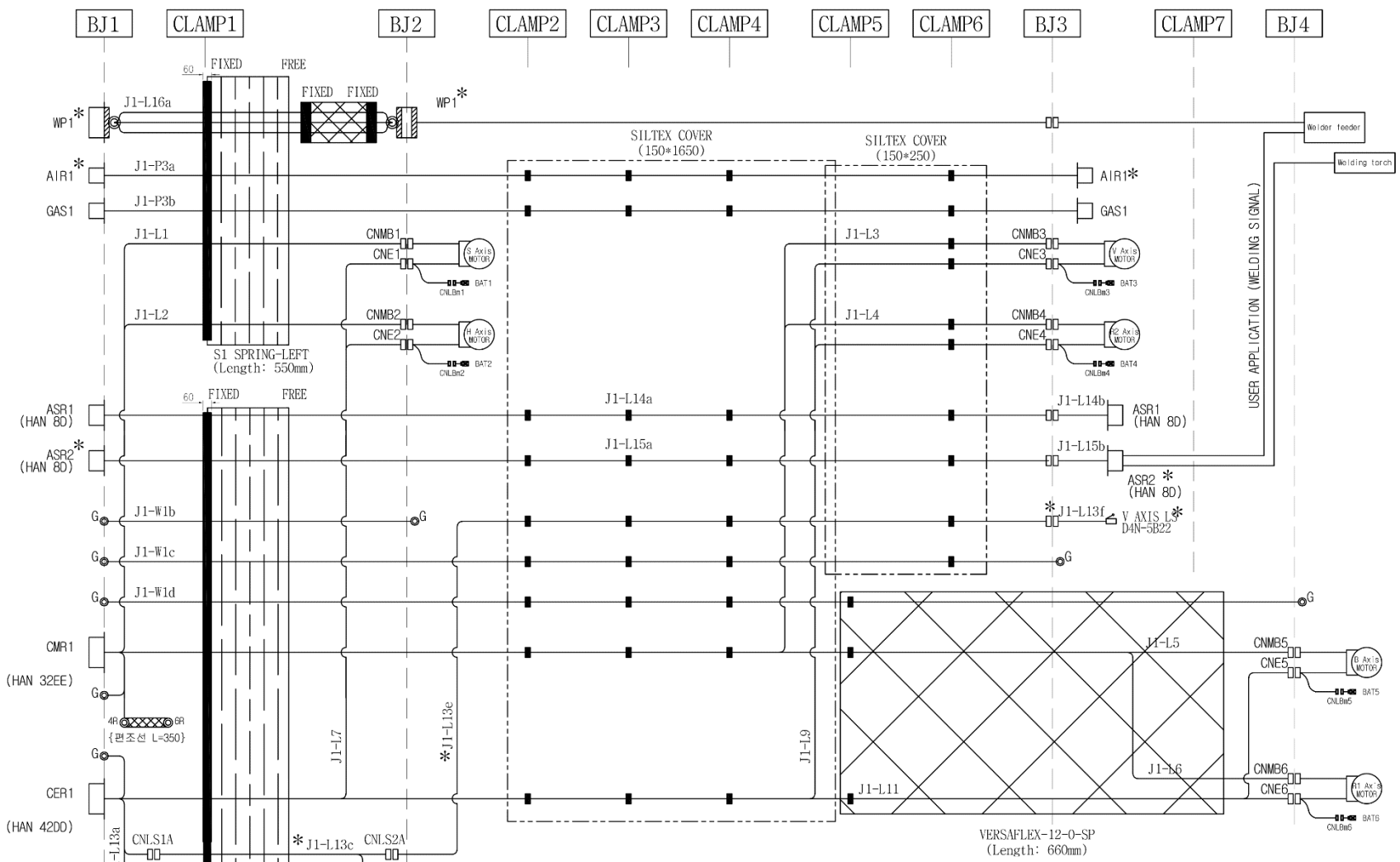

NO.	DESCRIPTION	MATERIAL (MAKER)	Q'TY	WEIGHT	REMARK

NOTE)

1. ▽ 안전/법규 적합성에 주의
   1.▽ Indication safety/compliance special characteristcs
2. 필요 부품 사급 후 CLAMPING하여 납품할 것.
3. ■ : CLAMP 부위 (고무로 감음)
4. 치수는 공작, CLAMPING 후의 참조치수임.
5. * : OPTION 사양
6. 부가축 번호는 제어기 기준으로 부착할 것.
   제어기 부가축 구성사양은 제작사양서 참조 또는 공사 담당자 문의할 것.

BJ2 - Clamp4 — 케이블분기 — Clamp6 - BJ3 / Clamp5 - Clamp7 - BJ4

DWN	DSND	CHKD	CHKD	APPD	REASON FOR MODIFICATION	Q'TY	NO.
							04
					네이밍 변경	-	03
박지만 2025.03.18	박지만 2025.03.18		김경수 2025.03.18	최재환 2025.03.18	용접파워케이블 교체	-	02
양용근 2024.06.03	양용근 2024.06.03			양용근 2024.06.03	First Issue		01

SCALE 1/1	PROJECT	1 SET	CC A
UNIT NO. 6202	TITLE CABLE UA/UH SERIES CABLE FOR ARM	DWG NO. P9999000060-03	Sheet 9/9
INFO NO. 62-02-A000			
PAINTING INNER COLOR RAL7035 / OUTER COLOR RAL7035	W/O NO.		

CC : Confidential Code

HD HYUNDAI ROBOTICS

THIS DRAWING CONTAINS CONFIDENTIAL PROPRIETARY INFORMATION. HENC, THE REPRODUCTION, TRANSFER AND/OR UTILIZATION IN WHOLE OR IN PART ARE PROHIBITED WITHOUT THE WRITTEN PERMISSION OF HD HYUNDAI ROBOTICS CO., LTD.

A3 (420x297mm)

GENERAL TOLERANCE UNLESS NOTED Satisfied with Length & Thickness (길이와 두께 공차 동시 만족 조건)				
SAND CASTING ± (사형주조)		FCD45		AC4C
		C1 정밀	C2 보통	C1 정밀	C2 보통
LENGTH	≤10	1.5	2	0.3	0.9
	~25	1.5	2	0.4	1.0
	~50	1.5	2	0.5	1.1
	~120	1.5	2	0.7	1.2
	~250	2	2.5	0.9	1.4
	~400	2.5	3.5	1.1	1.8
	~800	4	5	1.6	2.5
	~1600	5	7	-	4
	~1600	-	10	-	7
THICKNESS	≤6	1.2	2	0.6	1.2
	~10	1.2	2	0.7	1.4
	~18	1.5	2.5	0.8	1.6
	~30	2	3	0.9	1.8
	~50	2.5	4	1.0	2.2

MACHINING ±	F 정밀	M 보통
0.5~3	0.05	0.1
~6	0.05	0.1
~30	0.1	0.2
~120	0.15	0.3
~400	0.2	0.5
~1M	0.3	0.8
~2M	0.5	1.2
~4M	-	2

WELDING ±	LENGTH A 정밀	LENGTH B 보통	GEOMTRIC F 정밀	GEOMTRIC F 보통
2~30	1	1	-	-
~120	1	2	0.5	1
~400	1	2	1	1.5
~1M	2	3	1.5	3
~2M	3	4	2	4.5
~4M	4	6	3	6
~8M	5	8	4	8

STANDARD FOR SURFACE ROUGHNESS	
MARKS	Rz
~	
▽	Rz 100
▽▽	Rz 25
▽▽▽	Rz 6.3
▽▽▽▽	Rz 0.8

호칭	피치	드릴경	HIBI-COIL 드릴경
M2	0.40	1.60	2.1
M3	0.50	2.50	3.15
M4	0.70	3.30	4.2
M5	0.80	4.20	5.2
M6	1.00	5.00	6.25
M8	1.25	6.60	8.3
M10	1.50	8.50	^0.5
M12	1.75	^10.20	^2.5
M14	2.00	^12.00	^4.5
M16	2.00	^14.00	^6.5
M18	2.50	^15.50	18.75
M20	2.50	^17.50	20.75

THIS DRAWING CONTAINS CONFIDENTIAL PROPRIETARY INFORMATION. HENC, THE REPRODUCTION, TRANSFER AND/OR UTILIZATION IN WHOLE OR IN PART ARE PROHIBITED WITHOUT THE WRITTEN PERMISSION OF HD HYUNDAI ROBOTICS CO., LTD.

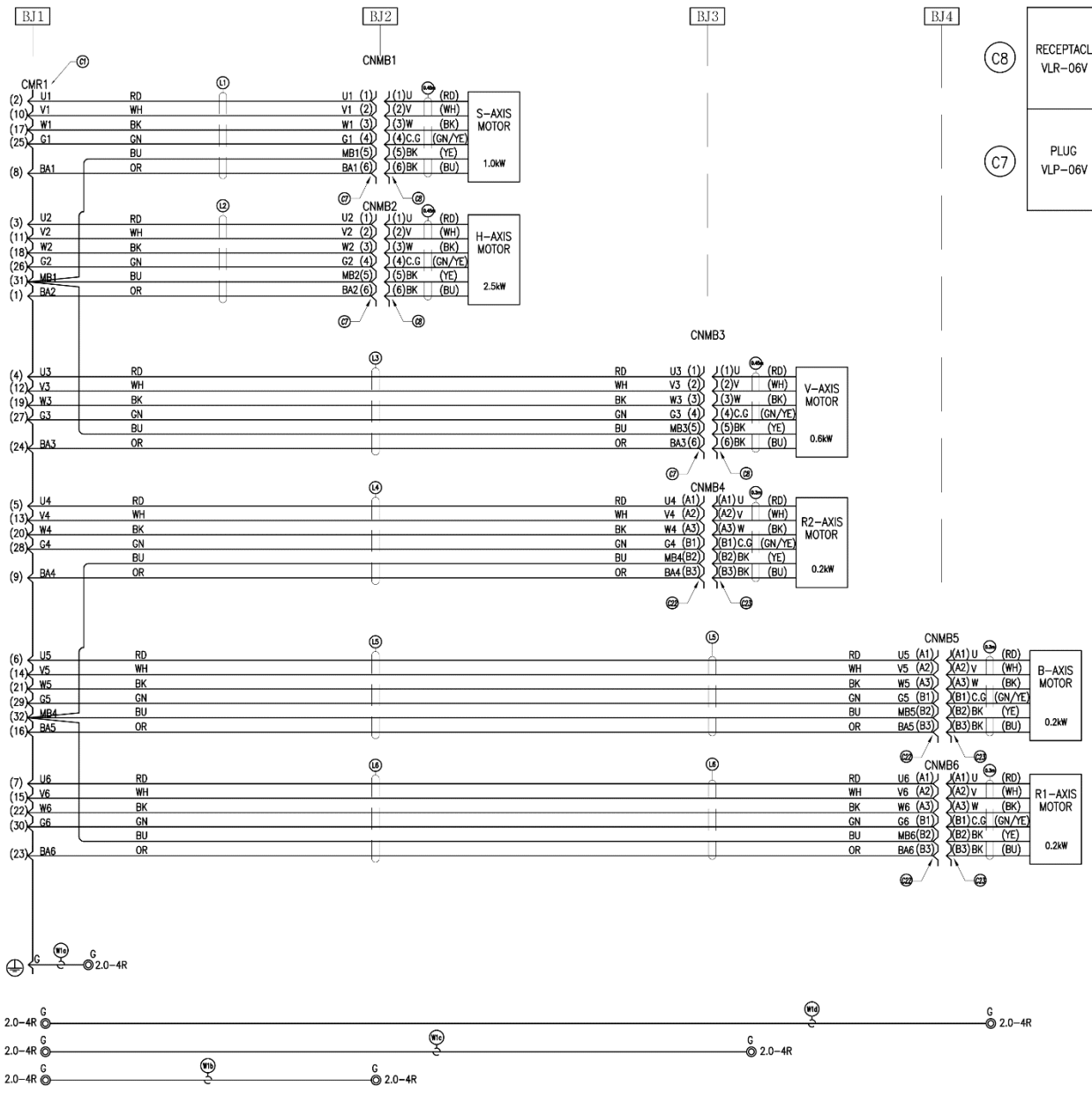

NO	DESCRIPTION	MATERIAL (MAKER)	Q'TY	WEIGHT	REMARK

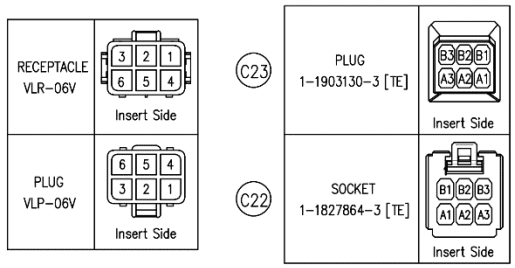

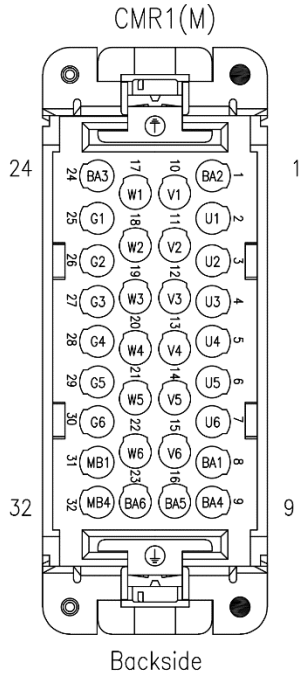

DWN	DSND	CHKD	CHKD	APPD	REASON FOR MODIFICATION	Q'TY	NO.
							04
					네이밍 변경	-	03
박지민 2025.03.18	박지민 2025.03.18		김경수 2025.03.18	최재한 2025.03.18	용심파워터미널 교체	-	02
양용근 2024.06.03	양용근 2024.06.03			양용근 2024.06.03	First Issue		0

SCALE 1/1	PROJECT	1 SET	CC A
UNIT NO. 6202	TITLE CABLE UA/UH SERIES CABLE FOR ARM	DWG NO. P9999000060-03	Sheet 9/9
INFO NO. 62-02-A000			
PAINTING INNER COLOR OK 2R00F / OUTER COLOR OK 2R00F	W/O NO.	HD HYUNDAI ROBOTICS	

CC : Confidential Code

A3 (420x297mm)

GENERAL TOLERANCE UNLESS NOTED Satisfied with Length & Thickness (길이와 두께 공차 동시 만족 조건)					
SAND CASTING + (사형주조)		FCD45		AC4C	
		C1 정밀	C2 보통	C1 정밀	C2 보통
LENGTH	≤10	1.5	2	0.3	0.9
	~25	1.5	2	0.4	1.0
	~50	1.5	2	0.5	1.1
	~123	1.5	2	0.7	1.2
	~253	2	2.5	0.9	1.4
	~403	2.5	3.5	1.1	1.8
	~803	4	5	1.6	2.5
	~1603	5	7	-	4
	~3203	-	10	-	7
THICKNESS	≤6	1.2	2	0.6	1.2
	~10	1.2	2	0.7	1.4
	~18	1.5	2.5	0.8	1.6
	~30	2	3	0.9	1.8
	~50	2.5	4	1.0	2.2

MACHINING ±	F 정밀	M 보통
0.5~3	0.05	0.1
~6	0.05	0.1
~30	0.1	0.2
~120	0.15	0.3
~400	0.2	0.5
~1M	0.3	0.8
~2M	0.5	1.2
~4M	-	2

WELDING ±	LENGTH		GEOMETRIC	
	A 정밀	B 보통	E 정밀	F 보통
2~30	1	1	1	-
~120	1	2	0.5	1
~400	1	2	1	1.5
~1M	2	3	1.5	3
~2M	3	4	2	4.5
~4M	4	6	3	6
~8M	5	8	4	8

STANDARD FOR SURFACE ROUGHNESS	
MARKS	Rz
~	▽
▽	▽ Rz 100
▽▽	▽ Rz 25
▽▽▽	▽ Rz 6.3
▽▽▽▽	▽ Rz 0.8

호칭	피치	드릴경	HIGH-COL 드릴경
M2	0.40	1.60	2.1
M3	0.50	2.50	3.15
M4	0.70	3.30	4.2
M5	0.80	4.20	5.2
M6	1.00	5.00	6.25
M8	1.25	6.80	8.3
M10	1.50	8.50	10.5
M12	1.75	10.20	12.5
M14	2.00	12.00	14.5
M16	2.00	14.00	16.5
M18	2.50	15.50	18.75
M20	2.50	17.50	20.75

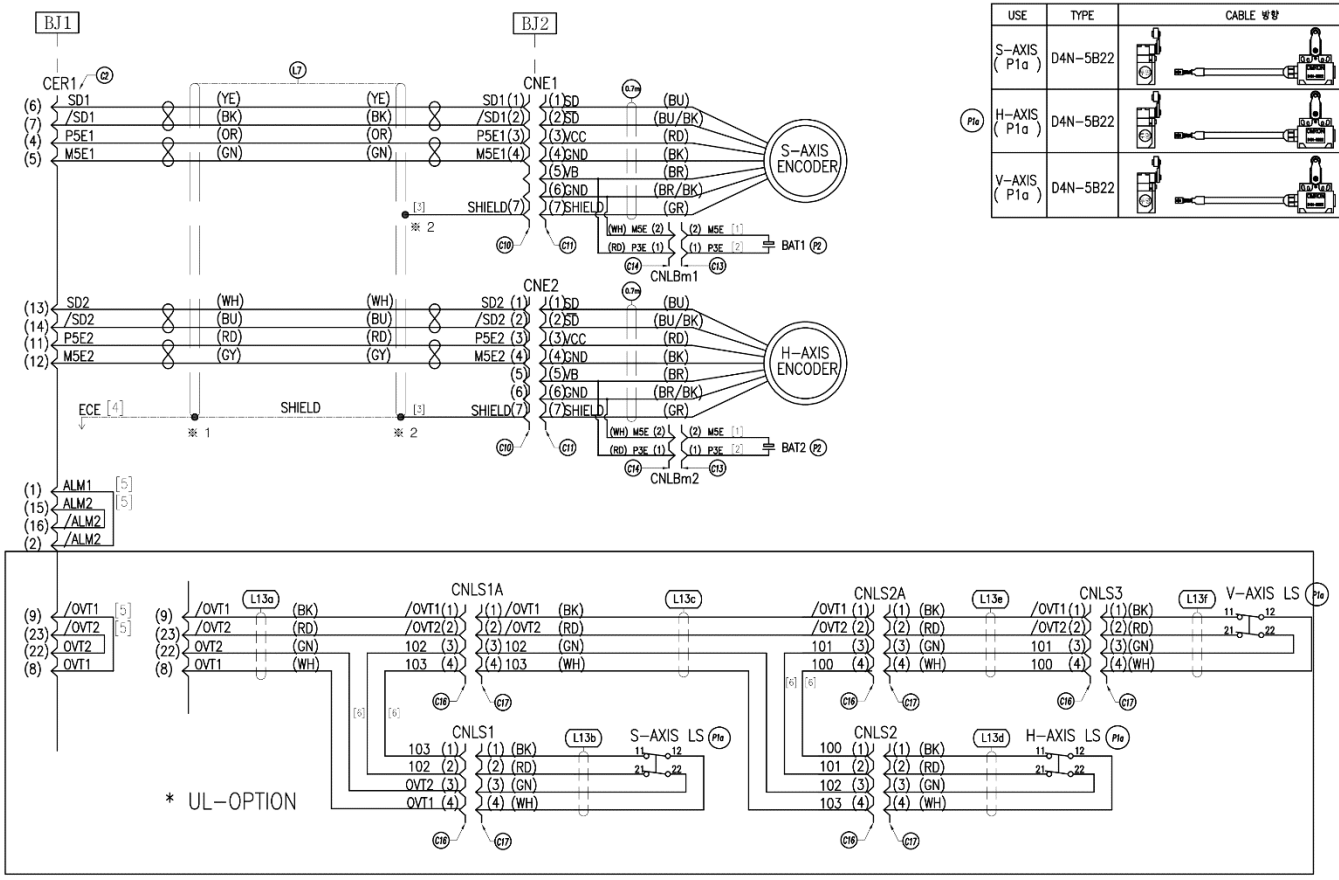

* LIMIT SWITCH TYPE

USE	TYPE	CABLE 방향
S-AXIS (P1a)	D4N-5B22	
H-AXIS (P1a)	D4N-5B22	
V-AXIS (P1a)	D4N-5B22	

C17	RECEPTACLE SMR-04V-B	Insert Side
C16	PLUG SMP-04V-BC	Insert Side
C14	RECEPTACLE SMR-02V-B	Insert Side
C13	PLUG SMP-02V-BC	Insert Side
C11	RECEPTACLE SMR-07V-B	Insert Side
C10	PLUG SMP-07V-BC	Insert Side

CER1(M)

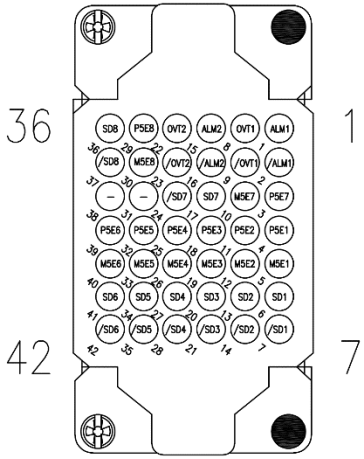

Backside

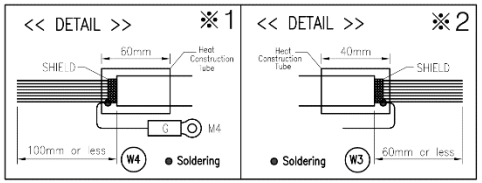

[1] UL1007 24AWG(BK) : 0.15m
[2] UL1007 24AWG(WH) : 0.15m
[3] UL1007 24AWG(WH) : 0.06m
[4] UL1430 COIRV 0.75sq(WH) : 0.1m
[5] UL1007 24AWG(BU) : 0.2m
* [6] UL1007 24AWG(BU) : 0.2m

NO.	DESCRIPTION	MATERIAL (MAKER)	Q'TY	WEIGHT	REMARK

DWN	DSND	CHKD	CHKD	APPD	REASON FOR MODIFICATION	Q'TY	NO.
							24
					네이밍 변경	-	23
박지연	박지연		김경수	최재환	용접파워터미널 교체	-	22
2025.03.18	2025.03.18		2025.03.18	2025.03.18			
양용근	양용근			양용근	First Issue		0
2024.06.03	2024.06.03			2024.06.03			

SCALE 1/1	PROJECT	1 SET	CC A
UNIT NO. 6202	TITLE CABLE UA/UH SERIES CABLE FOR ARM	DWG NO. P9999000060-03	Sheet 9/9
INFO NO. 62-02-A000			
PAINTING INNER COLOR / OUTER COLOR	W/O NO.		

CC : Confidential Code

HD HYUNDAI ROBOTICS

THIS DRAWING CONTAINS CONFIDENTIAL PROPRIETARY INFORMATION. HENC, THE REPRODUCTION, TRANSFER AND/OR UTILIZATION IN WHOLE OR IN PART ARE PROHIBITED WITHOUT THE WRITTEN PERMISSION OF HD HYUNDAI ROBOTICS CO., LTD.

A3 (420x297mm)

GENERAL TOLERANCE UNLESS NOTED Satisfied with Length & Thickness (길이와 두께 공차 동시 만족 조건)				
SAND CASTING ± (사형주조)		FCD45		AC4C
		C1 정밀	C2 보통	C1 정밀	C2 보통
LENGTH	≤10	1.5	2	0.3	0.9
	~25	1.5	2	0.4	1.0
	~50	1.5	2	0.5	1.1
	~123	1.5	2	0.7	1.2
	~253	2	2.5	0.9	1.4
	~403	2.5	3.5	1.1	1.8
	~803	4	5	1.6	2.5
	~1000	5	7	-	4
	~1250	-	10	-	7
THICKNESS	≤6	1.2	2	0.6	1.2
	~10	1.2	2	0.7	1.4
	~18	1.5	2.5	0.8	1.6
	~30	2	3	0.9	1.8
	~50	2.5	4	1.0	2.2

MACHINING ±	F 정밀	M 보통
0.5~3	0.05	0.1
~6	0.05	0.1
~30	0.1	0.2
~120	0.15	0.3
~400	0.2	0.5
~1M	0.3	0.8
~2M	0.5	1.2
~4M	-	2

WELDING ±	LENGTH A 정밀	LENGTH B 보통	GEOMETRIC F 정밀	GEOMETRIC F 보통
2~30	1	1	-	-
~120	1	2	0.5	1
~400	1	2	1	1.5
~1M	2	3	1.5	3
~2M	3	4	2	4.5
~4M	4	6	3	6
~8M	5	8	4	8

STANDARD FOR SURFACE ROUGHNESS	
MARKS	Rz
~	
▽	Rz 100
▽▽	Rz 25
▽▽▽	Rz 6.3
▽▽▽▽	Rz 0.8

호칭	피치	드릴경	HIBI-COIL 드릴경
M2	0.40	1.60	2.1
M3	0.50	2.50	3.15
M4	0.70	3.30	4.2
M5	0.80	4.20	5.2
M6	1.00	5.00	6.25
M8	1.25	6.60	8.3
M10	1.50	8.50	~0.5
M12	1.75	~10.20	~2.5
M14	2.00	~12.00	~4.5
M16	2.00	~14.00	~6.5
M18	2.50	~15.50	18.75
M20	2.50	~17.50	20.75

THIS DRAWING CONTAINS CONFIDENTIAL PROPRIETARY INFORMATION. HENC, THE REPRODUCTION, TRANSFER AND/OR UTILIZATION IN WHOLE OR IN PART ARE PROHIBITED WITHOUT THE WRITTEN PERMISSION OF HD HYUNDAI ROBOTICS CO., LTD.

A3 (420x297mm)

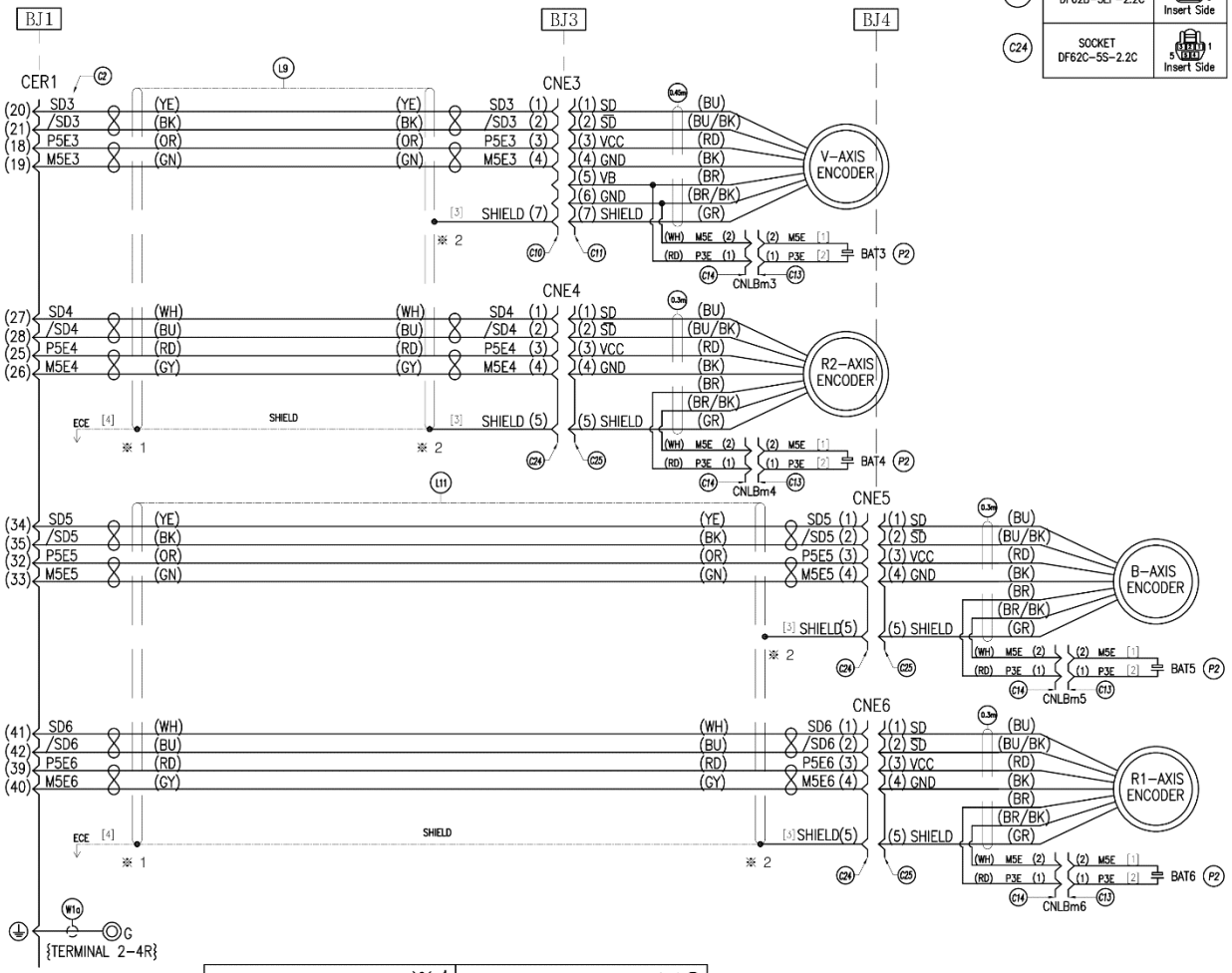

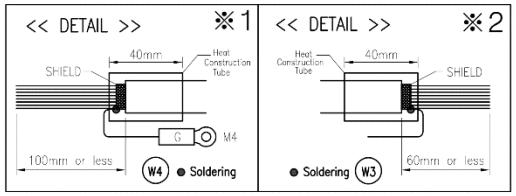

[1] UL1007 24AWG(BK) : 0.15m
[2] UL1007 24AWG(WH) : 0.15m
[3] UL1007 24AWG(WH) : 0.06m
[4] UL1430 COIRV 0.75sq(WH) : 0.1m
[5] UL1007 24AWG(BU) : 0.2m
* [6] UL1007 24AWG(BU) : 0.2m

C25	PLUG DF62B-5EP-2.2C	Insert Side
C24	SOCKET DF62C-5S-2.2C	Insert Side

C14	RECEPTACLE SMR-02V-B	Insert Side
C13	PLUG SMP-02V-BC	Insert Side
C11	RECEPTACLE SMR-07V-B	Insert Side
C10	PLUG SMP-07V-BC	Insert Side

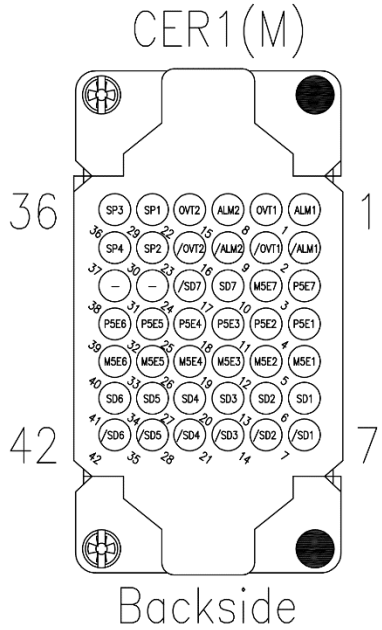

NO.	DESCRIPTION	MATERIAL (MAKER)	Q'TY	WEIGHT	REMARK

DWN	DSND	CHKD	CHKD	APPD	REASON FOR MODIFICATION	Q'TY	NO.
							04
					네이밍 변경	-	03
박지민 2025.03.18	박지민 2025.03.18		김경수 2025.03.18	최재한 2025.03.18	용접파워터미널 교체	-	02
양용근 2024.06.03	양용근 2024.06.03			양용근 2024.06.03	First Issue		0

SCALE 1/1	PROJECT	1 SET	CC A
UNIT NO. 6202	TITLE CABLE UA/UH SERIES CABLE FOR ARM	DWG NO. P9999000060-03	Sheet 9/9
INFO NO. 62-02-A000			
PAINTING INNER COLOR / OUTER COLOR	W/O NO.	HD HYUNDAI ROBOTICS	

CC : Confidential Code

GENERAL TOLERANCE UNLESS NOTED Satisfied with Length & Thickness (길이와 두께 공차 동시 만족 조건)					
SAND CASTING ± (사형주조)		FCD45		AC4C	
		C1 정밀	C2 보통	C1 정밀	C2 보통
LENGTH	≤10	1.5	2	0.3	0.9
	~25	1.5	2	0.4	1.0
	~50	1.5	2	0.5	1.1
	~123	1.5	2	0.7	1.2
	~253	2	2.5	0.9	1.4
	~403	2.5	3.5	1.1	1.8
	~803	4	5	1.6	2.5
	~1603	5	7	-	4
	~3150	-	10	-	7
THICKNESS	≤6	1.2	2	0.6	1.2
	~10	1.2	2	0.7	1.4
	~18	1.5	2.5	0.8	1.6
	~30	2	3	0.9	1.8
	~50	2.5	4	1.0	2.2

MACHINING ±	F 정밀	M 보통
0.5~3	0.05	0.1
~6	0.05	0.1
~30	0.1	0.2
~120	0.15	0.3
~400	0.2	0.5
~1M	0.3	0.8
~2M	0.5	1.2
~4M	-	2

WELDING ±	LENGTH		GEOMETRIC	
	A 정밀	B 보통	F 정밀	F 보통
2~30	1	1	-	-
~120	1	2	0.5	1
~400	1	2	1	1.5
~1M	2	3	1.5	3
~2M	3	4	2	4.5
~4M	4	6	3	6
~8M	5	8	4	8

STANDARD FOR SURFACE ROUGHNESS	
MARKS	Rz
~	▽
▽	▽ Rz 100
▽▽	▽ Rz 25
▽▽▽	▽ Rz 6.3
▽▽▽▽	▽ Rz 0.8

호칭	피치	드릴경	HIGH-COL 드릴비
M2	0.40	1.60	2.1
M3	0.50	2.50	3.15
M4	0.70	3.30	4.2
M5	0.80	4.20	5.2
M6	1.00	5.00	6.25
M8	1.25	6.80	8.3
M10	1.50	8.50	~0.5
M12	1.75	~10.20	~2.5
M14	2.00	~12.00	~4.5
M16	2.00	~14.00	~6.5
M18	2.50	~15.50	18.75
M20	2.50	~17.50	20.75

THIS DRAWING CONTAINS CONFIDENTIAL PROPRIETARY INFORMATION. HENC, THE REPRODUCTION, TRANSFER AND/OR UTILIZATION IN WHOLE OR IN PART ARE PROHIBITED WITHOUT THE WRITTEN PERMISSION OF HD HYUNDAI ROBOTICS CO., LTD.

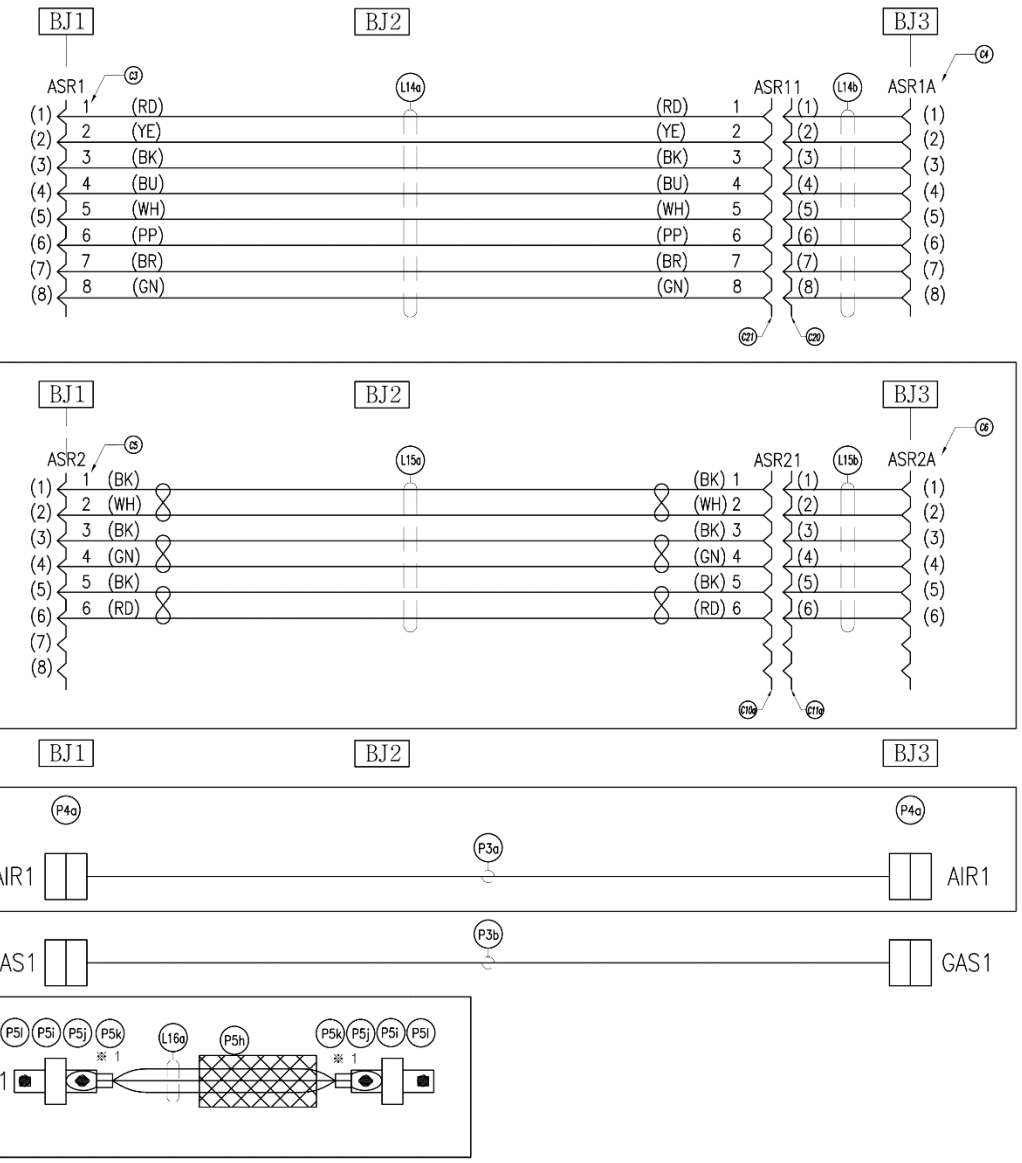

NO.	DESCRIPTION	MATERIAL (MAKER)	Q'TY	WEIGHT	REMARK
C20	RECEPTACLE VLR-08V	Insert Side			
C21	PLUG VLP-08V	Insert Side			
C11a	RECEPTACLE SMR-07V-B	Insert Side			
C10a	PLUG SMP-07V-BC	Insert Side			

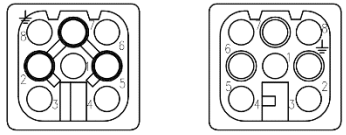

C3 C5 Insert Side

C4 C6 Insert Side

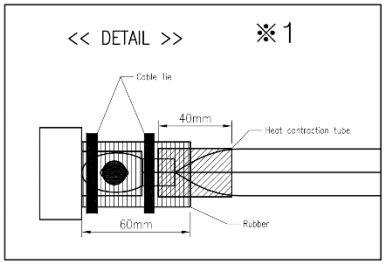

DWN	DSND	CHKD	CHKD	APPD	REASON FOR MODIFICATION	Q'TY	NO.
							04
					네이밍 변경	-	03
박지민 2025.03.18	박지민 2025.03.18		김경수 2025.03.18	최재환 2025.03.18	용접파워케이블 교체	-	02
양용근 2024.06.03	양용근 2024.06.03			양용근 2024.06.03	First Issue		0

SCALE 1/1	PROJECT	1 SET	CC A
UNIT NO. 6202	TITLE CABLE UA/UH SERIES CABLE FOR ARM	DWG NO. P9999000060-03	Sheet 9/9
INFO NO. 62-02-A000			
PAINTING INNER COLOR / OUTER COLOR	W/O NO.		

CC : Confidential Code

HD HYUNDAI ROBOTICS

A3 (420x297mm)

GRC: 477, Bundangsuseo-ro, Bundang-gu, Seongnam-si, Gyeonggi-do, Republic of Korea
Daegu: 50, Techno sunhwan-ro 3-gil, Yuga-eup, Dalseong-gun, Daegu, Republic of Korea
Ulsan: Room 2015, Automobile and Ships Technology Hall, 21, Maegoksaneop-ro, Buk-gu, Ulsan, Republic of Korea
Jungbu: 161, Songgok-gil, Yeomchi-eup, Asan-si, Chungcheongnam-do, Republic of Korea
Room 101, Bldg. B, 170-3, Pyeongdongsandan-ro, Gwangsan-gu, Gwangju, Republic of Korea
ARS 1588-9997
www.hyundai-robotics.com