Furhat Robotics

Furhat Robot Platform

The Furhat Platform is a powerful, unified set of products that combine to enable the development and delivery of breakthrough user experiences that advance the frontiers of human computer interaction via social robotics.

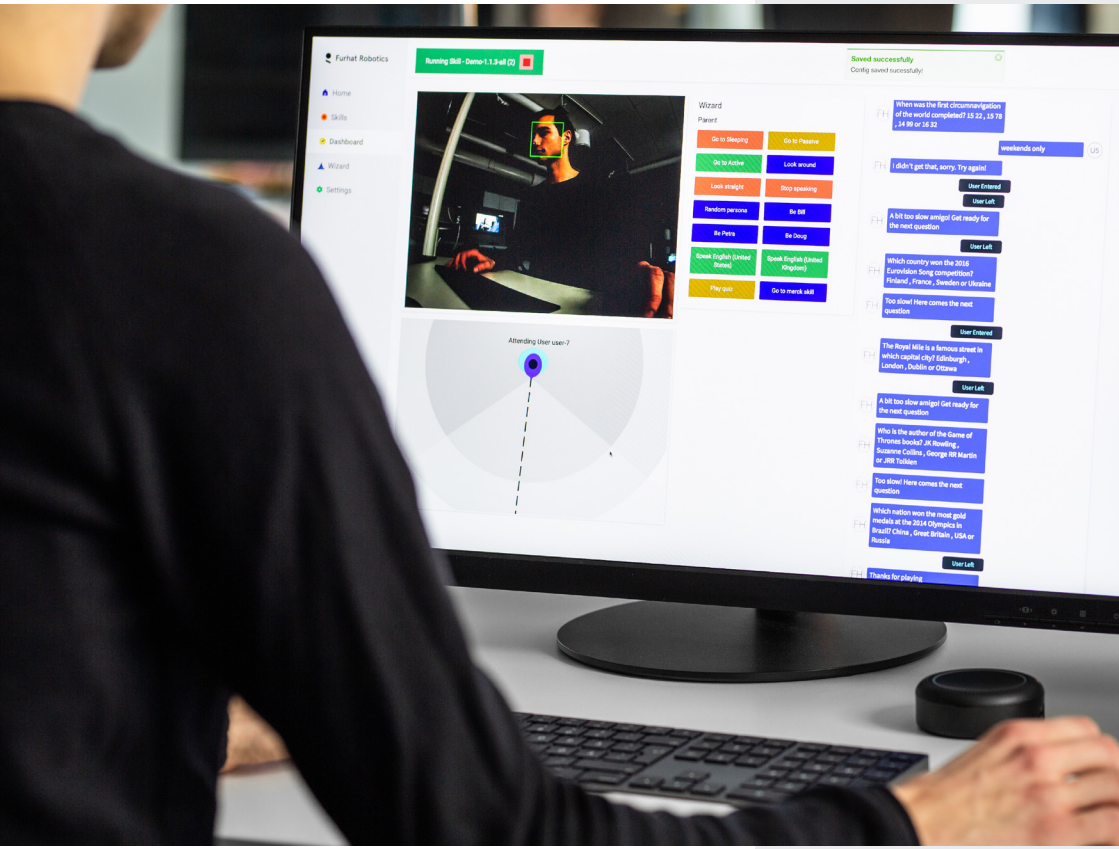

Furhat Robot

The Furhat Robot is an embodied conversational agent that combines the impact of a physically present robot with the powerful digital technology for emotional, conversational and social intelligence.

The highly expressive and customisable face is the result of the unique projection architecture with swappable face masks combined with an animation engine in Unity for creating any face or facial expression. The sensors, the RGB camera and microphone array, paired with computer vision and speech technology software allows the robot to look people in their eyes, return their smiles and engage in conversation with them.

Furhat SDK and Skill Framework

The Furhat SDK features a Skill Framework for skill creators to orchestrate the rich and complex interactions that the Furhat Robot enables. The Skill Framework uses the development paradigm of hierarchical state machines (HSM) and an event architecture for managing dialogue, users in the interaction space and robot behavior.

Skill creators develop skills using the Kotlin Skill API, harnessing the full power of the modern Kotlin programming language, or use the Blockly graphical programming interface to create simple interactions and prototypes. Optionally, skill creators can bypass the skill framework and directly control basic functions of the Furhat Robot from any programming language using the Remote API – a restful polyglot API.

The Furhat SDK includes a virtual Furhat with a complete environment to simulate interactions with the Furhat Robot on your computer. The Furhat SDK also includes a set of tools for creating gestures, logging and wizard-of-Oz as well as documentation and tutorials to get started creating skills for Furhat.

Furhat Library

The Furhat Platform has a library of faces of different gender, ages, skin colours, and human likeness, as well as a large selection of voices with different speaking styles to allow the creation of unique characters.

The Skill Library houses a set of skills to run on the robot out-of-the-box for simple demo purposes or to run complex multi-party, mixed-initiative collaborative interactions.

Source code for the library skills are available on Github, and provides ample coding examples of technical integrations as well as a variety of use-cases. In addition to complete skills, the Asset Collection gives developers access to useful code snippets, additional gestures, and other useful resources directly in their IDE.

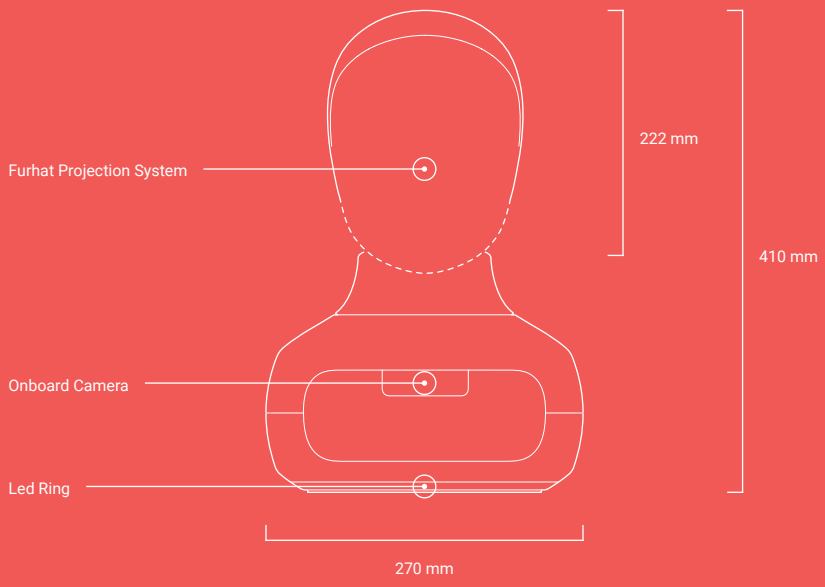
Furhat Projection System
Onboard Camera
Led Ring
222 mm
410 mm
270 mm

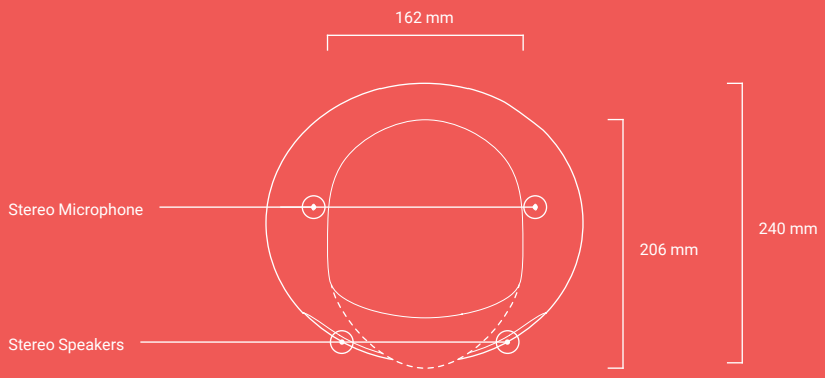
162 mm
Stereo Microphone
Stereo Speakers
206 mm
240 mm

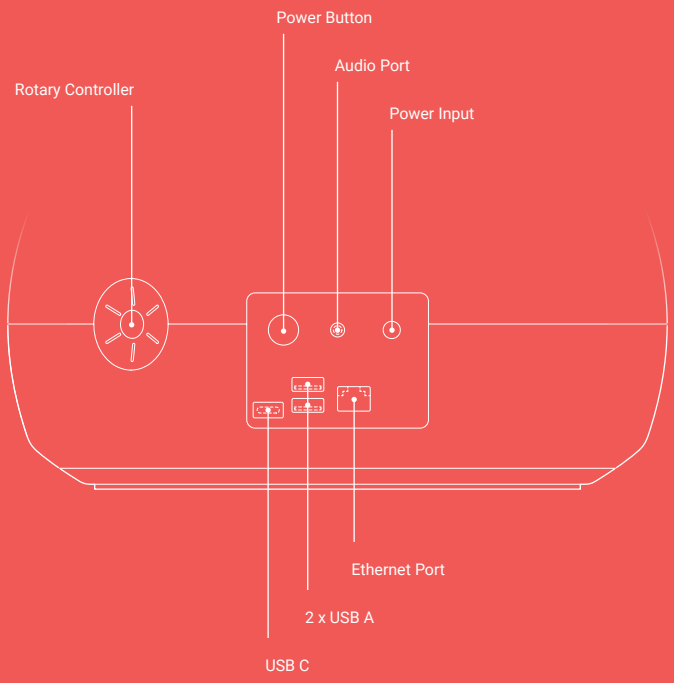

Bundled USB Microphone

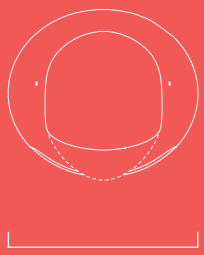

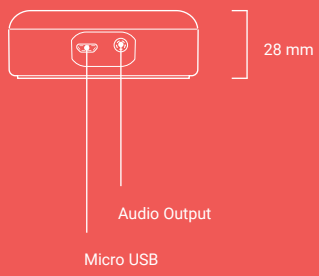

Specifications

Physical Dimensions

- 410mm x 270mm x 240mm (HxWxD)
- Eye Height: ~300[1] mm
- Robot Weight: 3.5 kg

Onboard Camera Sensor

- RGB Sensor Type
- 120° diagonal FOV
- 3.4 MP camera streaming 640x480 pixels
- Fixed Focus for interaction space
- Automatic Exposure control

Onboard Microphones

2 x 100Hz~10kHz digital, PDM stereoscopic digital MEMS omnidirectional microphones, set 180mm apart on the robots shoulders.

Bundled USB Microphone

- 4 x MEMS omnidirectional digital mics
- Far-field voice pick-up up to 5m
- 360° pick-up pattern
- DOA (Direction of Arrival)
- AEC (Automatic Echo Cancellation)
- AGC (Automatic Gain Control)
- NS (Noise Suppression)
- Sensitivity: -26 dBFS (Omnidirectional)
- Acoustic Overload Point: 120 dBSPL

Projection & Optics

- 165[2] lumens brightness
- 1280x720[3] Resolution
- 1400:1 Contrast
- Texas Instruments DLP®

Furhat Mask

The mask is based on a Furhat proprietary polymer blend that is optimized for optical performance in conjunction with Furhat Projection & Optics system.

Motion Platform

- 3 Degrees Of Freedom (DOF)
- Pan/Tilt/Roll with silent off-axis panning
- 3 x high speed servos, active feedback
- 0.088° resolution
- 25 kg·cm stall torque
- Metallic gears

LED Ring

Enables a *silver lining effect*, allowing the robot to signal a presence outside the container of its body, further increasing its presence in a space when needed. Uses 88 x RGB LED, controllable from FurhatOS/Skills

Rotary Controller

Rotary thumbwheel controller with click function controls volume & on face menu.

Computer Platform

- Intel Core i5 CPU, up to 3.40 GHz
- 8GB RAM
- 120 GB SSD mass storage
- Iris Plus 640 GPU

Speaker System

Dual speakers are optimised for human voice frequencies and angled to support the interaction space.

- 2.5”
- 30W Power
- Full range type
- Magnetic type
- Aluminium cone

Rear I/O Panel

- Power On/Off Switch
- 19[4] Volt/90 Watt power input jack
- 802.11ac Wifi, 2.4/5.0 Ghz
- Wired Ethernet Port - 10/100/1000
- 2 x USB A supporting USB 3.0
- 1 x USB-C[5]

Product Packaging

Shipped in protective foam box, hard shelled protective case as optional add-on

Environmental & Installation

Ambient Temperature: 5-25° C/41-77° F
200 mm ventilation clearance behind unit

Speech Synthesis

The *Furhat Platform* has support for a continuously growing (currently 40+) spoken languages including male, female and (in selected cases) child variants.

The *Furhat Platform* supports both onboard voices (from Acapela), as well as cloud based voices from Amazon Polly[6] and Microsoft Azure[7].

The *Furhat Platform* has specific pluggability support which enables us to easily extend to additional cloud based voices as needed.

Speech Recognition

The *Furhat Platform* has support for a continuously growing (currently 120+) spoken languages and variants.

The *Furhat Platform* includes out of the box support for both Google Cloud Speech-To-Text as well as Microsoft Azure Cognitive Services Speech-to-Text services.

External Monitor Support

The *Furhat Platform* provides support for an external monitor connected via the robots USB-C port. The officially supported monitors are:

- ELO 1502L - Full HD (1080p version)
- Dell P2418HT 24” Touch

[1] Mask Geometry Dependent

[2,3] Robot Hardware revisions of 2.4.0 and later / Robots from Furhat-365 and onwards

[4] 12V power supply on units up to unit 224, 19V power supply on units numbered 225 and later

[5] Thunderbolt 3 (40Gbps), USB 3.1 Gen 2 (10Gbps) & DP 1.2

[6] Including Neural and Newscaster style voices

[7] Including angry, cheerful, excited, friendly, hopeful, sad, shouting, terrified, unfriendly, whispering and more speaking styles

Furhat Robotics

Stockholm Sweden

hello@furhatrobotics.com

www.furhatrobotics.com

Get Furhat