PUMA ULTRA SMD Pick & Place System

Version 3.3 / August 2026

Specifications

		PUMA[1]		PUMA[2]		PUMA[4]	
		Stand Alone	In Line	Stand Alone	In Line	Stand Alone	In Line
Productivity	Optimum placement speed [1]	Chip 9'000 cph		Chip 17'400 cph		Chip 30'000 cph	
	Speed (IPC 9850) [1]	Chip 7'100 cph QFP 6'600 cph		Chip 13'300 cph QFP 6'600 cph		Chip 20'100 cph QFP 9'400 cph	
	Speed (IPC 9850A) [1]	Chip 6'900 cph QFP 5'200 cph		Chip 12'400 cph QFP 5'200 cph		Chip 18'100 cph QFP 6'600 cph	
	Jet speed solder paste up to Shockwave valve	Optimum [2] 1'460'000 dots/h Dot matrix [3] 665'000 dots/h Application average [4] 350'000 dots/h					
	Jet speed glue up to Piezo valve	Optimum [5] 2'000'000 dots/h Dot matrix Jet-on-the-Fly [6] 780'000 dots/h Dot matrix Stop 'n Jet [6] 177'000 dots/h					
	Dispensing speed up to [6]	Time/pressure valve 38'000 dots/h Archimedean screw valve 30'000 dots/h Volume dispenser valve 26'000 dots/h					
	Job changeover time	< 1 min (loading job, adjust conveyor/table, restart production)					
Feeder	Feeder system	EVO and hyQ (intelligent single feeder) CLM (intelligent cassette feeder)					
	Feeder capacity (8mm tape)	260	140	260	140	260 / 280[*] 140 / 160[*] *[*] with optional Extended Rack, pick position cannot be taught with top camera*	
Components	Component size range	008004 (imp.) – 109 x 87 mm Complete range, see constraints below Constraints: 0201 (imp.) – 40 x 40 mm incl. leads → Standard Up to 99 x 35 mm incl. leads → With optional MFOV[*] software license Up to 109 x 87 mm incl. leads → With opt. MFOV license and Vision Box[**] 01005 (imp.) → With opt. Nozzle 0 and EVO feeder type 008004 (imp.) / 0201 (m) [7] → With opt. Nozzle 0 and EVO feeder type *[*] Multi Field of View* *[**] Requires space up to 22 hyQ/EVO - 30 CLM Feeder lanes, front side mounting only (see System Description)*					
	Mass moment of inertia	200 g x cm²					
	Min. lead pitch	0.3 mm (12mil)					
	Min. ball diameter / pitch	0.2 mm					
	Min. component height	> 0.0 mm					
	Max. component height	Standard: 18 mm / On request other heights					
	Process height	± 18 mm (0.71") from zero height					
Accuracy	Linear encoder resolution XY	0.2 µm					
	Rotation axis resolution	0.007°					
	Overall placement accuracy XY chip	± 40 µm (3σ) [8]					
	Overall placement accuracy XY QFP	± 30 µm (3σ) [8]					
PCB	Min. PCB dimensions	20 x 20 mm (0.8 x 0.8")	50 x 50mm (2 x 2")	20 x 20 mm (0.8 x 0.8")	50 x 50mm (2 x 2")	20 x 20 mm (0.8 x 0.8")	50 x 50mm (2 x 2")
	Max. PCB dimensions	560 x 610 mm (22 x 24") standard 1830 x 610 mm (72 x 24") with longboard option					
	PCB thickness	0.5-3.5 mm (0.02 - 0.13")	0.5-5.0 mm (0.02 - 0.2")	0.5-3.5 mm (0.02 - 0.13")	0.5-5.0 mm (0.02 - 0.2")	0.5-3.5 mm (0.02 - 0.13")	0.5-5.0 mm (0.02 - 0.2")
	PCB edge clearance	3.0-5.0 mm (0.11 – 0.2") *(varies with PCB thickness)*	T: 3.0 mm (0.11") B: 5.0 mm (0.2")	3.0-5.0 mm (0.11 – 0.2") *(varies with PCB thickness)*	T: 3.0 mm (0.11") B: 5.0 mm (0.2")	3.0-5.0 mm (0.11 – 0.2") *(varies with PCB thickness)*	T: 3.0 mm (0.11") B: 5.0 mm (0.2")
	Max. board weight	-	4 kg (8.8 lb)	-	4 kg (8.8 lb)	-	4 kg (8.8 lb)
	Conveyor height	-	SMEMA 940 – 965 mm	-	SMEMA 940 – 965 mm	-	SMEMA 940 – 965 mm
	Clearance below PCB	40 mm (1.57")	27 mm (1.1")	40 mm (1.57")	27 mm (1.1")	40 mm (1.57")	27 mm (1.1")

Configuration

		PUMA[1]	PUMA[2]	PUMA[4]
Machine base	Pick & Place head with 1x spindle, optional up to 2x dispensing axis	●		
	Pick & Place head with 2x spindles, optional up to 2x dispensing axis		●	
	Pick & Place head with 4x spindles, optional 1x dispensing axis			●
	Dual bottom camera system			●
	Stand alone type (PCB table, magnetic PCB holder, support pins)	○	○	○
	In line type (conveyor 3 stage, support pins, manual width adjust.)	○	○	○
	Dispensing preparation kit (dot plate, purge and z-height calibration station)	○	○	○
	Interior lighting LED	●	●	●
	Signal tower (3 color)	●	●	●
PCB Handling	IPC-HERMES-9852, SMEMA interface	●	●	●
	Inline systems: Conveyor direction L/R, R/L, batch mode R/R, L/L	●	●	●
	Inline systems: Automatic conveyor width adjustment	○	○	○
	Inline systems: Conveyor extensions	○	○	○
	Inline systems: PCB inspection station on conveyor	○	○	○
Control and software	ePlace P&P/Disp. software (En, De, Fr, Ru, Pl, Zh, Es, Cs, Ja)	●	●	●
	Machine PC with Windows 11 OS and 21.5" touch screen	●	●	●
	Technical support software	●	●	●
Alignment systems	Cognex SMD4 PatMax vision license (fiducials, chip, QFP, asymm. BGA and leads)	●	●	●
	Red and blue color illumination for top camera	●	●	●
	Multi Field of View license (MFOV)	○	○	○
	Vision box for bigger components	○	○	○
	Laser height measurement	○	○	○
Dispensing valves *(Cartridge sizes)*	Piezo jet valve *(5, 10, 30 cm³)*	○	○	○
	Shockwave jet valve *(5, 10, 30 cm³)*	○	○	○
	Time/pressure valve *(5, 10, 30 cm³)*	○	○	○
	Archimedean screw valve *(5, 10, 30 cm³)*	○	○	○
	Volume dispenser valve *(10, 30, 55 cm³)*	○	○	○
	Cartridge level control	○	○	○
	Dispenser needle heating	○	○	○
Various	Standard user level management	●	●	●
	Bad mark sensing with vision	●	●	●
	Universal CAD conversion	●	●	●
	Automatic pick position correction and feeder advance optimization	●	●	●
	Automatic placement constraints	●	●	●
	Basic calibration set P&P	●	●	●
	Maintenance kit	●	●	●
	Process Improvement Tool P&P (PIT1 – 3 pictures)	●	●	●
	Key Performance Indicator (KPI with SEMI E10 standard)	○	○	○
	Barcode reading over top camera	○	○	○
	Disp. Process Control Adjustment & Stabilization (PCAS)	○	○	○
	Second touch screen for machine backside	○	○	○
	Clean room option ISO7 (class 10'000)	○	○	○
	CVU (Component Verification Unit)	○	○	○
	Tray slider (space for 2 additional JEDEC trays)	○	○	○
	Tray changer (space for up to 18 JEDEC trays)	○	○	○
	Extended feeder rack (additional feeder lanes)	○	○	○
	Recipe import in ePlace	○	○	○
	Interface for host communication: IPC-CFX, ITAC, SECS/GEM, OIC, EEIP etc.	○	○	○
	Integrated inspection system for pick & place and dispensing (SW-I2S)	○	○	○
	Jet on the fly - Extended Speed Performance (SW-ESP), see Application Matrix	○	○	○

● **standard feature** ○ **optional feature**

Machine Dimensions, Packaging and Supplies

Machine dimensions	Footprint without hood (L x W)	1380 x 1330 mm (54 x 52")
	Footprint with hood (L x W)	1557 x 1357 mm (61 x 53")
	Operating floor space (L x W)	2600 x 2500 mm (102 x 98")
	Height (without / with light tower)	1582 mm (62") / 1942 mm (76")
	Approx. machine weight (without / with full feeder)	1670 kg (3680 lb) / 1920 kg (4233 lb)
	Approx. floor loading (with full feeder)	1050 kg/m² (1.5 lb/sq.in)
	Packaging weight	80 kg (176 lb)
Supplies	Electrical	3 x 400 VAC/50Hz or with optional transformer: 3 x 190 – 600 VAC/60Hz
	Power consumption (peak)	3 kW
	Entry fuse	16A / 400V
	Min. wire cross section	1.5 mm²
	Electrical connector	400V, CEE-16, 16A, 400V, 5P 3L+N+PE 6h, red color, cable length 3 m
	Compressed air	6 – 7 bar (87 – 102 psi), clean and filtered, dry, ISO 8573-1: class 3 (max. part diameter 5µm, dew point < -20°C, oil ≤ 1 mg/m³)
	Air consumption	max. 60 Nl/min (2.1 cfm) With dispensing option vacuum cleaning station max. 90 Nl/min (3.2 cfm)
	Air connection	Push-in connector for outer hose Ø8 mm
Environment	Performance temperature range / humidity	22 – 24°C / 50 – 70% RH
	Operational temperature range / humidity	15 – 30°C / 30 – 70% RH (non condensing)
	Noise level	max. 75 dB (A)

Dimension Drawings

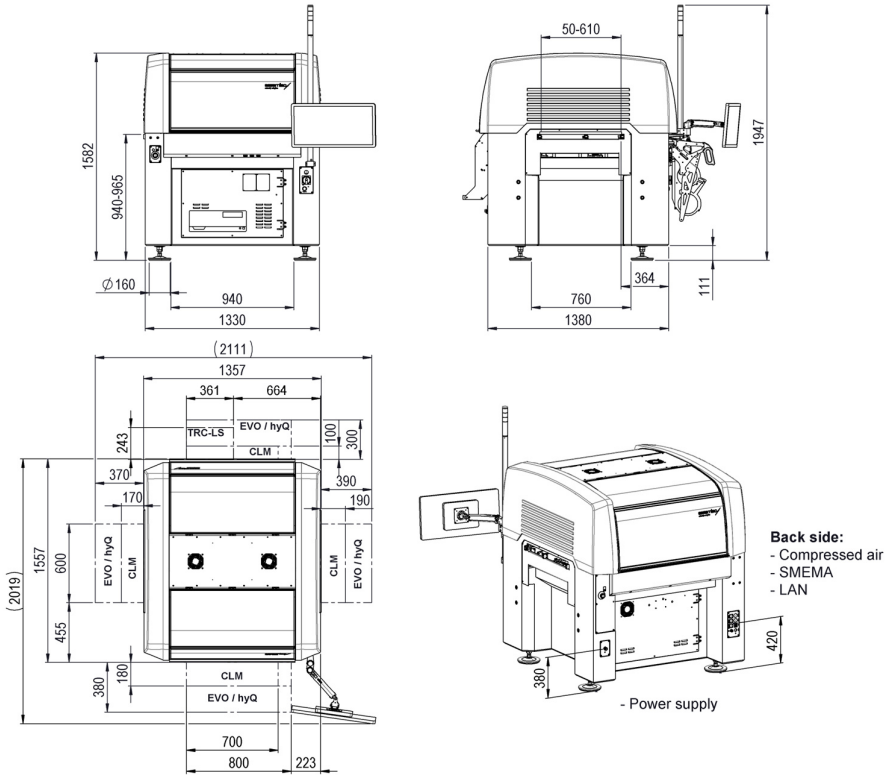

1) Values reached using EVO and hyQ feeder type only
2) Maximum valve frequency, using settings from solder paste Application Matrix with Jet-on-the-Fly capability (req. SW-ESP license)
3) Dot matrix 33x33 with pitch 1.0 x 1.0 mm, using settings from solder paste Application Matrix with Jet-on-the-Fly capability (req. SW-ESP license)
4) Average of 17x different industrial PCB, using settings from solder paste Application Matrix with Jet-on-the-Fly capability (req. SW-ESP license)
5) Maximum valve frequency
6) Dot matrix 33 x 33 with pitch 0.8 x 0.8 mm, dot size 0.5mm, medium Loctite 3621
7) Under conditions specified by Essemtec
8) Used speed mode "very accurate", up to 3 different speed modes available. Measured with chip 0402 and glass QFP100. Only applicable at zero height and within performance temperature / humidity range.

For more information ask for the PUMA ULTRA System Description and Product Notes.

Disclaimer & Copyright:

We reserve the right to make changes without notice. All materials contained in this brochure are copyright © Essemtec AG, Switzerland, August 2026.