VOLIRO

Voliro T
Wind turbine LPS inspection guide

Advantages of drone-enabled LPS wind turbine inspections 04

Voliro equipment 06

Inspection workflow 08

Inspection mission variables 16

Mission examples 17

Inspected wind turbines models 18

Operator discovery questions for Voliro LPS inspections 22

Wind turbine lightning protection systems (LPS) can suffer damage from lightning strikes. Regular maintenance and inspections are vital to ensure the continued effectiveness of LPS in protecting wind turbines from lightning-related damage.

Advantages of Voliro's drone-enabled LPS wind turbine inspections

5x faster LPS inspections
Voliro's drone inspections typically take 20 to 30 minutes per turbine, reducing downtime and operational costs.

Effective data collection
Gather clear insights and immediate results on the turbine's LPS condition, with seamless reporting ready for integrity interpretation.

Small crew operation
A single pilot can operate the inspection workflow efficiently, with optional support from a technician if needed.

Ensure compliance
Voliro's inspection method adheres to IEC/EN 61400-24 standards for LPS testing on wind turbines, guaranteeing quality control and reliability.

Efficient LPS inspection data collection with minimal turbine downtime

By eliminating the need for human access to difficult-to-reach areas, Voliro drones make inspections safer, faster, and data enhanced by empowering proactive wind turbine maintenance.

Voliro T inspection method:

- 4-wire resistance measurement
- 1 person operation
- Single and multi rotor stop supported*
- Inspect up to 250 m (820 ft) in height
- No access to the hub or nacelle required (unless bridging for continuity is needed)

* Depending on the wind speeds the most efficient method is chosen.
Learn more under “LPS Inspection Mission Variables” section.

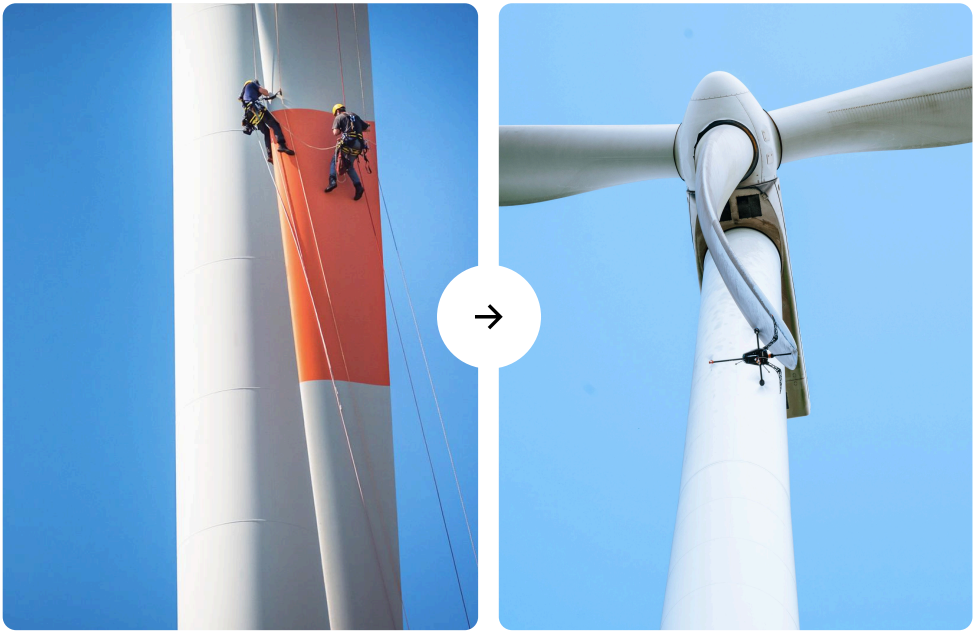

Evolution of wind turbine LPS inspections, showcasing how Voliro T’s drone technology offers a safer, faster, and more cost-effective alternative to traditional rope-access methods.

Voliro equipment

1 Voliro T

Wind resistance	8 m/s / 17 mph for contact, 12m/s / 26 mph for free flight
Temperature	-10 to 40 °C / 14 to 104 °F
Precipitation	Dry weather operation only; No rain, no snowfall
Fog	No operation in fog

2 Needle probe payload

3 LPS Ground Station

Tether length	250 m / 820 ft
Grounding cable	50 m / 164 ft
Measurement method	4-wire measurement
Measurement current	0.30 A (for resistances <20 Ω)
Measurement range	0.001 Ω to 1000 Ω
Resolution	0.01 mΩ
Max. Voltage	26 V
Compliant with	IEC/EN 61400-24 standards

1

2

3

Inspection workflow

Step 1: Equipment and wind turbine setup

Step 2: Inspect

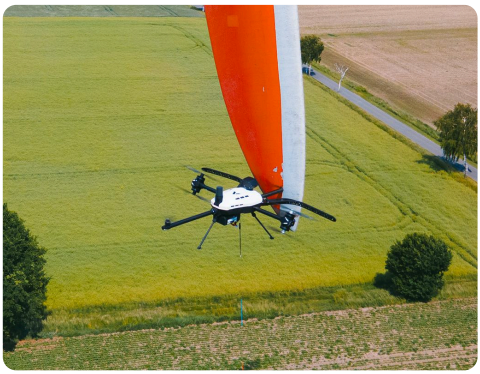

Step 3: Report

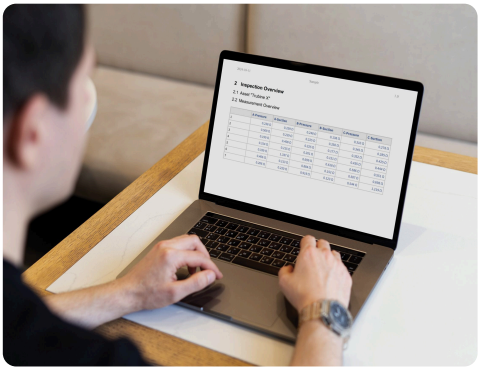

Step 1: Equipment and wind turbine setup

Equipment setup

- Place the LPS Ground Station and Ohmmeter 20–30 m (65–98 ft) in front of the turbine tower, parallel to the rotor.
- Connect the grounding cable to a grounded point at the turbine base as seen in image A.
- Connect the Grounding cable to the Ground Station with as seen in image B.
- Assemble the Voliro T and attach the LPS payload as well as the cable to the drone.
- The Ground Station runs on a Voliro T battery - one battery usually lasts a full day of inspections.

A

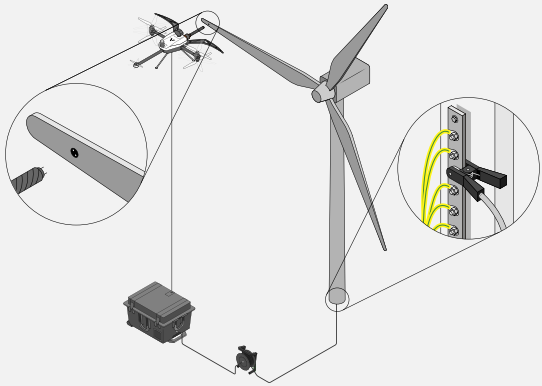

B

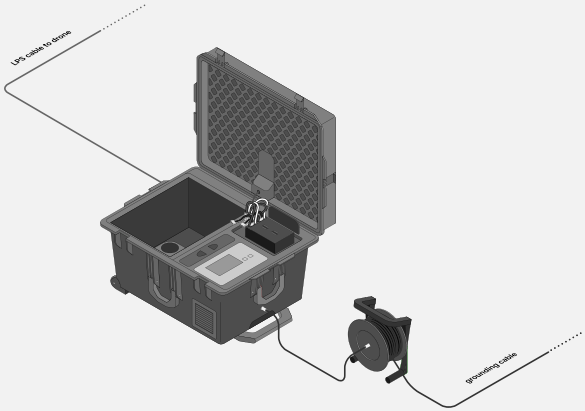

Wind turbine setup

Option A: One-stop inspection:
The rotor is placed into the Y position. Blades which are not in the 6 or 12 o'clock position have to be pitched to 0°.

Option B: Three-stop inspection:
Inspect each blade in the 6 o'clock position. Keep the rotor facing the wind, i.e. keep the yaw angle.

Wind turbine setup (1-stop inspection):
At low wind speeds (below 6 m/s), this method offers the fastest inspection mode. The drone is able to inspect all blades in a single flight, maximizing efficiency.

Wind turbine setup (3-stop inspection):
At higher wind speeds, this method offers a safer inspection approach. The blades are repositioned twice to always inspect the 6 o'clock blade - no blade pitching required.

Spark gap bridging

The inspection of the LPS of wind turbines using the Voliro T equipment requires continuity of the LPS from the blade to the bottom of the tower. Some wind turbines have a discontinuity of the LPS at the hub or nacelle. These can be bridged by installing a jumper cable:

- A technician needs to access the hub of the turbine.
- The cable is installed between an accessible point of the LPS on the blade and an accessible point of the LPS in the hub or nacelle.
- Usually one blade is bridged at a time.
- Typically, each blade is bridged in the 6 o'clock position. If required by the turbine design, use the 3 or 9 o'clock position instead.

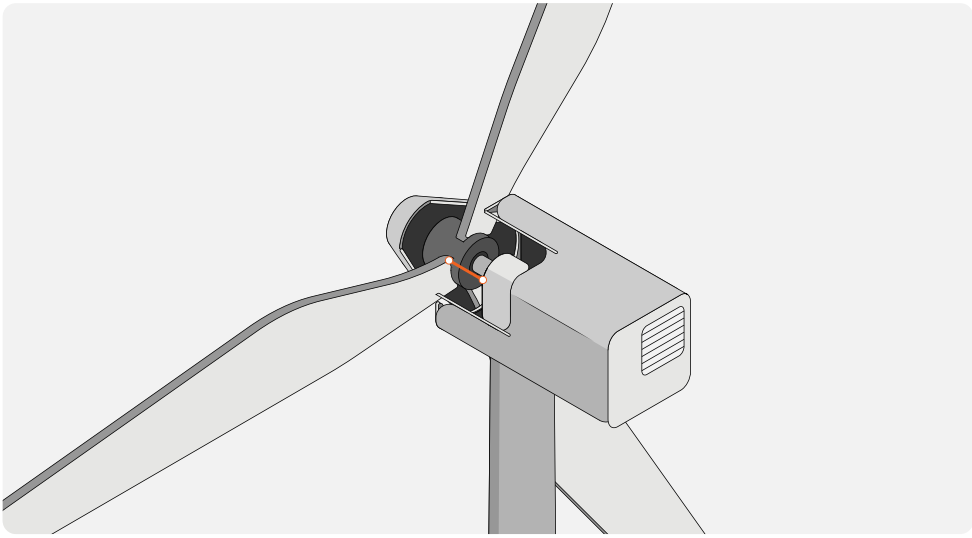

Step 2: Inspect

1. Contact & Inspection

- The pilot flies the drone to the blade and establishes contact with the LPS receptors, closing the electrical circuit with the wind turbine's LPS.
- This enables an electrical resistance measurement of the wind turbine's LPS.
- The LPS Ground Station automatically reels the tether in and out, keeping it taut - no manual adjustments needed.

2. Flight & Alignment

- Fly in Visual Line of Sight (VLOS) until near the turbine blade.
- Switch to FPV camera for the final approach.
- Built-in sensors assist with drone alignment to the blade.
- Use the autonomous interaction mode to establish and hold contact with the blade.

3. Resistance Measurement

- Both the grounding cable and drone tether have 2 phases inside, enabling a 4-wire resistance measurement (IEC 61400-24 compliant).
- This ensures the measurement captures only the electrical resistance from the contact point on the blade to the grounding clamp at the bottom of the tower.
- A certified, third-party Ohmmeter pushes a current of 300 mA through the circuit and records the resistance.
- The resistance data is sent to the drone and stored on the on-board computer as well as redundantly on the Ohmmeter. The on-board computer links each measurement directly to the correct receptor.
- Measurements can be verified in real-time by the operator on the control tablets.

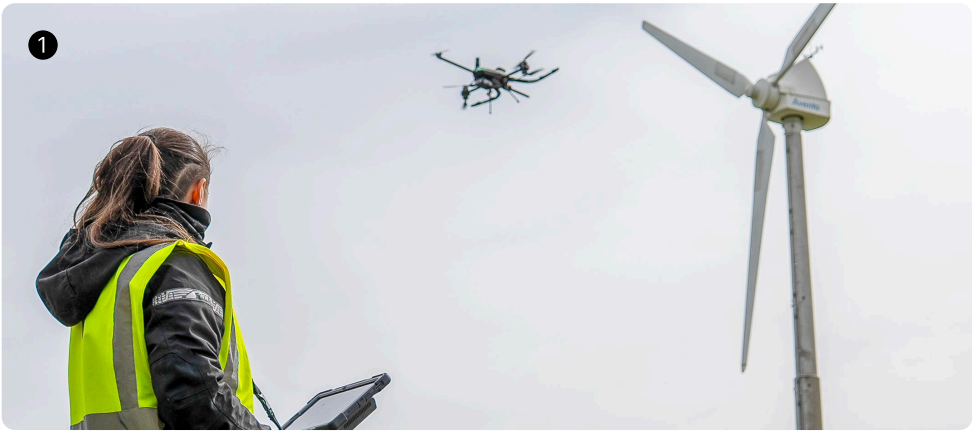
1

2

3

Step 3: Report

- Upload data to Voliro's reporting tool to auto-generate a PDF report including an image of every LPS receptor.
- Alternatively, export data as CSV or JSON for use in third-party tools or custom reports.

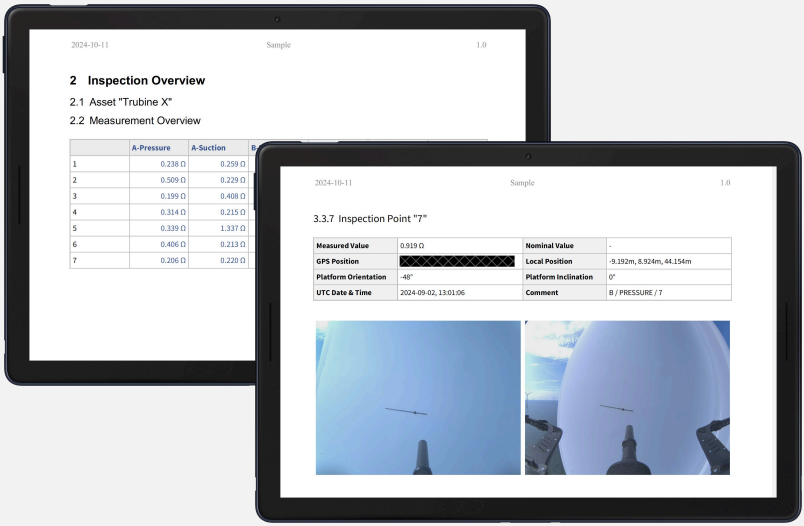

Preview of the auto-generated PDF inspection report. Both views are included in one single report.

Data interpretation

Receptor measurement data provide critical insights into the integrity of the LPS system. Specific defect patterns indicate different failure modes, such as:

- **All receptors disconnected on one blade:**
  Likely caused by a defect at the blade root or in the hub / nacelle.
- **Single receptor disconnected:**
  Typically due to an individual receptor being disconnected or oxidation.
- **Multiple receptors disconnected:**
  Damage within the down conductor, e.g. between different receptor pairs (3a) or at the connection of two separate blade parts (3b).

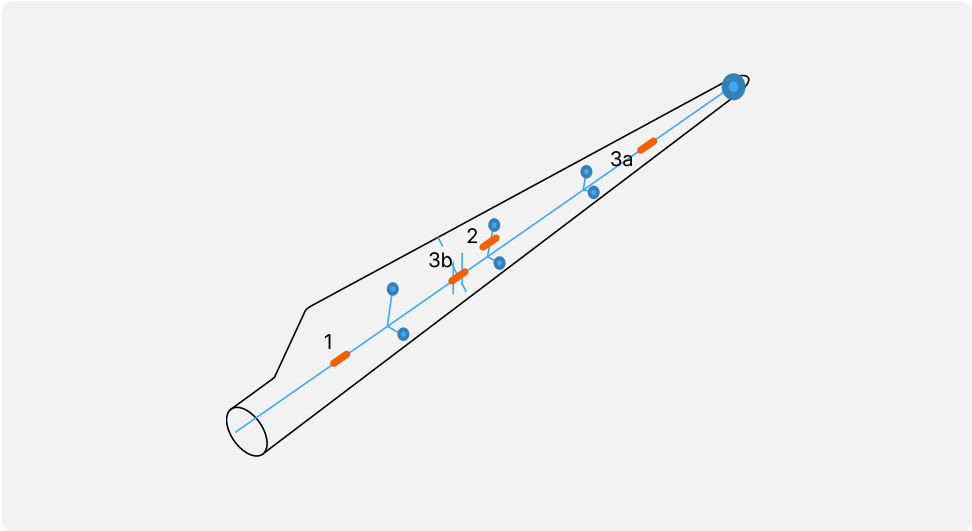

LPS inspection mission variables

The following table categorizes the complexity of missions undertaken with the Voliro T drone for Lightning Protection System (LPS) inspections of wind turbines. The complexity is determined by several factors, including nacelle access requirements, wind speed, turbine location, number of receptors, and receptor type.

Mission Complexity	Low	Medium	High
Nacelle access / bridging	Not required		Bridging required
Wind speed	<5 m/s	5-8 m/s	8 m/s, gusty
Number of receptor per blade	2	4-6*	8-16*
Location	Onshore		Offshore
Receptor type	Metal tip	Standard receptor plug	Bulb, Tip winglet
Team	Highly experienced pilot + assistant	Medium experienced pilot	Low experienced pilot

* It is recommended to inspect the 2 receptors closest to the tip and only inspect the remaining receptors in case defects were found on these 2 receptors.

Mission examples

This table provides representative mission examples from actual Voliro T operations. It is illustrative only and does not represent the full operational capacity of the technology.

Mission Complexity	Low	Medium	High
Country	United States	Austria	Germany
Turbine model	GE 2.82-127	V150/4200	SWT-6.0-154
Nacelle access/ bridging	Not required	Required	Not required
Wind speed	5 m/s	6 m/s	7-8 m/s
Numbers of receptors per blade	2	8	10
Location	Onshore	Onshore	Offshore
Receptor type	Standard receptor plug	Standard receptor plug	Standard receptor plug
Time per turbine incl. setup	20-30 min	30-60 min	60 min +
Team	Highly experienced pilot	Medium experienced pilot	Highly experienced pilot + assistant

* The inspection speed is reduced if defects in the LPS are found and if the mission is a proof of concept / product demonstration.

Inspected wind turbines models

The following list provides an overview of wind turbine models that have been successfully inspected using the Voliro T for Lightning Protection System (LPS) assessments. However, this list is not exhaustive, and we are committed to meeting our clients' unique needs by extending our inspection services to additional turbine models upon request.

Wind Turbine Model	Manufacturer
V47/660	Vestas
V90/2000*	Vestas
V100/2000*	Vestas
V110/2200	Vestas
V112/3000*	Vestas
V150/4000-4200*	Vestas
V112/3300*	Vestas
V117/3300*	Vestas
V117/3600	Vestas
V136/3450*	Vestas
V150/4.5MW*	Vestas
V162/6.2MW*	Vestas
SWT-2.3-93	Siemens
SWT-2.3-108	Siemens
SWT-2.3-113	Siemens
SWT-2.5-108	Siemens
SWT-2.6-120	Siemens
SWT-3.2-113	Siemens
SWT-3.6-107	Siemens
SWT-6.0-154	Siemens

Wind Turbine Model	Manufacturer
MM100	Senvion
3.2 M114	Senvion
3.4 M104	Senvion
3.4 M114	Senvion
MM92/2050	Senvion
6.2 M126	Senvion
N60/1300	Nordex
N90/2500	Nordex
N117/3000	Nordex
N131/3600	Nordex
N149/4.0-4.5	Nordex
N155/4.5	Nordex
N133/4800	Nordex
N163/5.X	Nordex
NM52/900	NEG Micon
NM64c/1500	NEG Micon
B62/1300	Bonus
V77-1500*	IMPSA
GE 5.X-158	GE Vernova
GE 1.7-100	GE Vernova

Wind Turbine Model	Manufacturer
GE 1.6-100	GE Vernova
GE 1.85-87	GE Vernova
GE 2.3-116	GE Vernova
GE 2.5-127	GE Vernova
GE 2.52-116	GE Vernova
GE 2.75-120	GE Vernova
GE 2.8-127	GE Vernova
GE 3.2-103	GE Vernova
GE 3.4-140	GE Vernova
GE 3.4-137	GE Vernova
GE 3.6-137	GE Vernova
GE5.3-158	GE Vernova
GE4.8-158	GE Vernova
GE5.5-158	GE Vernova
Haliade-X 12MW	GE Vernova

Wind Turbine Model	Manufacturer
G52/850	Gamesa
G90/2000	Gamesa
G114/2000*	Gamesa
G114/2500*	Gamesa
G132/3450*	Gamesa
E82*	Enercon
S88/2100*	Suzlon
AW-3000/116	Acciona
AW-3000/125	Acciona
AW-1500/77	Acciona
ECO 86	Alstom
ECO 122	Alstom
AGW 147/4.2	WEG
AGW 110/2.1	WEG

* Access to nacelle needed

LPS inspections done by the Voliro T around the world

- Argentina
- Australia
- Austria
- Belgium
- Brazil
- Canada
- Croatia
- Denmark
- England
- Finland
- France
- Germany
- Indonesia
- Ireland
- Italy
- Netherlands
- Norway
- Scotland
- Sweden
- Switzerland
- Thailand
- United States
- Uruguay
- Wales

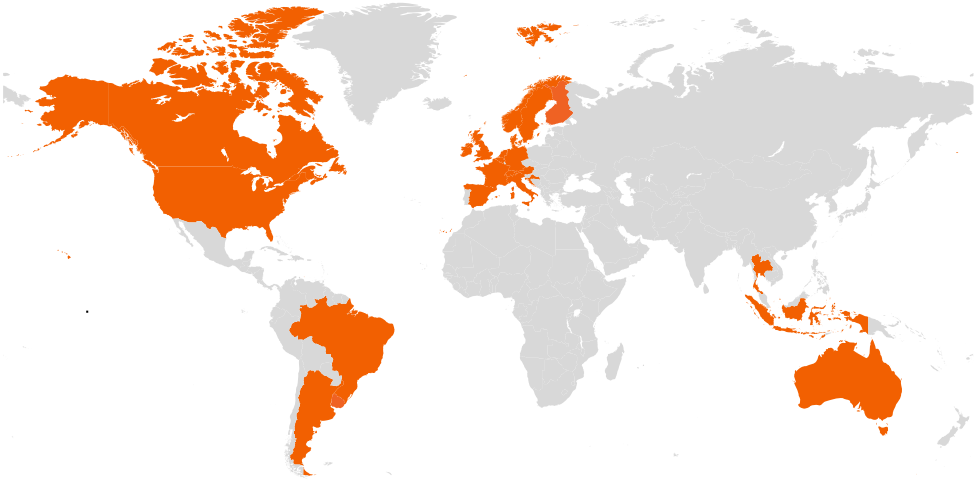

Trusted by leading companies

ACUREN	TIDALIS	arthwind
zeitview	MINERVA ENERGY PRECISION DRIVEN EXCELLENCE	ALERION
intertek	Deutsche Drohnen Inspektion	SRG GLOBAL
HORUS SOLUTIONS NAVIGATING FUTURE	Power Technology	AEROMEDIA
cornis	GRUPO DR1	CAPSTONE INFRASTRUCTURE
Robotics	TAYLOR MADE INSPECTIONS	SKYSPECS
LEXCOM INSPECCIONES	CUPERTINO	Aker Solutions

Operator discovery questions for Voliro LPS inspections

1. Turbine specifications

- Turbine OEM and model
- Is there continuity of the LPS inside the wind turbine or is there a spark gap inside the hub or nacelle which needs to be bridged for a continuous measurement?
- What is the number of LPS receptors per blade?
  - Shall every receptor be inspected or inspect the tip one and only in case of detected defects inspect all receptors?
  - Do the blades have any non standard receptor types?
  - Are any LPS receptors painted / coated?

2. Operating procedure

- Turbine control
  - Can each blade be pitched separately?
  - What is the technician availability from the client during the inspection to control the turbine?
- Shall the ground wire for the measurement be connected to a specific grounded point in the base of the turbine or any grounded point?

3. Measurement interpretation

- Any specific requirements from the turbine OEM?
- Shall the requirements from the German Bundesverband Windenergie be used?

Measurement	Interpretation
0 - 1 Ohm	LPS is in a good state
1 - 10 Ohm	LPS needs to be monitored
>10 Ohm or no connection / open circuit	LPS needs to be fixed

Voliro AG
Förrlibuckstrasse 150
CH-8005 Zurich
Switzerland

Voliro Inc
3302 Canal Street
Houston TX 77003
United States

contact@voliro.com
www.voliro.com