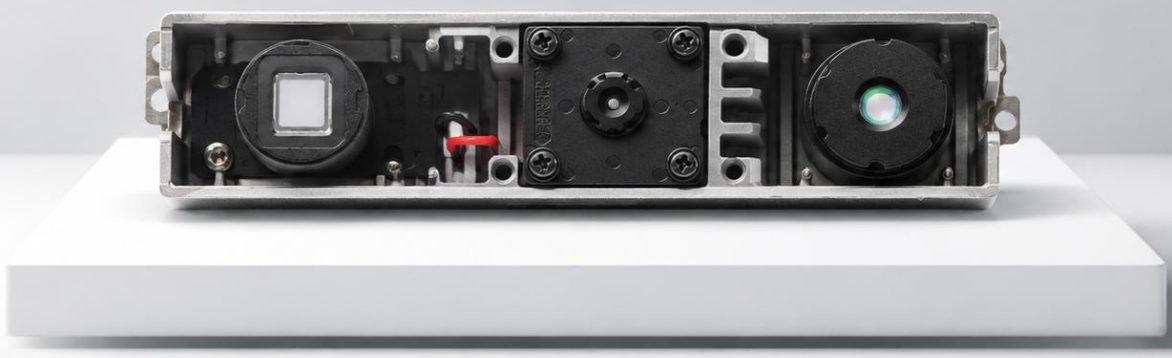

Astra Mini Pro Series

Datasheet

Version 1.1

Copyright Orbbec Inc. All rights reserved. The product described may contain defects or errors or deviations from the published specifications. Contact your sales representative to obtain the latest Orbbec product specifications. Orbbec is not responsible for any users infringing on third party copyright or other rights in the use of Orbbec products. In addition, Orbbec does not assume any liability for damages or any losses resulting from the use of this product. All information provided here is subject to change without notice.

Revision History

Version	Description	Revision Date
V1.0	● Initial release	2023-08-03
V1.1	● Integrate the Orbbec Astra Mini Pro and Orbbec Astra Mini S Pro into a single specification document: Astra Mini Pro Series datasheet.	2026-05-19

ORBBEC. All Rights Reserved. https://www.orbbec.com/

Note: Orbbec reserves the right to change any information in the document without prior notice.

Contents

0.Glossary 6

1. Product Brief 8

2. Product Specifications 9

3. Product Information 11

3.1 Product Pictures 11

3.2 Product Drawings 12

3.2.1 Product Dimensions & Weight for Astra Mini Pro series 13

3.3 Product Components 14

3.3.1 Overview of Product Components for Astra Mini Pro Series 14

3.3.2 Laser Diode Module 15

3.3.3 Infrared Module 16

3.3.4 RGB Module 16

4. Functional Specifications 17

4.1 Vendor Identifier (VID) and Product Identifier (PID) 17

4.2 Platform and System Requirements 17

4.3 Camera system Framework 18

4.4 Image Data Stream 19

4.5 Depth to Color Alignment 20

4.6 Camera Start Point Reference 21

5. Performance 22

5.1 Electrical Performance 22

ORBBEC. All Rights Reserved. https://www.orbbec.com/

Note: Orbbec reserves the right to change any information in the document without prior notice.

5.1.1 Power Supply 22
5.1.2 Power Consumption 22
5.1.3 Storage and Powered Conditions 22
6. Firmware 23
6.1 Firmware Update & Cautions 23
6.2 How to Update Firmware 23
6.3 Recovery 23
7. SDK 24
7.1 Temperature Sensor and Recording 24
8. Use Guidance 25
8.1 Packing List 25
8.2 Initialization and Operation 25
9. Regulatory Compliance 26
9.1 Laser Safety certification 26
9.2 EMC Regulatory Compliance 26
9.3 Environment Regulatory Compliance 26
10. System Integration Guide 27
10.1 Installation Recommendations 27
10.2 Heat Dissipation 28
10.3 Cover Glass Requirements 29
10.3 Cable Design Guide 30
11. Cautions 31

ORBBEC. All Rights Reserved. https://www.orbbec.com/

Note: Orbbec reserves the right to change any information in the document without prior notice.

Appendix A Camera 2D Structural Drawings 32

Appendix B Cable Design Reference Drawings 33

ORBBEC. All Rights Reserved. https://www.orbbec.com/

Note: Orbbec reserves the right to change any information in the document without prior notice.

0.Glossary

Terms	Descriptions
AMR	Autonomous Mobile Robot（AMRs） refer to a type of robots that can navigate and perform tasks autonomously. Equipped with sensors and control systems, AMRs can move and operate in complex environments without human intervention.
ASIC	Application-specific Integrated Circuit.
Baseline	The distance between the optical centers of the two cameras used for depth calculation.
D2C	Depth to Color maps each pixel on a depth map to the corresponding color image according to the intrinsic and extrinsic parameters of the depth camera and color camera.
Depth	Depth video streams are similar to color video streams except each pixel has a value representing the distance away from the sensor instead of color information.
Depth Camera	Includes depth imaging module and external interface, of which the former is generally composed of an infrared projector, infrared camera, and depth computing processor.
FOV	Field of View describes the angular extent of a given scene that is captured by a camera, which can be measured in the horizontal, vertical, and diagonal.
I2C	Refers to a simple bi-directional two-wire synchronous serial bus developed by Philips.
IMU	Inertial measurement unit.
IR	Light in the infrared spectrum, which ranges from 700 nm and above.
IR Camera	A camera capable of seeing light in the IR spectrum.
ISP	Image signal processor, which is used for image post-processing.
LDM	The Laser Diode Module (LDM) projects an infrared (IR) speckle pattern onto the scene, providing artificial texture for the 3D camera. This enables accurate depth measurement, even on low-texture surfaces or under challenging lighting conditions.

ORBBEC. All Rights Reserved. https://www.orbbec.com/

Note: Orbbec reserves the right to change any information in the document without prior notice.

MIPI	Mobile Industry Processor Interface (MIPI) Alliance. MIPI is an open standard and specification formulated by the MIPI Alliance for mobile application processors.
PCBA	PCBA (Printed Circuit Board Assembly) refers to a fully assembled printed circuit board (PCB) that includes all the electronic components mounted and soldered onto it.
Point Cloud	A discrete set of data points in space.
RGBM/RGB Module	Color Camera
ROI	Region of Interest(ROI) in image processing refers to a specific area selected from the entire image.
SOM	A System on Module (SoM) provides various core components of an embedded processing system on a single printed circuit board, including the processor core, communication interfaces, and memory modules. A typical example of this is the NVIDIA Jetson series products.
SBC	A Single Board Computer (SBC) is a microcomputer where all the logic circuits, timing circuits, internal memory, and external interfaces are integrated onto a single printed circuit board. A typical example is the Raspberry Pi.
SoC	System on Chip, an integrated circuit (IC) that integrates all components of a computing system.
UVC	USB Video Class (UVC) is a protocol standard defined for USB video capture devices and has become one of the USB.org standards.
VCSEL	Vertical-Cavity Surface-Emitting Laser (VCSEL) is a type of semiconductor laser where the laser light is emitted perpendicular to the surface of the device.
DoF	Degree of Freedom, In an Inertial Measurement Unit(IMU), 6DoF means the device can measure all six degrees of freedom.
dToF	Direct Time-of-Flight(dToF) achieves high-precision distance measurement by directly tracking light pulse travel time.
TBD	To Be Determined. Information will be provided in a later revision.

ORBBEC. All Rights Reserved. https://www.orbbec.com/

Note: Orbbec reserves the right to change any information in the document without prior notice.

1. Product Brief

The Orbbec Astra Mini Pro series 3D cameras are provided in module form for easy embedded integration into customer devices. Based on structured light technology and equipped with Orbbec's custom ASIC, they achieve high-quality depth processing with only a single USB 2.0 cable for both power and data transmission.

Astra Mini S Pro (Near-range version) and Astra Mini Pro (Far-range version) provide developers with more flexible and rich ranging options, allowing them to select the most suitable model based on actual operational requirements.

With Orbbec SDK, Astra Mini Pro series cameras are easy to deploy and provide high-precision, high-reliability data support for indoor operations.

Application Scenarios	• Robot obstacle avoidance • Motion interaction • 3D measurement
Recommendation systems	Windows • Windows 10,32bit/64bit • USB2.0（0.5A） • Recommended: Dual-core processor, 2.2 GHz or higher • Recommended: 4 GB RAM or above Android • Android 9.0 • USB2.0 (0.5A,Support host) • Recommended: RK3588 • Recommended: 2 GB RAM or higher Linux • Ubuntu 18.04 • USB2.0 (0.5A) • Recommended: RK3588 • Recommended: 2 GB RAM or higher

ORBBEC. All Rights Reserved. https://www.orbbec.com/

Note: Orbbec reserves the right to change any information in the document without prior notice.

2. Product Specifications

Parameter	Astra Mini Pro	Astra Mini S Pro
Use Environment	Indoor	Indoor
Technology	Monocular Structured Light	Monocular Structured Light
Baseline	55mm	55mm
LDM Wavelength	855nm	855nm
Working Range[1]	0.6-6m+	0.4-2m+
Ideal Range	0.6-5m	0.4-2m
Spatial Precision[2]	3mm@1m	3mm@1m
Depth Resolution @ Frame Rate	1280x1024@7fps Y16 640x480@10/15/30fps Y16 320x240@10/15/30fps Y16 160x120@10/15/30fps Y16	1280x1024@7fps Y16 640x480@10/15/30fps Y16 320x240@10/15/30fps Y16 160x120@10/15/30fps Y16
Depth FOV	H58.4° V45.5° D70°±5°@1m	H58.4° V45.5° D70°±5°@1m
Sensor Type	IR: Rolling Shutter Color: Rolling Shutter	IR: Rolling Shutter Color: Rolling Shutter
RGBM Resolution @ Frame Rate	1280x960@7fps YUYV 640x480@10/15/30fps YUYV 320x240@10/15/30fps YUYV	1280x960@7fps YUYV 640x480@10/15/30fps YUYV 320x240@10/15/30fps YUYV
RGB Module FOV	H62.7° V49° D75.1°±5°	H62.7° V49° D75.1°±5°
Depth Processing	In-camera processing using Orbbec MX6000 ASIC	
Data Connection	USB 2.0 DF13 Connector	
Power Consumption	Average <2.0W, Peak <2.5W	Average <2.0W, Peak <2.5W
Operating Environment	10℃ - 40℃, 5% ~ 95% RH (No Condensation)	10℃ - 40℃, 5% ~ 95% RH (No Condensation)
Storage Environment	Short Term: -20℃ - 70℃,5%~90% RH (non-condensing) Long Term: 0℃ - 60℃, 5%~90% RH (non-condensing)	
Supported Functions	Hardware spatial alignment of depth to color UVC camera	
Dimensions	84.90 × 20.00 × 19.92 mm	84.90 × 20.00 × 19.92 mm

ORBBEC. All Rights Reserved. https://www.orbbec.com/

Note: Orbbec reserves the right to change any information in the document without prior notice.

Weight	34g±5g	34g±5g
Lifespan[3]	3 Years: Default Operating Mode & Operating Environment	3 Years: Default Operating Mode &Operating Environment

Notes:

[1] For objects with reflectivity > 20%, Astra Mini Pro can provide depth data up to 6m+, and Astra Mini S Pro up to 2m+. Actual accuracy varies with distance and measured object.

[2] Test object is a plane with reflectivity > 80%, reference range is 81% FoV (center 81% area after cropping 5% from each side of depth map). Standard deviation of absolute distance from all valid points to fitted plane.

[3] DF13 Connector Specification: https://www.hirose.com/product/series/DF13#

[4] Actual power consumption in typical operating mode with RGB (640x480@30fps) and Depth (640x480@30fps) streams simultaneously enabled.

[5] Service life under typical operating mode at 10-40℃ environment, continuous operation 8 hours per day.

ORBBEC. All Rights Reserved. https://www.orbbec.com/

Note: Orbbec reserves the right to change any information in the document without prior notice.

3. Product Information

3.1 Product Pictures

Table 3-1-1 Product pictures for Astra Mini Pro Series

Name	Astra Mini Pro/Astra Mini S Pro

ORBBEC. All Rights Reserved. https://www.orbbec.com/

Note: Orbbec reserves the right to change any information in the document without prior notice.

3.2 Product Drawings

3.2.1 Product Drawings for Astra Mini Pro /Astra Mini S Pro

Table 3-2-1 Product drawings for Astra Mini Pro /Astra Mini S Pro

Name	Astra Mini Pro/Astra Mini S Pro
Front View	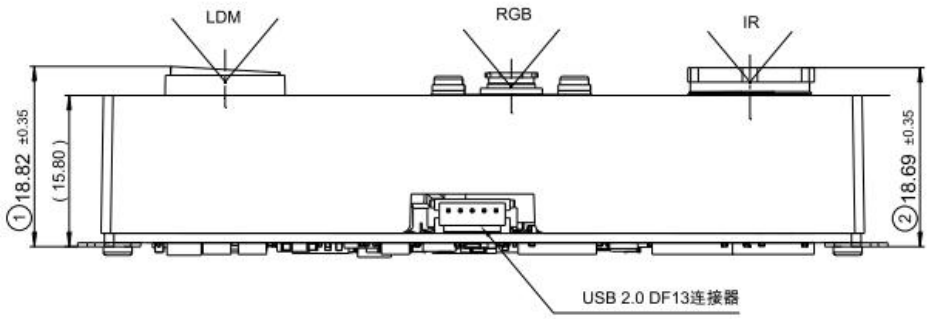
Top View	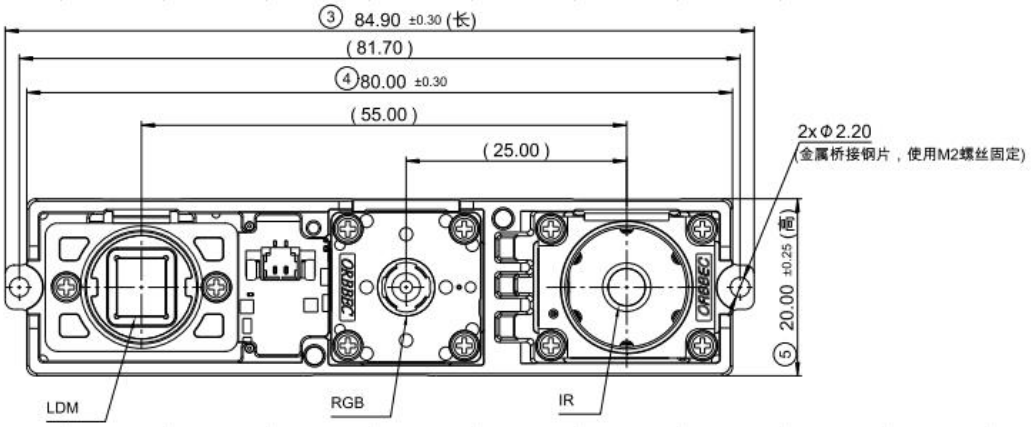
Side View	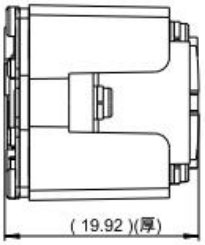

ORBBEC. All Rights Reserved. https://www.orbbec.com/

Note: Orbbec reserves the right to change any information in the document without prior notice.

3.2.1 Product Dimensions & Weight for Astra Mini Pro series

Table 3-2-1 Product dimensions & weight for Astra Mini Pro series

Name	Astra Mini Pro	Astra Mini S Pro
Width/mm	84.90	84.90
Height/mm		

ORBBEC. All Rights Reserved. https://www.orbbec.com/

Note: Orbbec reserves the right to change any information in the document without prior notice.

3.3 Product Components

3.3.1 Overview of Product Components for Astra Mini Pro Series

Table 3-3-1 Overview of product components for Astra Mini Pro/Astra Mini S Pro

Astra Mini Pro/Astra Mini S Pro
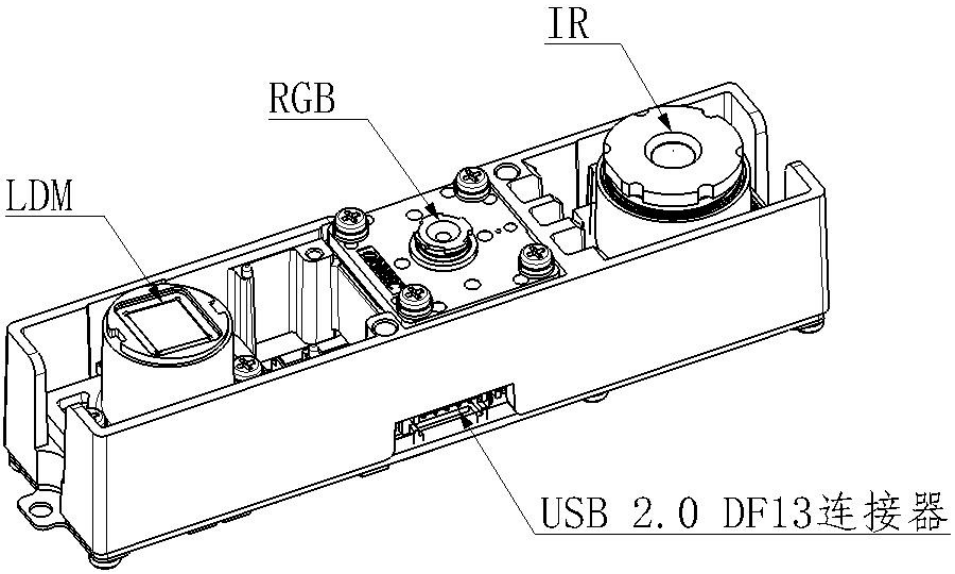
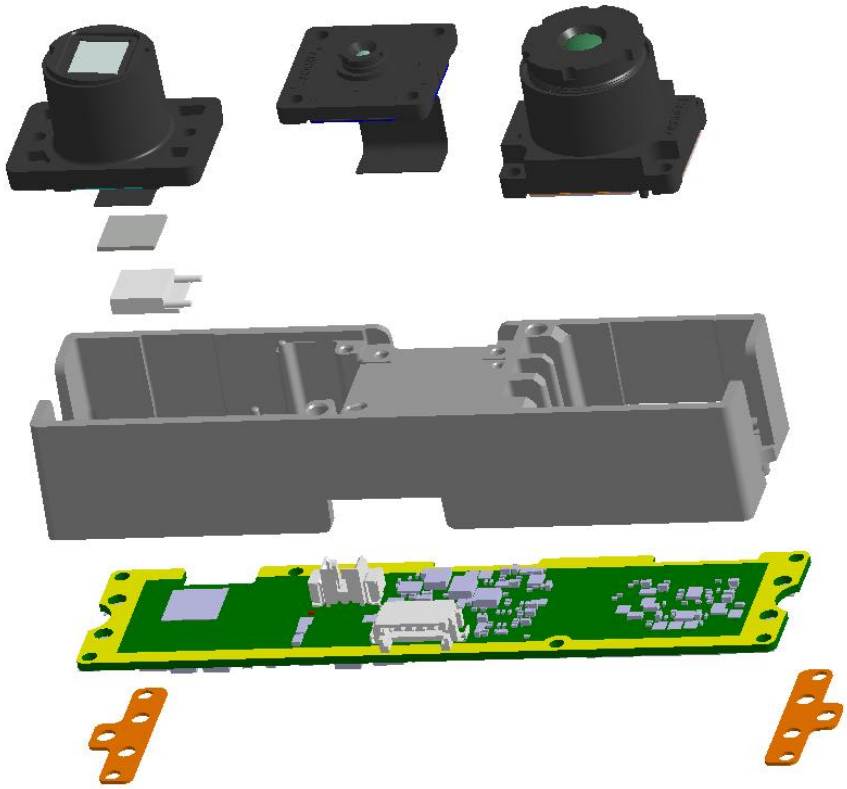

ORBBEC. All Rights Reserved. https://www.orbbec.com/

Note: Orbbec reserves the right to change any information in the document without prior notice.

3.3.2 Laser Diode Module

The laser module (LDM) comprises an array of vertical cavity surface emitting lasers and other optic components. It enhances the depth camera system's ability to detect depth information by projecting static infrared patterns onto the scene, adding texture to low- texture scenes. The Astra Mini Pro series laser module is a Class 1 Laser Product under normal conditions.

Table 3-3-2 LDM parameters

LDM	Astra Mini Pro/Astra Mini S Pro
Type	Infrared
Component	Single-point edge-emitting laser + optical components
Laser Controller	Constant current
Wavelength	855nm
Laser Compliance*	Class 1, IEC 60825-1:2007 Edition 2, IEC 60825-1:2014 Edition 3 FDA number: 2420619-000
Horizontal FOV	67.3°
Vertical FOV	51.0°
FOV tolerance	±5.0°

Note: * LDM is considered Class 1 when integrated into Orbbec's 3D Cameras.

ORBBEC. All Rights Reserved. https://www.orbbec.com/

Note: Orbbec reserves the right to change any information in the document without prior notice.

3.3.3 Infrared Module

Table 3-3-3 Infrared module parameters

IR Module	Astra Mini Pro/Astra Mini S Pro
Filter Type	IR 855nm narrow band
Active Pixels	1280×1024
Sensor Aspect Ratio	5:4
Focus Type	Fixed
Shutter Type	Rolling shutter
Horizontal FOV	58.4°
Vertical FOV	45.5°
Diagonal FOV	70°
FOV tolerance	±5.0°
Distortion	<1.5%

3.3.4 RGB Module

Table 3-3-4 RGB module parameters

RGB Module	Astra Mini Pro/Astra Mini S Pro
Filter Type	Visible light band
Active Pixels	1296×976
Sensor Aspect Ratio	4:3
Focus Type	Fixed
Shutter Type	Rolling shutter
Horizontal FOV	62.7°
Vertical FOV	49°
Diagonal FOV	75.1°
FOV tolerance	±5.0°
Distortion	<1.5%

ORBBEC. All Rights Reserved. https://www.orbbec.com/

Note: Orbbec reserves the right to change any information in the document without prior notice.

4. Functional Specifications

4.1 Vendor Identifier (VID) and Product Identifier (PID)

Table 4-1-1 VID & PID table

Name	Astra Mini Pro	Astra Mini S Pro
Model	A25101-05	A25100-05
PID	0x065B	0x065E
VID	0x2BC5	

4.2 Platform and System Requirements

Astra Mini Pro series connect to the host computer using USB, which is compatible with various platforms and system requirements.

Table 4-2-1 Astra Mini Pro series Recommended Platforms and Systems

Chip	x86/x64		ARM	
OS	Windows 10, 32bit/64bit	Ubuntu18.04/20.04	Android 8.0/9.0	Ubuntu 18.04
USB	USB 2.0	USB 2.0	USB 2.0	USB 2.0
CPU	Quad-core, 2.2GHz	Quad-core, 2.2GHz	RK3588	RK3588
RAM	4GB RAM and above	4GB RAM and above	2GB RAM and above	2GB RAM and above

ORBBEC. All Rights Reserved. https://www.orbbec.com/

Note: Orbbec reserves the right to change any information in the document without prior notice.

4.3 Camera system Framework

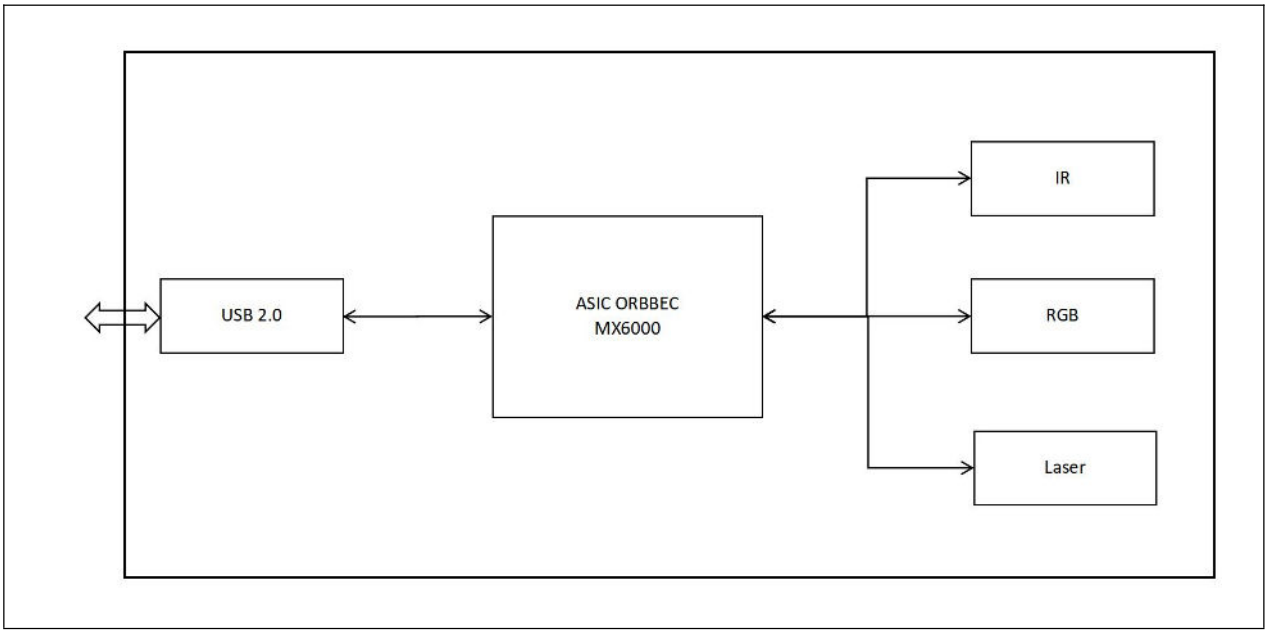

Figure 4-3-1 Astra Mini Pro series System Framework Diagram

ORBBEC. All Rights Reserved. https://www.orbbec.com/

Note: Orbbec reserves the right to change any information in the document without prior notice.

4.4 Image Data Stream

Astra Mini Pro series provides depth data acquisition and output. Depth data is generated through 3D structured light technology and can collect and output depth data of objects between 0.4m-6m [Astra Mini S Pro: 0.4m-2m, Astra Mini Pro: 0.6m-6m]. The depth map output format is Y16.

Table 4-4-1 Output data streams -Astra Mini Pro/Astra Mini S Pro

Astra Mini Pro/Astra Mini S Pro	Data Format	Aspect Ratio	Resolution	Frame Rate
Depth	Y16	5:4	1280x1024	7
		4:3	1280x960	7
			640x480	10, 15, 30
			320x240	10, 15, 30
			160x120	10, 15, 30
IR	Y8	5:4	1280x1024	7
		4:3	1280x960	7
			640x480	10, 15, 30
			320x240	10, 15, 30
			160x120	10, 15, 30
RGB	YUYV	4:3	1280x960	7
			640x480	10, 15, 30
			320x240	10, 15, 30

ORBBEC. All Rights Reserved. https://www.orbbec.com/

Note: Orbbec reserves the right to change any information in the document without prior notice.

4.5 Depth to Color Alignment

Depth to Color, a pixel-by-pixel geometric transformation of a depth image, results in the spatial alignment of a depth image with its corresponding color image through the D2C transformation, allowing us to locate any pixel of a color image by its image coordinates in the depth image after D2C by the same image coordinates. The depth information of the color pixel can be located in the depth image after D2C by using the same image coordinates. We generate a depth image of the same size as the target color image after D2C, and the image content is the depth data in the color camera coordinate system. In other words, a depth image is reconstructed that is "taken" using the origin and size of the color camera, where each pixel matches the coordinates of the corresponding pixel of the color camera.

Table 4-5-1 Astra Mini Pro/Astra Mini S Pro Depth to Color Alignment

Depth Image before D2C	Color Image	Depth Image After D2C

ORBBEC. All Rights Reserved. https://www.orbbec.com/

Note: Orbbec reserves the right to change any information in the document without prior notice.

4.6 Camera Start Point Reference

The camera start point, or ground zero datum can be described as a start point or plane with depth = 0. For the Astra Mini Pro series 3D camera, the distance of the depth/RGB/LRM zero point relative to the front cover glass of the camera are listed in the table below.

Table 4-6-1 Camera Start Point Illustrations

ORBBEC. All Rights Reserved. https://www.orbbec.com/

Note: Orbbec reserves the right to change any information in the document without prior notice.

5. Performance

5.1 Electrical Performance

5.1.1 Power Supply

The Astra Mini Pro series requires Type-C power and it is important to ensure that the power output is standard and that the maximum current of the Type-C power port is 1.5A or higher.

5.1.2 Power Consumption

Power consumption varies depending on the selected working mode.

Table 5-1-1 Gemini 330series typical configuration & tested power consumption Reference

Name	Astra Mini Pro/Astra Mini S Pro
Typical configuration	Depth：640 x 480 @ 30 fps Y16 RGB: 640 x 480 @ 30 fps YUYV Exp:1049ms，gain:8x D2C: on
Average power consumption	2.1 W

*Note: The data in the above table are laboratory measurements and are for design reference only.

5.1.3 Storage and Powered Conditions

Table 5-1-3 Astra Mini Pro series Storage and Powered Conditions

Condition	Description	Min	Max	Unit
Storage (Ambient), Not Powered	Long term storage	0	60	℃
	Short exposure represents temporary max limits acceptable for transportation conditions	-20	70	℃
	Humidity	Temperature / RH		

ORBBEC. All Rights Reserved. https://www.orbbec.com/

Note: Orbbec reserves the right to change any information in the document without prior notice.

6. Firmware

6.1 Firmware Update & Cautions

Gemini 330series supports update the firmware via online or location, you can upgrade or downgrade as needed. To get the firmware and changelog: **Firmware Release**

Please note the following considerations:

1. You can update the firmware in any working mode or preset;
2. All data streams must be closed when update the firmware;
3. During the firmware update, please ensure that the power supply and data transmission cable connections are stable;
4. The camera will automatically restart after the firmware update is completed. You can also re-plug the cable after completion and restart it manually;

6.2 How to Update Firmware

The simplest way to update the firmware is through the Orbbec Viewer tool, which supports both manual updates and online updates. For detailed instructions, please refer to the documentation: **Update firmware**

6.3 Recovery

Ensure the stability of cable during the update process to avoid upgrade failure. If the update process fails, disconnect the cable, re-insert it, and burn the product again. If re-burning is unsuccessful, the product may be damaged. Orbbec assumes no liability for any damages or losses resulting from the use of this product.

ORBBEC. All Rights Reserved. https://www.orbbec.com/

Note: Orbbec reserves the right to change any information in the document without prior notice.

7. SDK

Orbbec SDK is a flexible and modular platform for easy camera setup and runs on multiple platforms with a rich set of APIs. It supports camera access, device setup and configuration, data stream reading, processing, and viewing, RGB-D registration, and frame synchronization.

Its functions include:

- Access and control of camera devices
- Control of frame synchronization and alignment
- Acquisition of point cloud data
- Orbbec Viewer for camera testing and evaluation

Please visit **Orbbec SDK** for the latest SDK.

7.1 Temperature Sensor and Recording

The temperature of camera core components can be obtained, including laser temperature, IR sensor temperature, and IMU sensor temperature, through API commands.

ORBBEC. All Rights Reserved. https://www.orbbec.com/

Note: Orbbec reserves the right to change any information in the document without prior notice.

8. Use Guidance

8.1 Packing List

Table 8-1-1 Astra Mini Pro series Package List

Package Type	Package List	Astra Mini Pro/Astra Mini S Pro	Notes
Bulk	Camera		Minimum batch packaging quantity: 200pcs

8.2 Initialization and Operation

- Connect Astra Mini Pro/Astra Mini S Pro via the USB cable to the host PC
- Download Orbbec SDK from **Orbbec SDK**
- Use Orbbec Viewer to validate that images can be streamed from all sensors with the following settings:
  - Depth stream: 640 x 480(default configuration)
  - Color stream: 640 x 480(default configuration)
- If for any reason that the camera is not responding or not being detected, please unplug all cables from the camera and replug the cable into the host PC for resetting the camera state.

ORBBEC. All Rights Reserved. https://www.orbbec.com/

Note: Orbbec reserves the right to change any information in the document without prior notice.

9. Regulatory Compliance

These products are certified as follows:

9.1 Laser Safety certification

Class 1 Laser Product under the EN/IEC 60825-1:2014	U.S. FDA Accession Number: 2420619-000
CLASS 1 LASER PRODUCT	FDA

9.2 EMC Regulatory Compliance

CE-Declaration	FCC part 15 Declaration of Conformity	KC
CE	FC	KC

9.3 Environment Regulatory Compliance

RoHS 2.0, REACH, WEEE, TSCA, TPCH, 94/62/EC

RoHS	REACH
RoHS COMPLIANT	REACH compliant

ORBBEC. All Rights Reserved. https://www.orbbec.com/

Note: Orbbec reserves the right to change any information in the document without prior notice.

10. System Integration Guide

Use outside of the specified conditions could cause the device to fail and/or function incorrectly. These conditions are applicable for the environment immediately around the device under all operational conditions. When used with an external enclosure, active temperature control and/or other cooling solutions are recommended to ensure the device is maintained within these ranges.

10.1 Installation Recommendations

Installation Option 1: Assembly from rear side

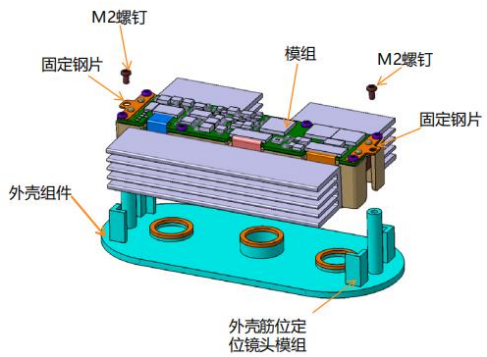

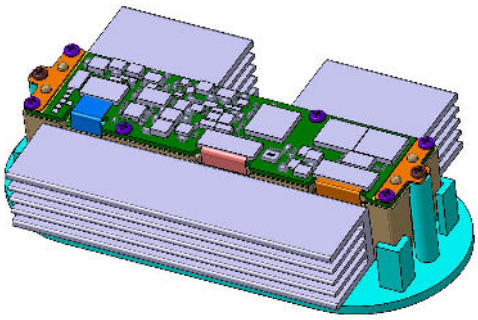

Note:

1. Add a fixing steel bracket to bridge the module, enabling a flexible connection.
2. Install the cable first, then attach the heat sink fins, and use M2 screws to secure the module to the enclosure assembly.
3. Minimize external forces applied to the module from all directions as much as possible to prevent deformation that could affect accuracy.

ORBBEC. All Rights Reserved. https://www.orbbec.com/

Note: Orbbec reserves the right to change any information in the document without prior notice.

Installation Option 2: Assembly from Front

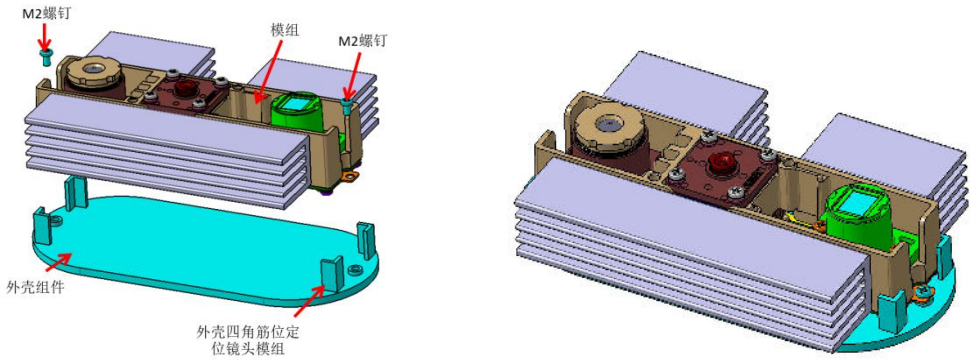

Note:

1. Add a fixing steel bracket to bridge the module for flexible connection.
2. Install the cable first, then attach the heat sink fins, and secure the module to the housing assembly using M2 screws.
3. Minimize external forces applied to the module from all directions as much as possible to avoid deformation that may affect accuracy.

10.2 Heat Dissipation

Option 1: For long-duration operation scenarios, active cooling with fans is recommended, with the module positioned at the air inlet;

Option 2: For stationary scenarios, heat sink fins can be added on both sides of the module bracket, with thermal silicone pads connecting the chips on the back of the mainboard to the heat dissipation metal;

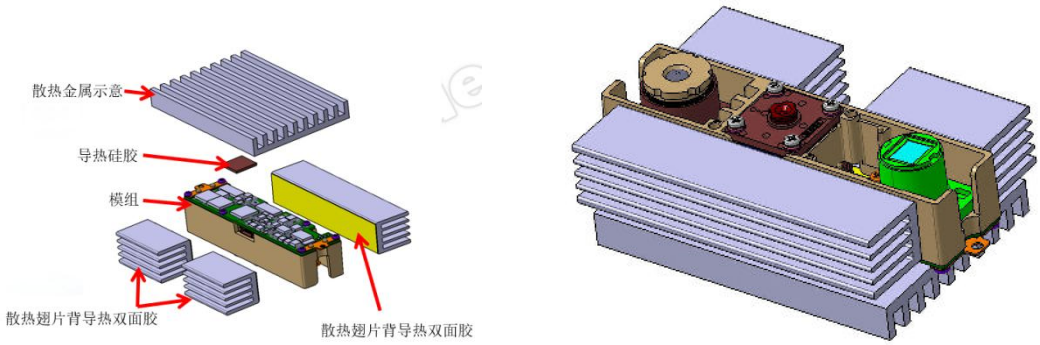

ORBBEC. All Rights Reserved. https://www.orbbec.com/

Note: Orbbec reserves the right to change any information in the document without prior notice.

Option 3: For moving scenarios, replace the heat sink fins in Option 2 with thermal copper foil (0.1mm or thicker), connecting the module bracket to the heat dissipation metal on the back. Note that in this option, the module should first be positioned and fixed to the back heat dissipation metal, which is then positioned and installed to the front housing assembly.

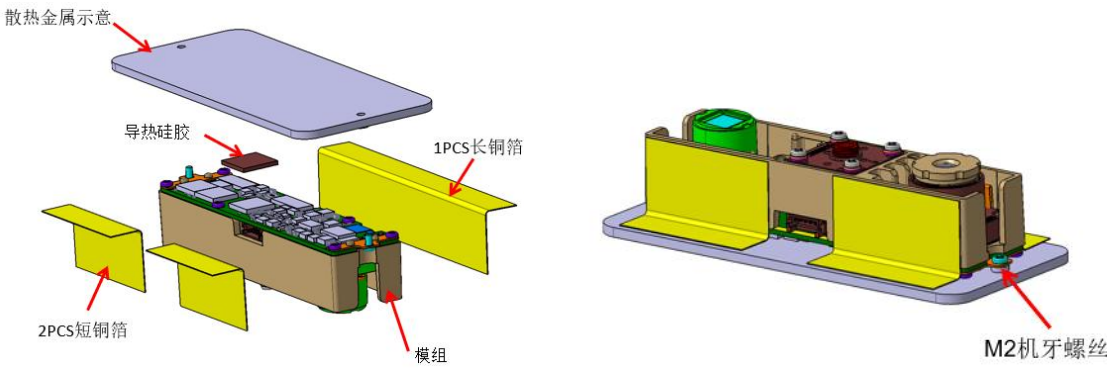

Note: Do not allow the depth camera to be heated by other heat sources.

10.3 Cover Glass Requirements

1. Material:
   - Optical glass, T≤1.0mm, recommended high-aluminum silicon material;
   - Acrylic, T≤1.5mm, surface hardness ≥3H.
2. Process:
   - Full Transmission: The silk-screen opening area should be fully transparent, other areas should be printed with black ink, recommended: Pantone Black 6C;
   - Semi-Transparent: The silk-screen opening area should be semi-transparent, typically printed with IR ink and then coated with AR coating, other areas printed with black ink, recommended: Pantone Black 6C;
   - Note: The difference between full transmission and semi-transparent is whether the silk-screen opening area is semi-transparent. Full transmission is generally common and recommended. For appearance requirements,

ORBBEC. All Rights Reserved. https://www.orbbec.com/

Note: Orbbec reserves the right to change any information in the document without prior notice.

semi-transparent treatment can be considered, but it will reduce transmittance and require additional AR coating, increasing cost. RGB area should not be printed with IR ink as it will affect RGB transmittance at 550nm.

3. Parameters:
   - LDM/IR Transmittance: 855±20nm, ≥92%;
   - RGB Transmittance: 395nm~639nm, ≥92%.

10.3 Cable Design Guide

For detailed cable design guidelines and reference solutions, please see Appendix B.

ORBBEC. All Rights Reserved. https://www.orbbec.com/

Note: Orbbec reserves the right to change any information in the document without prior notice.

11. Cautions

1. Follow the instructions carefully when operating the camera. Improper handling may lead to damage to the internal components.
2. Do not drop the camera or expose the camera to mechanical stress.
3. Do not attempt to modify the camera as such modifications may cause permanent damage or performance degradation.
4. The temperature of the camera may rise during long periods of use.
5. Do not touch the lens. Fingerprints on the lens may affect image quality.
6. Keep the product beyond the reach of children or animals to avoid accidents.
7. If the computer does not recognize the camera, verify that the cable meets the power and data transfer requirements, then replug it into the USB port to reconnect.
8. This product is classified as a Class 1 Laser Product under the international standard EN/IEC 60825-1, Edition 3 (2014). Using controls, adjustments, or procedures other than those specified herein may result in hazardous radiation exposure.

Safety and Handling Instructions:

- Avoid powering on the product if any external damage was observed.
- Do not attempt to open any portion of this product. There are no user serviceable parts.
- Be cautious of invisible laser radiation. Avoid direct exposure to the beam.
- To maintain compliance and safety standards, do not modify or service the product. Unauthorized modifications or servicing could result in emissions surpassing the Class 1 safety level.
- Only update the camera firmware with official releases that match the specific module SKU and revision to ensure proper functionality and safety.

ORBBEC. All Rights Reserved. https://www.orbbec.com/

Note: Orbbec reserves the right to change any information in the document without prior notice.

Appendix A Camera 2D Structural Drawings

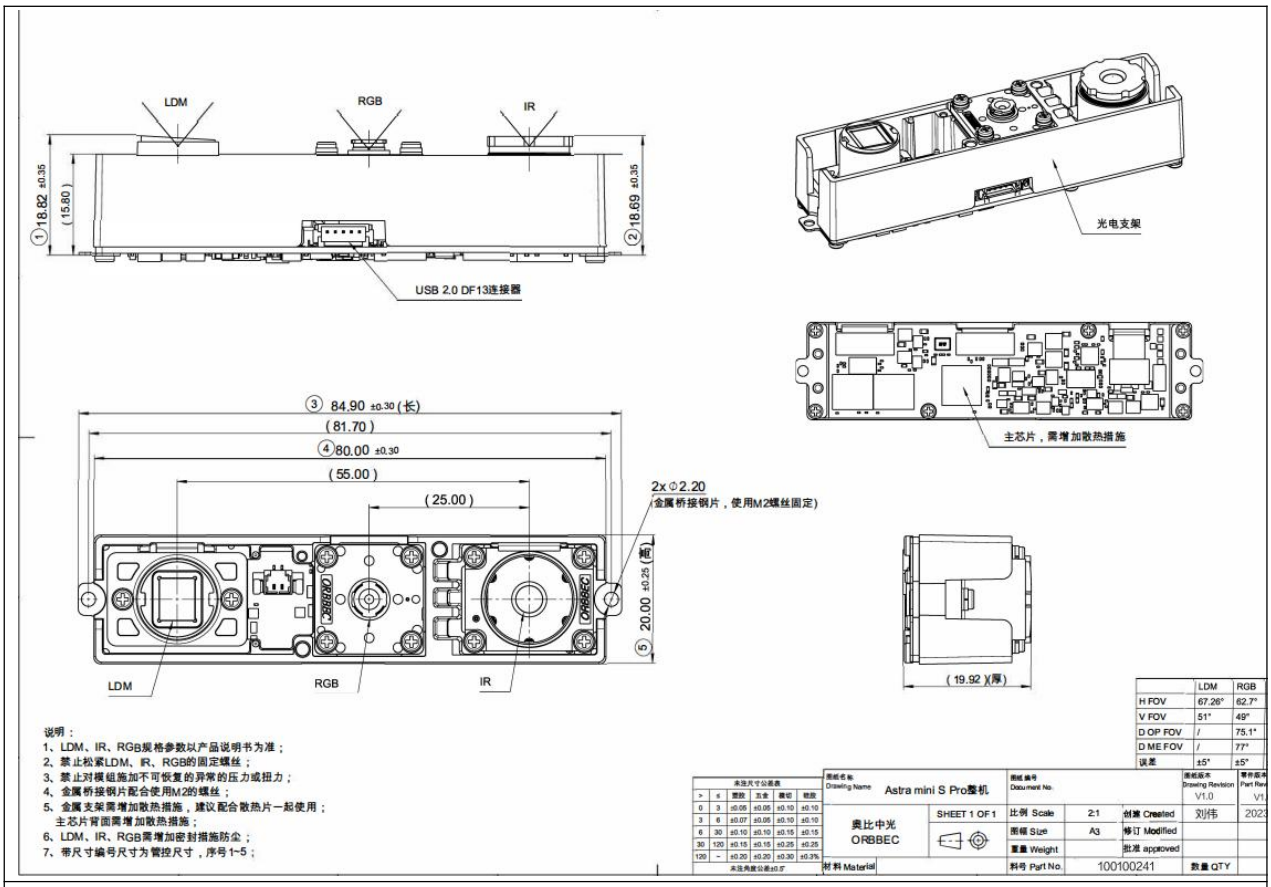

Get 3D drawing files:

Product	Download
Astra Mini Pro	Astra Mini Pro CAD files
Astra Mini S Pro	Astra Mini S Pro CAD files

ORBBEC. All Rights Reserved. https://www.orbbec.com/

Note: Orbbec reserves the right to change any information in the document without prior notice.

Appendix B Cable Design Reference Drawings

MODEL	Astra Mini Pro Series USB Cable(USB_A+DF13)

USB_A

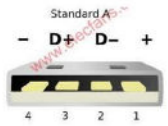

DF13 PLUG

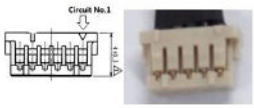

Note:
1.The outer diameter of the cable is 4 mm ± 0.5 mm.
2.The cable color is black.
3.Shielding material: tinned copper braid 80 × 0.1 mm + 15 mm reverse-wrapped aluminum foil, with a shielding coverage of 92%.
4.The DM/DP differential pair must be twisted, with a twist pitch of 10 mm and an impedance of 90 Ω ± 10%.

USB_A PLUG			DF13 PLUG		
POSITION	NAME	DESCRIPTION	POSITION	NAME	DESCRIPTION
1	VDD(AWG28#)	VBUS 5V	5	VDD(AWG28#)	VBUS 5V
2	DM(AWG28#)	Data-	4	DM(AWG28#)	Data-
3	DP(AWG28#)	Data+	3	DP(AWG28#)	Data+
4	GND(AWG28#)	Ground	2	GND(AWG28#)	Ground
Metal shell	Weave(80*0.1mm)	Shielding layer	1	Weave(80*0.1mm)	Shielding layer

Assembly

Note: Reference design drawings are general reference designs from ORBBEC.

ORBBEC. All Rights Reserved. https://www.orbbec.com/

Note: Orbbec reserves the right to change any information in the document without prior notice.

ORBBEC. All Rights Reserved. https://www.orbbec.com/

Note: Orbbec reserves the right to change any information in the document without prior notice.