ORBBEC

Gemini 330 Series

Datasheet v1.1

Copyright Orbbec Inc. All rights reserved. The product described may contain defects or errors or deviations from the published specifications. Contact your sales representative to obtain the latest Orbbec product specifications. Orbbec is not responsible for any users infringing on third party copyright or other rights in the use of Orbbec products. In addition, Orbbec does not assume any liability for damages or any losses resulting from the use of this product. All information provided here is subject to change without notice.

1. Product Brief

Integrating Orbbec's latest custom ASIC, the Gemini 330 series of Depth + RGB cameras combine active and passive stereo vision technologies for seamless operation in both indoor and outdoor conditions. The depth image computation and the depth to color spatial alignment functions are processed inside the camera providing for minimal latency and reduced dependency on expensive and power-hungry external compute. The cameras are programmable for a variety of depth operating modes to adapt to different application scenarios. A flexible and rich frame synchronization mechanism makes multi-camera operations simple and scalable.

The Gemini 330 series is easy to set up and operate with the Orbbec SDK, and the camera delivers extremely accurate and reliable data in various lighting conditions, ranging from pitch black to full sunshine.

- Wide field of view at 90° horizontal and 65° vertical
- High quality depth data output in both indoor and outdoor environments
- Up to 30 fps at 1280 x 800 depth resolution
- USB Type-C for power and data connectivity
- Multi-camera synchronization and IMU supported

ORBBEC. All Rights Reserved. https://www.orbbec.com/

Note: Orbbec reserves the right to change any information in the document without prior notice.

2. Product Specifications

Parameter	Gemini 335/336	Gemini 335L/336L
Model	G40155-170 / G40155-180	G40055-170 / G40055-180
PID	0x0800 / 0x0803	0x0804 / 0x0807
VID	0x2BC5	
Technology	Stereo	
Depth Filter	All-Pass / IR-Pass	Visible+NIR-Pass / IR-Pass
Sensor Type	IR: Global Shutter Color: Rolling Shutter	IR: Global Shutter Color: Global Shutter
Projector Wavelength	850nm	
Baseline	50mm	95mm
IMU	6 DoF; Gyroscope/Accelerometer Frequency Range: 50 - 1,000Hz	
Mirror Mode	Supported, non-mirror by default	
Processing	Internal processing using Orbbec MX6800 ASIC	
Data Connection	USB 3.0 & USB 2.0 Type-C for data and power	
HDR Depth	Supported	
Power Consumption	Average < 3.0W (Peak 6.5W)	Average < 3.0W (Peak 6.5W)
Operating Environment	-10℃ - 45℃ @ 15 fps, -10℃ -40℃ @ 30/60 fps, 5% ~ 90% RH (non-condensing), Indoor/Outdoor	-10℃ - 50℃ @ 15/30 fps, -10℃ -45℃ @ 60 fps, 5% ~ 90 % RH (non-condensing), Indoor/Outdoor
Storage Environment	Short Term: -20℃ - 70℃; Long Term: 0℃ - 60℃, 5%~90 % RH (non-condensing)	
Operating Case Back Temperature	-10℃ - 55℃	-10℃ - 60℃
Protection	IP5X	IP65
Supported Functions	Depth to Color Spatial Alignment, Hardware Timestamps, Multi-camera Sync	
Dimensions	90mm x 25mm x 30 mm / 90mm x 25mm x 30.7mm	124mm x 29mm x 27mm / 124mm x 29mm x 27.7mm
Weight	97g / 99g	133g / 135g
Installation	1x 1/4-20 UNC, Max Torque: 4.0 N.m 2x M3,Max Torque:0.4 N.m	1x 1/4-20 UNC, Max Torque: 4.0 N.m 2x M4,Max Torque: 0.4 N.m
Lifespan	5 Years: Default Operating Mode & Operating Environment	5 Years: Default Operating Mode & Operating Environment

ORBBEC. All Rights Reserved. https://www.orbbec.com/

Note: Orbbec reserves the right to change any information in the document without prior notice.

Gemini 335/336 Data Streams

Depth	Resolution	FOV	FPS	Range	Minimum Depth Distance (Min-Z)	Format
16:10	1280 x 800	H 90° V 65°	6, 15, 30	0.10 – 20m+ Optimal Range: 0.26 – 3m	0.26 m @ 1280 x 800/ 1280 x 720/640 x400 0.18 m @ 848 x 480/ 848 x100 0.17 m @ 640 x 480 0.14 m @ 640 x 360 0.11 m @ 480 x 270 0.10 m @ 424 x 240	Y16
	640 x 400		6, 15, 30			
16:9	1280 x 720	H 90° V 60°	6, 15, 30			
	848 x 480		6, 15, 30,60			
	640 x 360		6, 15, 30,60			
	480 x 270		6, 15, 30,60			
	424 x 240		6, 15, 30,60			
4:3	640 x 480	H 81° V 65°	6, 15, 30,60			
Other	848 x 100	H 90° V 14°	100			

*Depth Accuracy: ±2% (1280 x 800 @ 2m & 81% ROI):
In these defined areas on the depth map, the median depth value of all points (excluding zero depth points and outliers) is calculated, and the average of N median depth values is taken. Z-Accuracy, expressed as a percentage, is calculated as the average median value divided by the true value, multiplied by 100, representing the absolute accuracy of the region.
*Spatial Precision: ≤ 1.5% (1280 x 800 @ 2m & 81% ROI):
Fit a plane to all valid points within the computed area (excluding zero, invalid, and the smallest 0.5% of depths), and calculate the root mean square of the difference between the original depth values of the valid points (measured_z, i.e., the tested depth) and the fitted depth values (fitted_z).
*Fill Rate: >99% (1280 x 800 @ 2m & 81% ROI).
*Temporal Precision:≤ 0.9% (1280 x 800 @ 2m & 81% ROI):
Per-pixel temporal noise is defined by measuring the STD of depth values for each pixel across N consecutive frames, resulting in a STD matrix. Temporal Noise is defined as the median of the STD matrix as a percentage of the target distance Z. This metric excludes NaN and zero depth data.
*Theoretical maximum depth range up to 65 meters.

The actual working range and accuracy may vary with the ambient illumination and the objects being measured.
The test object is a reflectivity > 80% plane, and the reference range is 81% FOV (81% FOV is the remaining center 81% of the depth map area after cropping 5% of the top and bottom of the depth map) or 64% FOV (64% = 80% x 80% and of a similar definition).
The depth performance of each 3D camera is validated at the production line before shipping to customers. The metrics reflect the depth performance under typical conditions. External impact factors over 3D cameras' whole lifespan may have significant impacts on their depth performance.

ORBBEC. All Rights Reserved. https://www.orbbec.com/

Note: Orbbec reserves the right to change any information in the document without prior notice.

IR	Resolution	FOV	FPS	Format
16:10	1280 x 800	H 94° V 68°	6, 15, 30	Y8
	640 x 400		6, 15, 30	
16:9	1280 x 720	H 91° V 60°	6, 15, 30	
	848 x 480		6, 15, 30, 60	
	640 x 360		6, 15, 30, 60	
	480 x 270		6, 15, 30, 60	
	424 x 240		6, 15, 30, 60	
4:3	640 x 480	H 81° V 65°	6, 15, 30, 60	
Other	848 x 100	H 91° V 14°	100	

RGB	Resolution	FOV	FPS	Format
16:9	1920 x 1080	H 86° V 55°	6, 15, 30	MJPEG YUYV (16-bit)
	1280 x 720		6, 15, 30, 60	
	960 x 540		6, 15, 30, 60	
	848 x 480		6, 15, 30, 60	
	640 x 360		6, 15, 30, 60	
	424 x 240		6, 15, 30, 60	
	320 x 180		6, 30, 60	
4:3	640 x 480	H 70° V 55°	6, 15, 30, 60	
	320 x 240		6, 30, 60	

ORBBEC. All Rights Reserved. https://www.orbbec.com/

Note: Orbbec reserves the right to change any information in the document without prior notice.

Gemini 335L Data Streams

Depth	Resolution	FOV	FPS	Range	Minimum Depth Distance (Min-Z)	Format
16:10	1280x800	H90° V65°	5, 15, 30	0.17 - 20m+ Optimal Range: 0.5 – 6m	0.50 m @ 1280 x800/ 1280 x 720/640 x 400	Y16
	640x400		5, 15, 30			
16:9	1280x720	H90° V60°	5, 15, 30		0.34 m @ 848 x 480/ 848 x 100	
	848x480		5, 15, 30, 60			
	640x360		5, 15, 30, 60		0.30 m @ 640 x 480	
	480x270		5, 15, 30, 60		0.26 m @ 640 x 360	
	424x240		5, 15, 30, 60		0.19 m @ 480 x 270	
4:3	640x480	H81° V65°	5, 15, 30, 60		0.17 m @ 424 x 240	
Other	848x100	H90° V14°	100			

*Depth Accuracy: ±1% (1280 x 800 @ 2m & 81% ROI), ±2% (1280 x 800 @ 4m & 64% ROI):
In these defined areas on the depth map, the median depth value of all points (excluding zero depth points and outliers) is calculated, and the average of N median depth values is taken. Z-Accuracy, expressed as a percentage, is calculated as the average median value divided by the true value, multiplied by 100, representing the absolute accuracy of the region.
*Spatial Precision: ≤ 0.8% (1280 x 800 @ 2m & 81% ROI), ≤ 1.6% (1280 x 800 @ 4m & 64% ROI):
Fit a plane to all valid points within the computed area (excluding zero, invalid, and the smallest 0.5% of depths), and calculate the root mean square of the difference between the original depth values of the valid points (measured_z, i.e., the tested depth) and the fitted depth values (fitted_z).
*Fill Rate: >99% (1280 x 800 @ 4m & 64% ROI).
*Temporal Precision:≤ 0.4% (1280 x 800 @ 2m & 81% ROI),≤ 0.8% (1280 x 800 @ 4m & 64% ROI):
Per-pixel temporal noise is defined by measuring the STD of depth values for each pixel across N consecutive frames, resulting in a STD matrix. Temporal Noise is defined as the median of the STD matrix as a percentage of the target distance Z. This metric excludes NaN and zero depth data.
*Theoretical maximum depth range up to 65 meters.

The actual working range and accuracy may vary with the ambient illumination and the objects being measured.
The test object is a reflectivity > 80% plane, and the reference range is 81% FOV (81% FOV is the remaining center 81% of the depth map area after cropping 5% of the top and bottom of the depth map) or 64% FOV (64% = 80% x 80% and of a similar definition).
The depth performance of each 3D camera is validated at the production line before shipping to customers. The metrics reflect the depth performance under typical conditions. External impact factors over 3D cameras' whole lifespan may have significant impacts on their depth performance.

ORBBEC. All Rights Reserved. https://www.orbbec.com/

Note: Orbbec reserves the right to change any information in the document without prior notice.

IR	Resolution	FOV	FPS	Format
16:10	1280 x 800	H 94° V 68°	5, 15, 30	Y8
	640 x 400		5, 15, 30	
16:9	1280 x 720	H 91° V 60°	5, 15, 30	
	848 x 480		5, 15, 30, 60	
	640 x 360		5, 15, 30, 60	
	480 x 270		5, 15, 30, 60	
	424 x 240		5, 15, 30, 60	
4:3	640 x 480	H 81° V 65°	5, 15, 30, 60	
Other	848 x 100	H 91° V 14°	100	

RGB	Resolution	FOV	FPS	Format
16:10	1280 x 800	H 94° V 68°	5, 15, 30, 60	MJPEG YUYV (16-bit)
	640 x 400		5, 15, 30, 60	
16:9	1280 x 720	H 94° V 62°	5, 15, 30, 60	
	848 x 480		5, 15, 30, 60	
	640 x 360		5, 15, 30, 60	
	480 x 270		5, 15, 30, 60	
	424 x 240		5, 15, 30, 60	
4:3	640 x 480	H 82° V 66°	5, 15, 30, 60	

ORBBEC. All Rights Reserved. https://www.orbbec.com/

Note: Orbbec reserves the right to change any information in the document without prior notice.

Gemini 336L Data Streams

Depth	Resolution	FOV	FPS	Range	Minimum Depth Distance (Min-Z)	Format
16:10	1280x800	H90° V65°	5, 15, 30	0.1 - 20m+ Optimal Range: 0.25 – 6m	**Default:** 0.50 m @ 1280 x800/ 1280 x 720/640 x 400 0.34 m @ 848 x 480/ 848 x 100 0.30 m @ 640 x 480 0.26 m @ 640 x 360 0.19 m @ 480 x 270 0.17 m @ 424 x 240 **AMR With IR-Pass:** 0.25 m @ 1280 x800/ 1280 x 720/640 x 400 0.17 m @ 848 x 480/ 848 x 100 0.15 m @ 640 x 480 0.13 m @ 640 x 360 0.10 m @ 480 x 270 0.10 m @ 424 x 240	Y16
	640x400		5, 15, 30			
16:9	1280x720	H90° V60°	5, 15, 30			
	848x480		5, 15, 30, 60			
	640x360		5, 15, 30, 60			
	480x270		5, 15, 30, 60			
	424x240		5, 15, 30, 60			
4:3	640x480	H81° V65°	5, 15, 30, 60			
Other	848x100	H90° V14°	100			

*Depth Accuracy: ±1% (1280 x 800 @ 2m & 81% ROI), ±2% (1280 x 800 @ 4m & 64% ROI):
In these defined areas on the depth map, the median depth value of all points (excluding zero depth points and outliers) is calculated, and the average of N median depth values is taken. Z-Accuracy, expressed as a percentage, is calculated as the average median value divided by the true value, multiplied by 100, representing the absolute accuracy of the region.
*Spatial Precision: ≤ 0.8% (1280 x 800 @ 2m & 81% ROI), ≤ 1.6% (1280 x 800 @ 4m & 64% ROI):
Fit a plane to all valid points within the computed area (excluding zero, invalid, and the smallest 0.5% of depths), and calculate the root mean square of the difference between the original depth values of the valid points (measured_z, i.e., the tested depth) and the fitted depth values (fitted_z).
*Fill Rate: >99% (1280 x 800 @ 4m & 64% ROI).
*Temporal Precision:≤ 0.4% (1280 x 800 @ 2m & 81% ROI),≤ 0.8% (1280 x 800 @ 4m & 64% ROI):
Per-pixel temporal noise is defined by measuring the STD of depth values for each pixel across N consecutive frames, resulting in a STD matrix. Temporal Noise is defined as the median of the STD matrix as a percentage of the target distance Z. This metric excludes NaN and zero depth data.
*Theoretical maximum depth range up to 65 meters.

The actual working range and accuracy may vary with the ambient illumination and the objects being measured.
The test object is a reflectivity > 80% plane, and the reference range is 81% FOV (81% FOV is the remaining center 81% of the depth map area after cropping 5% of the top and bottom of the depth map) or 64% FOV (64% = 80% x 80% and of a similar definition).
The depth performance of each 3D camera is validated at the production line before shipping to customers. The metrics reflect the depth performance under typical conditions. External impact factors over 3D cameras' whole lifespan may have significant impacts on their depth performance.

ORBBEC. All Rights Reserved. https://www.orbbec.com/

Note: Orbbec reserves the right to change any information in the document without prior notice.

IR	Resolution	FOV	FPS	Format
16:10	1280 x 800	H 94° V 68°	5, 15, 30	Y8
	640 x 400		5, 15, 30	
16:9	1280 x 720	H 91° V 60°	5, 15, 30	
	848 x 480		5, 15, 30, 60	
	640 x 360		5, 15, 30, 60	
	480 x 270		5, 15, 30, 60	
	424 x 240		5, 15, 30, 60	
4:3	640 x 480	H 81° V 65°	5, 15, 30, 60	
Other	848 x 100	H 91° V 14°	100	

RGB	Resolution	FOV	FPS	Format
16:10	1280 x 800	H 94° V 68°	5, 15, 30, 60	MJPEG YUYV (16-bit)
	640 x 400		5, 15, 30, 60	
16:9	1280 x 720	H 94° V 62°	5, 15, 30, 60	
	848 x 480		5, 15, 30, 60	
	640 x 360		5, 15, 30, 60	
	480 x 270		5, 15, 30, 60	
	424 x 240		5, 15, 30, 60	
4:3	640 x 480	H 82° V 66°	5, 15, 30, 60	

ORBBEC. All Rights Reserved. https://www.orbbec.com/

Note: Orbbec reserves the right to change any information in the document without prior notice.

Image Data Streams

The Gemini 330 series provides high-quality, multi-resolution depth stream data, as well as high-definition color stream data. The camera outputs depth stream data in Y16 format. The color stream data output by the camera is in MJPEG/YUYV format. The SDK supports output in MJPEG / YUYV / RGB8 / BGR8 / RGBA8 / BGRA8 / Y16 formats and also supports output in RAW16 format at maximum resolution. The camera outputs IR image data in Y8 format, and the SDK also supports outputting data in Y12 format.

Gemini 335/336(USB 3.0)	Data Format	Resolution	Frame Rate
Depth	Y16	1280 x 800	6, 15, 30
		640 x 400	6, 15, 30
		1280 x 720	6, 15, 30
		848 x 480	6, 15, 30, 60
		848 x 100	100
		640 x 480	6, 15, 30, 60
		640 x 360	6, 15, 30, 60
		480 x 270	6, 15, 30, 60
		424 x 240	6, 15, 30, 60
IR	Y8	1280 x 800	6, 15, 30
		640 x 400	6, 15, 30
		1280 x 720	6, 15, 30
		848 x 480	6, 15, 30, 60
		848 x 100	100
		640 x 480	6, 15, 30, 60
		640 x 360	6, 15, 30, 60
		480 x 270	6, 15, 30, 60
		424 x 240	6, 15, 30, 60
RGB	MJPEG	1920 x 1080	6, 15, 30
		1280 x 720	6, 15, 30, 60
		960 x 540	6, 15, 30, 60
		848 x 480	6, 15, 30, 60
		640 x 480	6, 15, 30, 60
		640 x 360	6, 15, 30, 60
		424 x 240	6, 15, 30, 60
		320 x 240	6, 30, 60
		320 x 180	6, 30, 60
	YUYV	1920 x 1080	6, 15, 30
		1280 x 720	6, 15, 30, 60
		960 x 540	6, 15, 30, 60
		848 x 480	6, 15, 30, 60
		640 x 480	6, 15, 30, 60
		640 x 360	6, 15, 30, 60
		424 x 240	6, 15, 30, 60
		320 x 240	6, 30, 60
		320 x 180	6, 30, 60
*YUYV 1920 x 1080 will be supported with a firmware update later.			

ORBBEC. All Rights Reserved. https://www.orbbec.com/

Note: Orbbec reserves the right to change any information in the document without prior notice.

Gemini 335/336(USB 2.0)	Data Format	Resolution	Frame Rate
Depth	Y16	1280 x 800	6
		1280 x 720	6
		848 x 480	6, 8, 10
		640 x 480	6, 15, 30
		640 x 400	6, 15, 30
		640 x 360	30
		480 x 270	6, 15, 30, 60
IR	Y8	1280 x 720	6
		848 x 480	6, 8, 10
		640 x 480	6, 15, 30
		640 x 360	30
		480 x 270	6, 15, 30, 60
RGB	MJPEG	1920 x 1080	8
		1280 x 720	6, 10, 15
		640 x 480	6, 15, 30
		424 x 240	6, 15, 30, 60
	YUYV	1920 x 1080	8
		1280 x 720	6, 10, 15
		640 x 480	6, 15, 30
		424 x 240	6, 15, 30, 60
*YUYV 1920 x 1080/1280 x 720 will be supported with a firmware update later.			

ORBBEC. All Rights Reserved. https://www.orbbec.com/

Note: Orbbec reserves the right to change any information in the document without prior notice.

Gemini 335L / Gemini 336L (USB 3.0)	Data Format	Resolution	Frame Rate
Depth	Y16	1280 x 800	5, 15, 30
		640 x 400	5, 15, 30
		1280 x 720	5, 15, 30
		848 x 480	5, 15, 30, 60
		848 x 100	100
		640 x 480	5, 15, 30, 60
		640 x 360	5, 15, 30, 60
		480 x 270	5, 15, 30, 60
		424 x 240	5, 15, 30, 60
IR	Y8	1280 x 800	5, 15, 30
		640 x 400	5, 15, 30
		1280 x 720	5, 15, 30
		848 x 480	5, 15, 30, 60
		848 x 100	100
		640 x 480	5, 15, 30, 60
		640 x 360	5, 15, 30, 60
		480 x 270	5, 15, 30, 60
		424 x 240	5, 15, 30, 60
RGB	MJPEG	1280 x 800	5, 10, 15, 30, 60
		1280 x 720	5, 10, 15, 30, 60
		848 x 480	5, 10, 15, 30, 60
		640 x 480	5, 10, 15, 30, 60
		640 x 360	5, 10, 15, 30, 60
		480 x 270	5, 10, 15, 30, 60
		424 x 240	5, 10, 15, 30, 60
	YUYV	1280 x 800	5, 10, 15, 30, 60
		1280 x 720	5, 10, 15, 30, 60
		848 x 480	5, 10, 15, 30, 60
		640 x 480	5, 10, 15, 30, 60
		640 x 360	5, 10, 15, 30, 60
		480 x 270	5, 10, 15, 30, 60
		424 x 240	5, 10, 15, 30, 60
*YUYV 1280 x 800/1280 x 720 will be supported with a firmware update later.			

ORBBEC. All Rights Reserved. https://www.orbbec.com/

Note: Orbbec reserves the right to change any information in the document without prior notice.

Gemini 335L / Gemini 336L (USB 2.0)	Data Format	Resolution	Frame Rate
Depth	Y16	1280 x 800	5
		1280 x 720	5
		848 x 480	5, 10
		640 x 480	5, 15, 30
		640 x 400	5, 15, 30
		640 x 360	30
		480 x 270	5, 15, 30, 60
IR	Y8	1280 x 720	5
		848 x 480	5, 10
		640 x 480	5, 15, 30
		640 x 360	30
		480 x 270	5, 15, 30, 60
RGB	MJPEG	1280 x 800	8
		1280 x 720	5, 10, 15
		640 x 480	5, 10, 15, 30
		424 x 240	5, 10, 15, 30, 60
	YUYV	1280 x 800	8
		1280 x 720	5, 10, 15
		640 x 480	5, 10, 15, 30
		424 x 240	5, 10, 15, 30, 60
*YUYV 1280 x 800/1280 x 720 will be supported with a firmware update later.			

Simultaneous Data Streams

Depth	IR_Left	IR_Right	RGB	IMU
Y16				Gyro & Accelerometer
Y16	Y8			Gyro & Accelerometer
Y16		Y8		Gyro & Accelerometer
Y16	Y8	Y8		Gyro & Accelerometer
Y16	Y8		MJPEG/ YUYV	Gyro & Accelerometer
Y16		Y8	MJPEG/ YUYV	Gyro & Accelerometer
Y16	Y8	Y8	MJPEG/ YUYV	Gyro & Accelerometer
	Y8			Gyro & Accelerometer
	Y8	Y8		Gyro & Accelerometer
	Y8		MJPEG/ YUYV	Gyro & Accelerometer
		Y8		Gyro & Accelerometer
		Y8	MJPEG/ YUYV	Gyro & Accelerometer

ORBBEC. All Rights Reserved. https://www.orbbec.com/

Note: Orbbec reserves the right to change any information in the document without prior notice.

3. Product Information

3.1 Product Pictures

Gemini 335 Product Picture Front View

Gemini 335 Product Picture Rear View

Gemini 336 Product Picture Front View

Gemini 336 Product Picture Rear View

ORBBEC. All Rights Reserved. https://www.orbbec.com/

Note: Orbbec reserves the right to change any information in the document without prior notice.

Gemini 335L Product Picture Front View

Gemini 335L Product Picture Rear View

Gemini 336L Product Picture Front View

Gemini 336L Product Picture Rear View

ORBBEC. All Rights Reserved. https://www.orbbec.com/

Note: Orbbec reserves the right to change any information in the document without prior notice.

3.2 Product Drawings

3.2.1 Product Drawings for Gemini 335

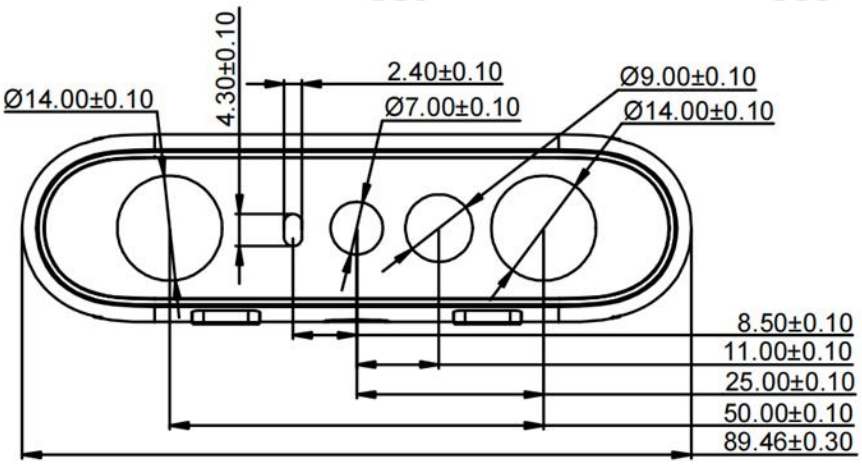

Gemini 335 Product Drawing Front View

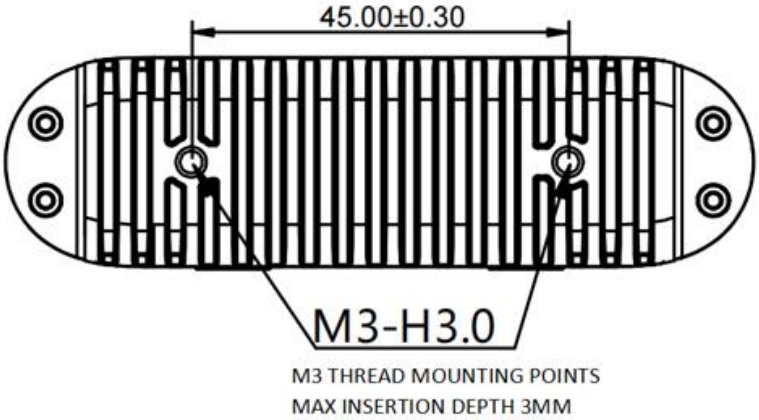

Gemini 335 Product Drawing Rear View

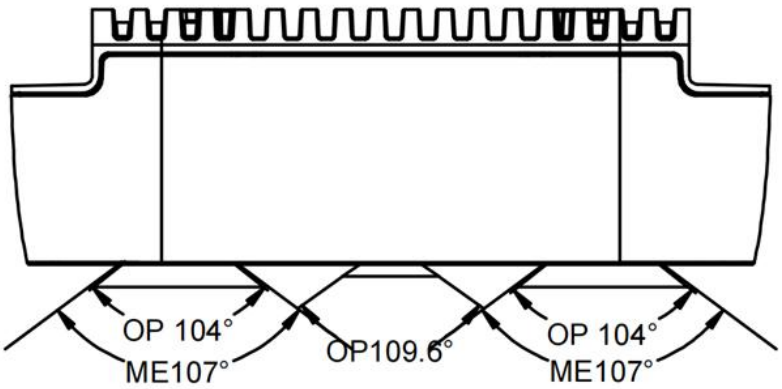

Gemini 335 Product Drawing Top View

ORBBEC. All Rights Reserved. https://www.orbbec.com/

Note: Orbbec reserves the right to change any information in the document without prior notice.

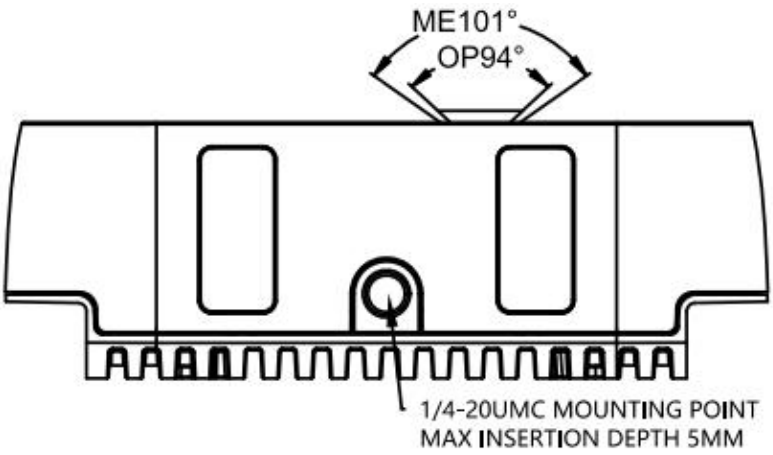

Gemini 335 Product Drawing Bottom View

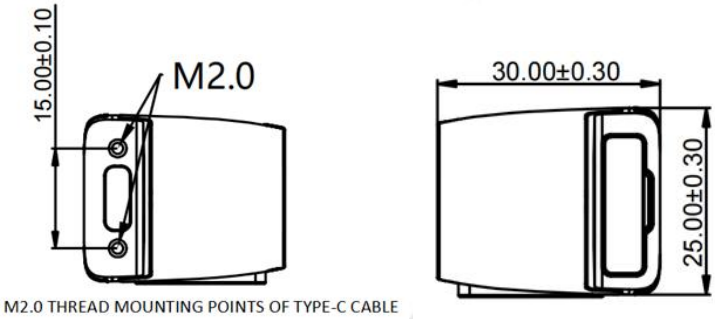

Gemini 335 Product Drawing Side View

3.2.2 Product Drawings for Gemini 336

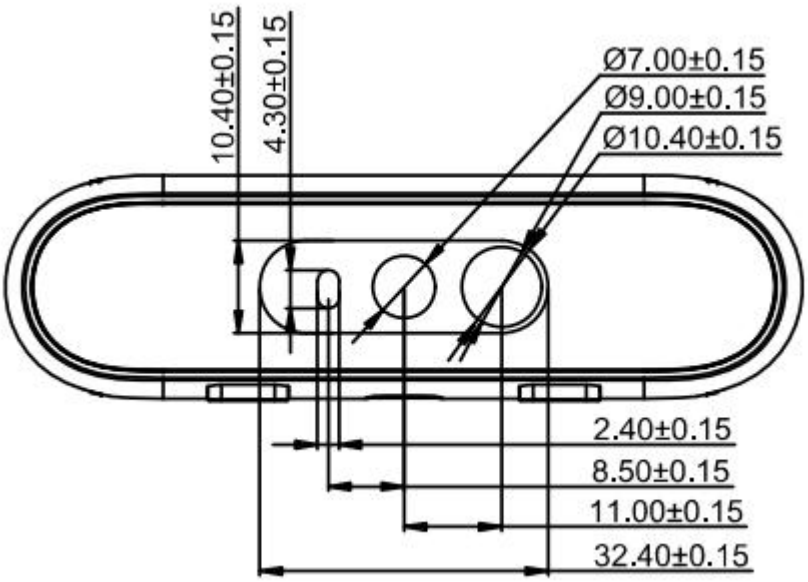

Gemini 336 Product Drawing Front View

ORBBEC. All Rights Reserved. https://www.orbbec.com/

Note: Orbbec reserves the right to change any information in the document without prior notice.

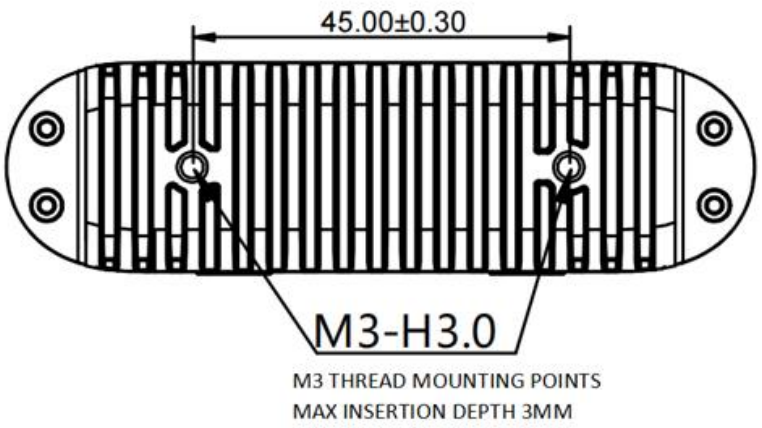

Gemini 336 Product Drawing Rear View

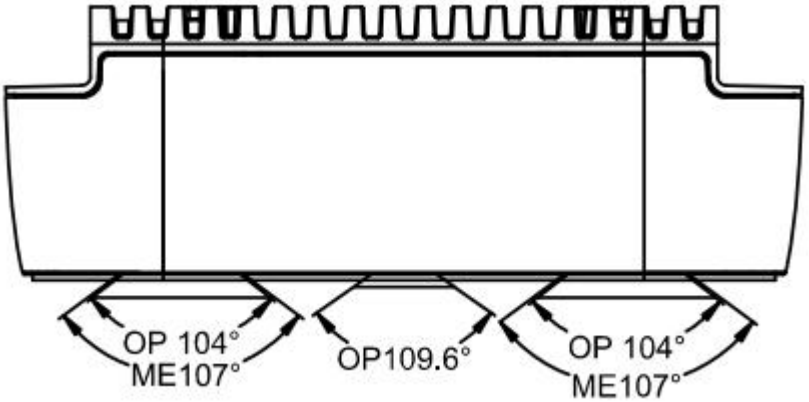

Gemini 336 Product Drawing Top View

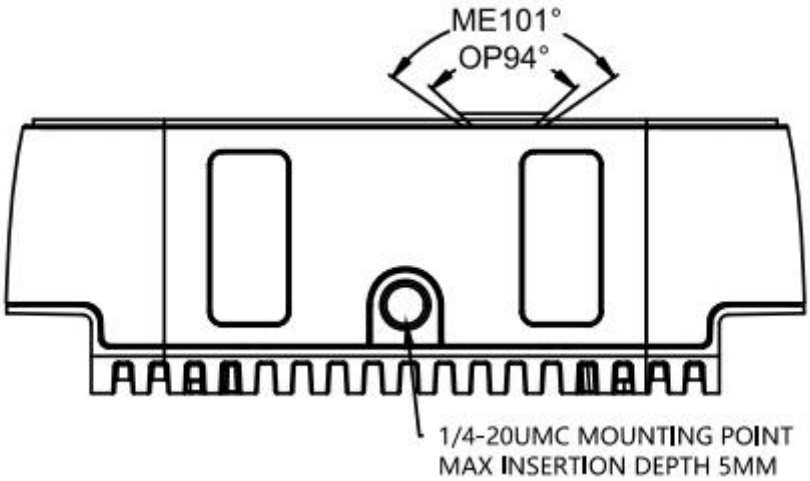

Gemini 336 Product Drawing Bottom View

ORBBEC. All Rights Reserved. https://www.orbbec.com/

Note: Orbbec reserves the right to change any information in the document without prior notice.

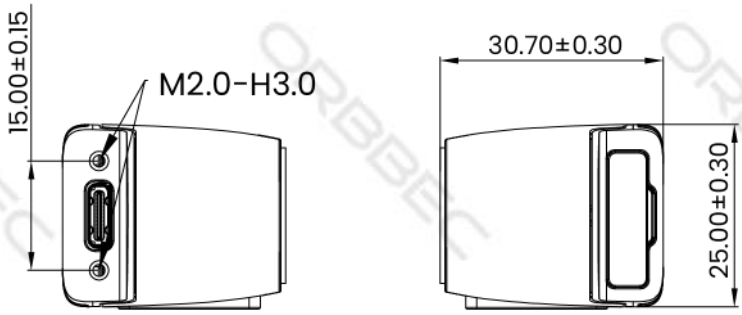

Gemini 336 Product Drawing Side View

3.2.3 Product Drawings for Gemini 335L

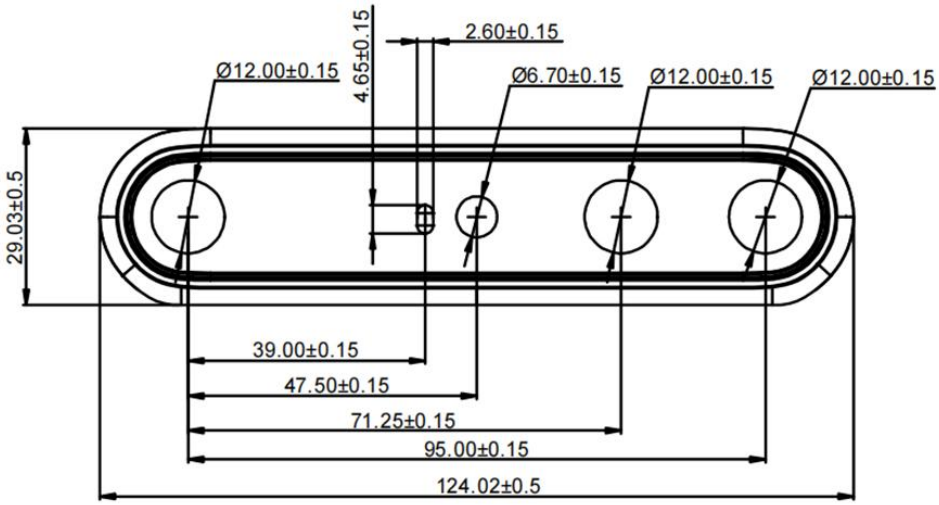

Gemini 335L Product Drawing Front View

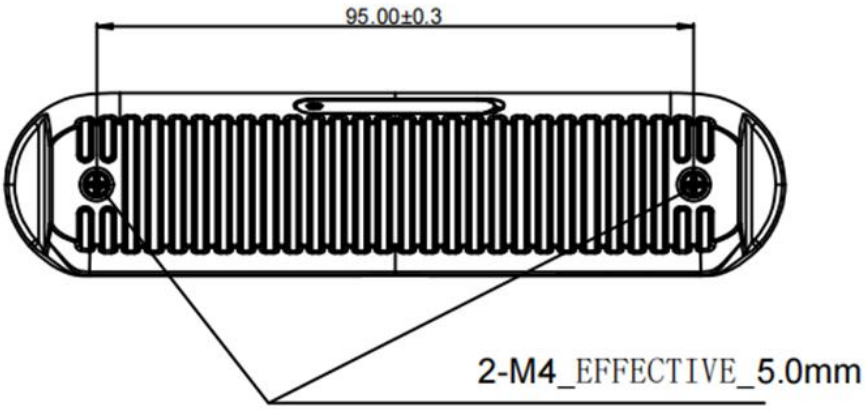

Gemini 335L Product Drawing Rear View

ORBBEC. All Rights Reserved. https://www.orbbec.com/

Note: Orbbec reserves the right to change any information in the document without prior notice.

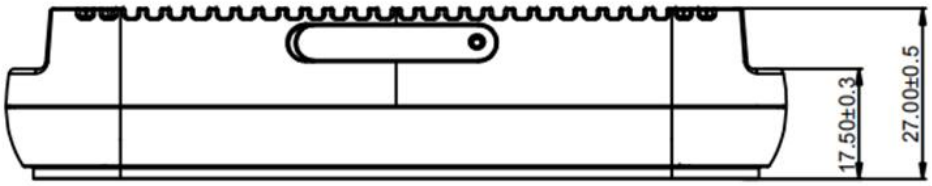

Gemini 335L Product Drawing Top View

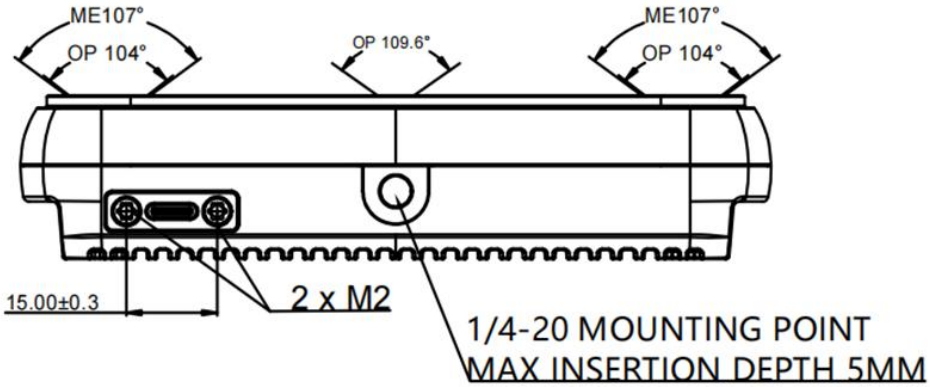

Gemini 335L Product Drawing Bottom View

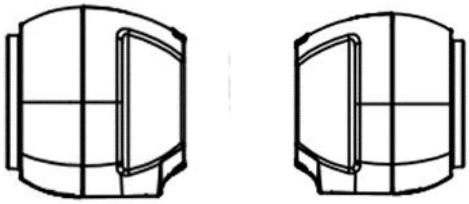

Gemini 335L Product Drawing Side View

3.2.3 Product Drawings for Gemini 336L

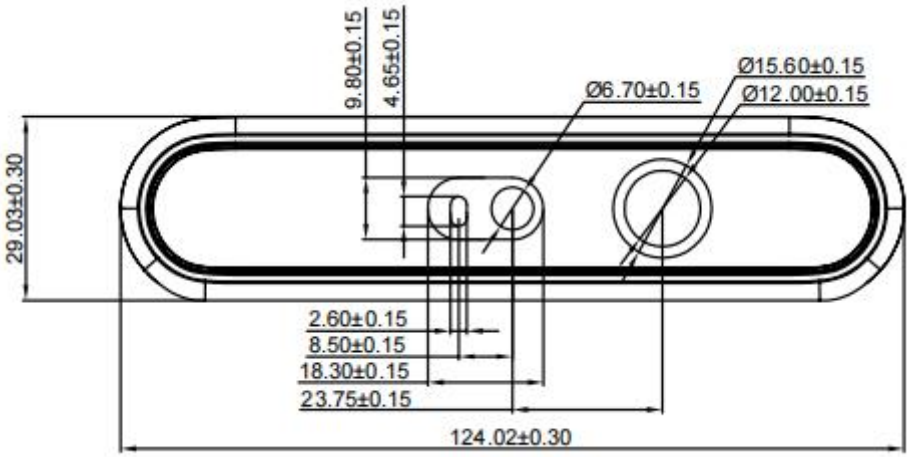

Gemini 336L Product Drawing Front View

ORBBEC. All Rights Reserved. https://www.orbbec.com/

Note: Orbbec reserves the right to change any information in the document without prior notice.

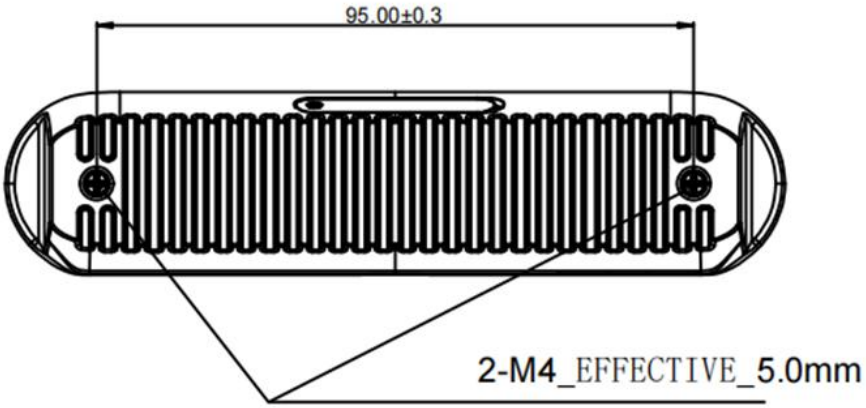

Gemini 336L Product Drawing Rear View

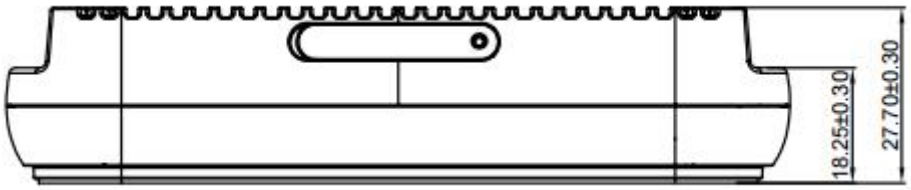

Gemini 336L Product Drawing Top View

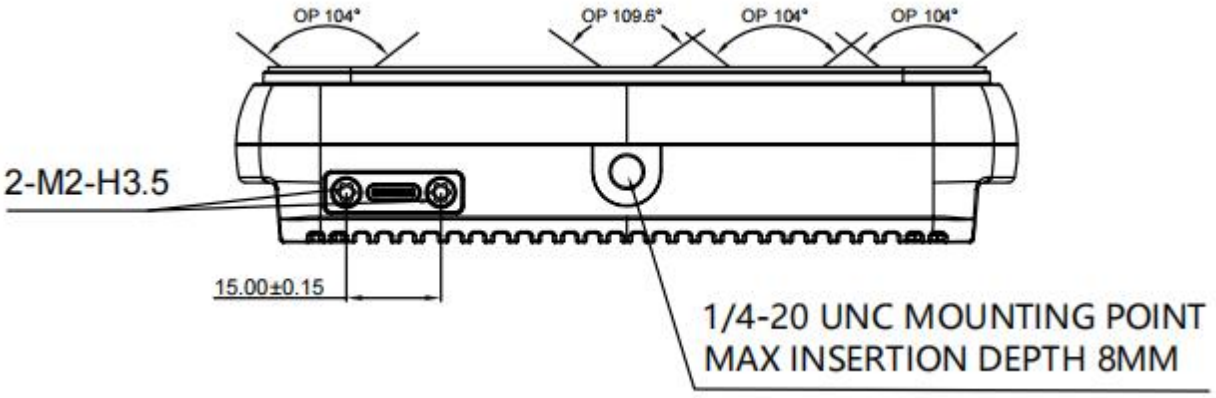

Gemini 336L Product Drawing Bottom View

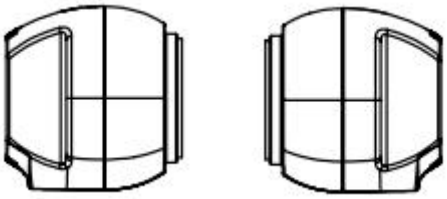

Gemini 336L Product Drawing Side View

ORBBEC. All Rights Reserved. https://www.orbbec.com/

Note: Orbbec reserves the right to change any information in the document without prior notice.

Depth Start Point Reference

The depth start point, or ground zero datum can be described as a start point or plane with depth = 0. For the Gemini 330 series 3D camera, the distance of the depth zero point relative to the front face of the camera are listed in the table below.

Camera	Start Point Position (Z')
Gemini 335	4.230mm
Gemini 336	4.930mm
Gemini 335L	4.080mm
Gemini 336L	4.780mm

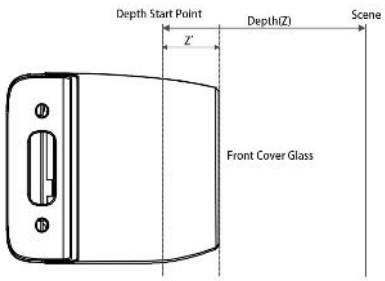

Gemini 335/336 Depth Start Point

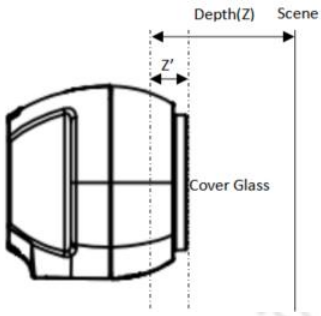

Gemini 335L/336L Depth Start Point

3.3 Product Interfaces

The hardware interfaces of Gemini 335/336 camera are shown in the figure below.

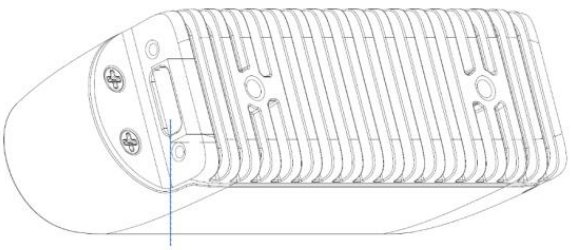

24 Pin USB Type-C

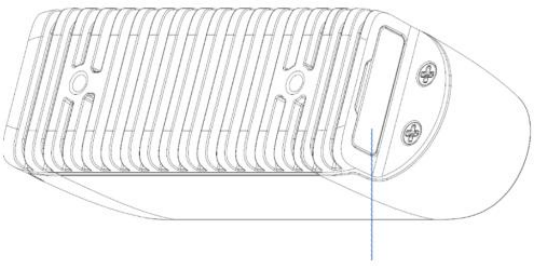

8 Pin Sync Port

The hardware interfaces of Gemini 335L/336L camera are shown in the figure below.

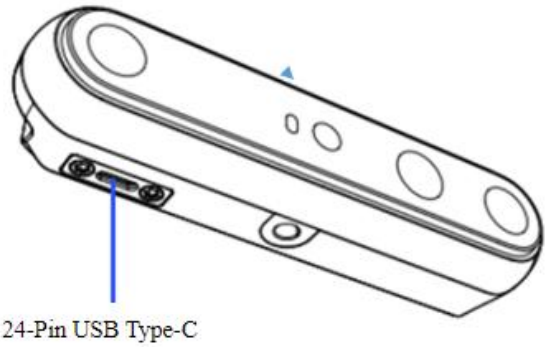

24-Pin USB Type-C

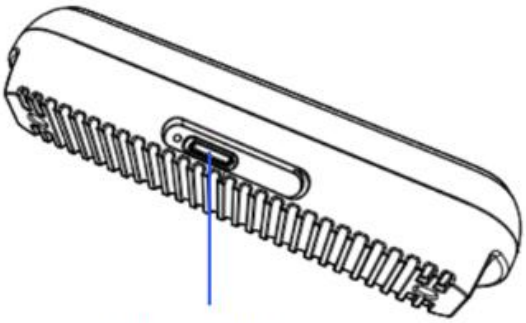

8-Pin Sync Port

ORBBEC. All Rights Reserved. https://www.orbbec.com/

Note: Orbbec reserves the right to change any information in the document without prior notice.

3.4 Product Components

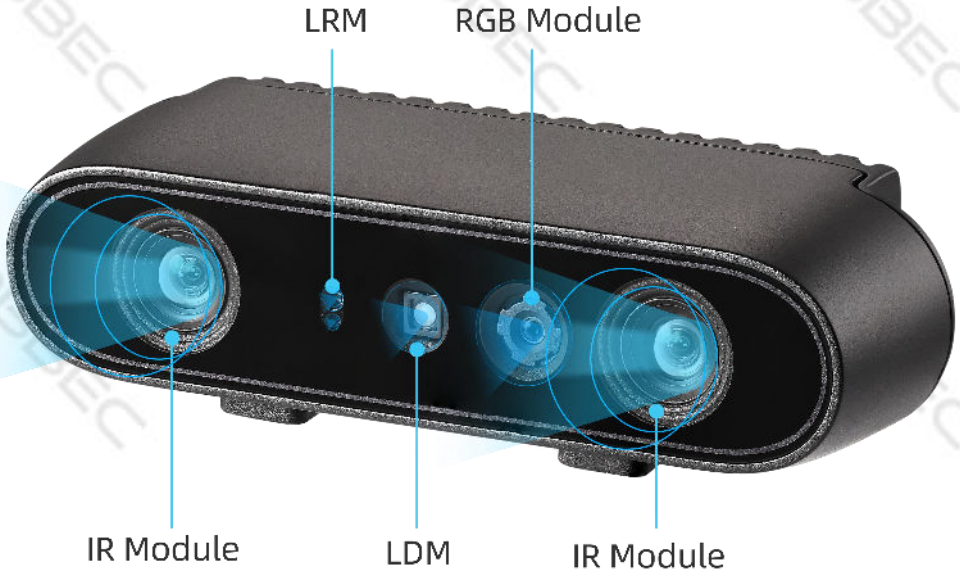

Gemini 335 Components

Gemini 336 Components

ORBBEC. All Rights Reserved. https://www.orbbec.com/

Note: Orbbec reserves the right to change any information in the document without prior notice.

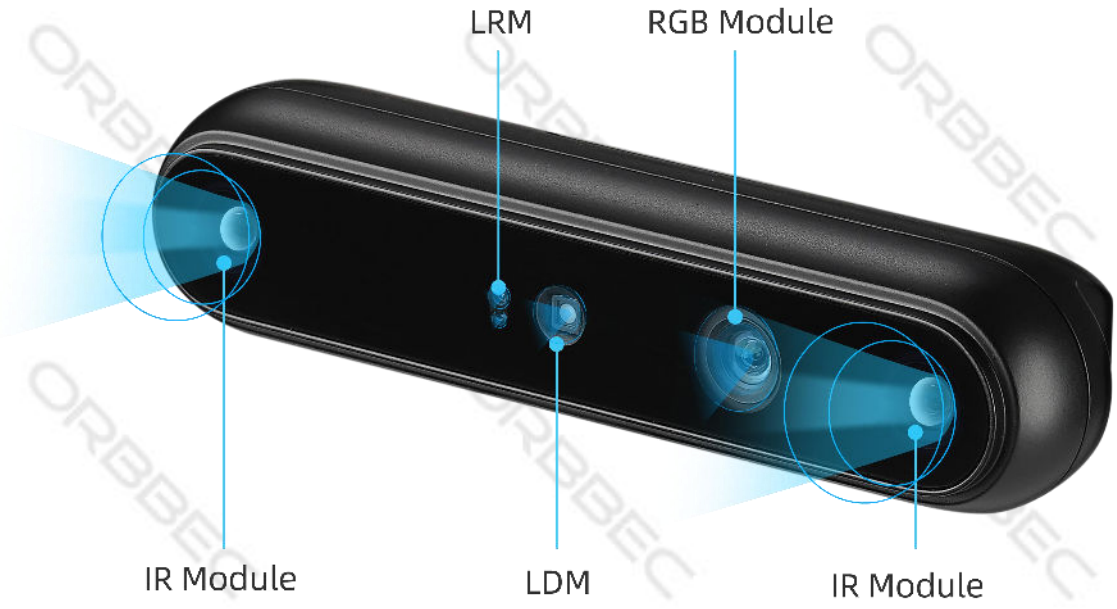

Gemini 335L Components

Gemini 336L Components

ORBBEC. All Rights Reserved. https://www.orbbec.com/

Note: Orbbec reserves the right to change any information in the document without prior notice.

IR Module	Gemini 335 /336/336L	Gemini 335L
Filter Type	All-pass Filter	Visible + NIR-pass Filter
Active Pixels	1280 x 800	1280 x 800
Ratio	16:10	16:10
Focus Type	Fixed	Fixed
Shutter Type	Global Shutter	Global Shutter
Connection Type	MIPI	MIPI
Horizontal FOV	94°	94°
Vertical FOV	68°	68°
Diagonal FOV	104°	104°
FOV tolerance	±3.0°	±3.0°
Distortion	1.5%	1.5%

RGB Module	Gemini 335/336	Gemini 335L/336L
Filter Type	IR-cut	IR-cut
Active Pixels	1920 x 1080	1280 x 800
Ratio	16:9	16:10
Focus Type	Fixed	Fixed
Shutter Type	Rolling Shutter	Global Shutter
Connection Type	MIPI	MIPI
Horizontal FOV	86°	94°
Vertical FOV	55°	68°
Diagonal FOV	94°	104°
FOV tolerance	±3.0°	±3.0°
Distortion	1.5%	1.5%

ORBBEC. All Rights Reserved. https://www.orbbec.com/

Note: Orbbec reserves the right to change any information in the document without prior notice.

Laser Ranging Module

The Gemini 335/336 and 335L/336L 3D cameras come equipped with a LRM (Laser Ranging Module) single-point laser ranging module. Essentially, it is a single-point dToF (direct time-of-flight) sensor that calculates relative distance by measuring the time it takes for light to travel from emission to reception. It is used for close-range ranging, helping the 3D camera to fill in blind spots at short distances and enhances the overall ranging performance of the depth camera.

Gemini 335/336/335L/336L LRM Ranging Accuracy Reference Value

	Distance	Value	Unit
LRM Accuracy	1mm — 100mm	±15	mm
	100mm — 200mm	±10	mm
	200 mm — 400mm	±5%	/

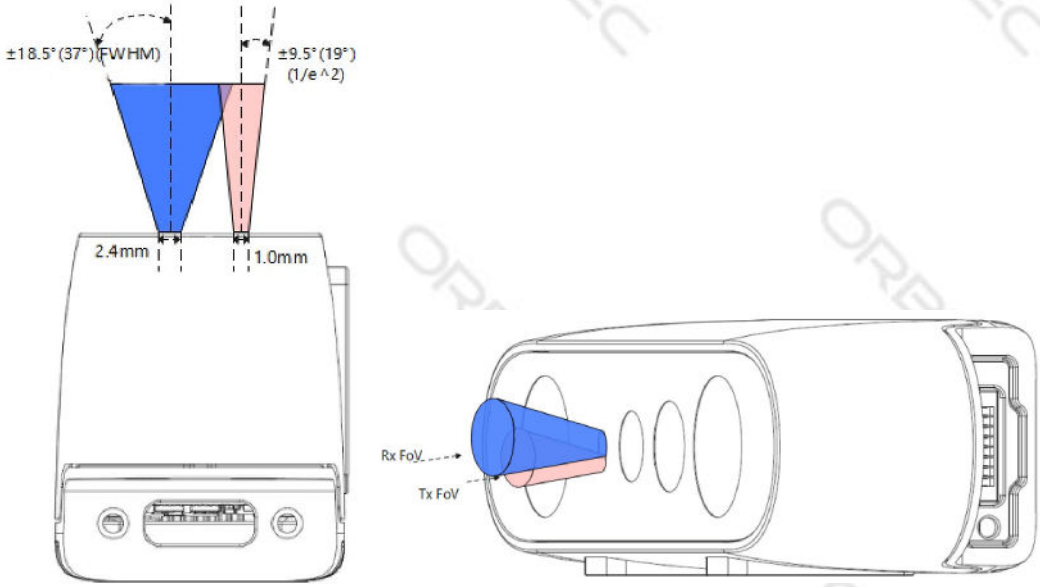

Gemini 335/336 LRM Ranging FOV

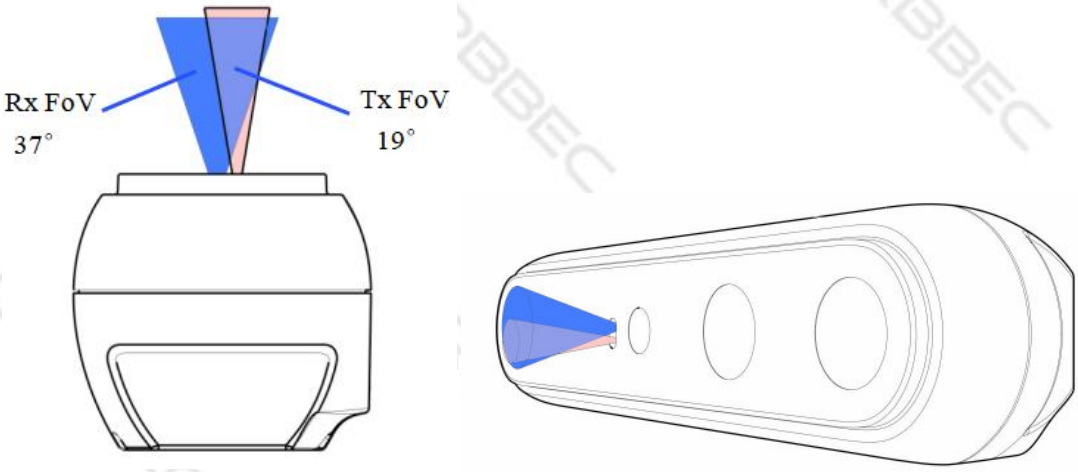

Gemini 335L/336L LRM Ranging FOV

ORBBEC. All Rights Reserved. https://www.orbbec.com/

Note: Orbbec reserves the right to change any information in the document without prior notice.

IMU		Gemini 335/336/335L/336L
Timestamp Unit		us
X/Y/Z Axis		The X, Y, and Z axis point right, downward, and forward relative to the camera front
Gyroscope	Format	3 x 16-bit
	Range	±17.45 rad/s (1000dps)
	Frequency (Hz)	50/100/200/500/1000
Accelerometer	Format	3 x 16-bit
	Range	± 39.2m/s² (4g)
	Frequency (Hz)	50/100/200/500/1000
Temperature	Format	1 x 16-bit
	Range	-40 ~ 85℃
	Frequency (Hz)	Follows the gyroscope and accelerometer frequency

ORBBEC. All Rights Reserved. https://www.orbbec.com/

Note: Orbbec reserves the right to change any information in the document without prior notice.

4. SDK

Orbbec SDK is a flexible and modular platform for easy camera setup and runs on multiple platforms with a rich set of APIs. It supports camera access, device setup and configuration, data stream reading, processing, and viewing, RGB-D registration, and frame synchronization.

Its functions include:

- Access and control of camera devices
- Control of frame synchronization and alignment
- Acquisition of point cloud data
- Orbbec Viewer for camera testing and evaluation

Please visit Orbbec SDK - ORBBEC - 3D Vision for a 3D World for the latest SDK.

4.1 Temperature Sensor and Recording

The temperature of camera core components can be obtained, including laser temperature, IR sensor temperature, and IMU sensor temperature, through API commands.

4.2 HDR Depth Function

The Gemini 330 series 3D cameras support HDR (High Dynamic Range) depth functionality. The HDR feature allows for clear visibility of objects in both dark and bright scenes and supports obtaining the largest possible dynamic range within the same scene. This function is commonly used in situations where objects with high and low reflectivity coexist.

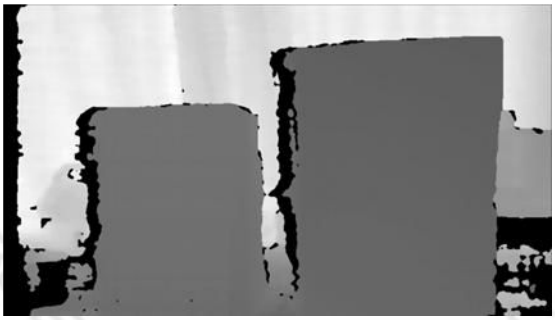

ORBBEC. All Rights Reserved. https://www.orbbec.com/

Note: Orbbec reserves the right to change any information in the document without prior notice.

5. Camera Setup and Operation

5.1 Packing List

- Orbbec Gemini 335/336/335L/336L camera
- USB Type-C to USB Type-A data + power cable
- Tripod

5.2 Initialization and Operation

- Connect Gemini 335/336/335L/336L via the USB cable to the host PC
- Download Orbbec SDK from Orbbec SDK - ORBBEC - 3D Vision for a 3D World
- Use Orbbec Viewer to validate that images can be streamed from all sensors with the following settings:
  - Depth stream: 848 x 480(default configuration)
  - Color stream: 1280 x 720(default configuration)
  - IMU enabled
- If for any reason that the camera is not responding or not being detected, please unplug all cables from the camera and replug the cable into the host PC for resetting the camera state.

5.3. Installation Guidance

Use outside of the specified conditions could cause the device to fail and/or function incorrectly. These conditions are applicable for the environment immediately around the device under all operational conditions. When used with an external enclosure, active temperature control and/or other cooling solutions are recommended to ensure the device is maintained within these ranges.

a. Installation Recommendations

1. When using external housing around the camera for dust proofing, use foam inserts or rubber gaskets between the front of the camera and the external housing.
2. Avoid external forces applied to the camera chassis during installation process.
3. Disassembling chassis and mounting brackets will void the warranty.

b. Heat Dissipation

1. Avoid direct heat source around the camera.
2. Maximizing the space inside the external housing may help lower operating temperature.

c. Cable Design Guide

It is recommended to use the included USB Type-C cable. If there is a need for longer cable, please select a USB-IF certified cable that supports both power and data (< = 3.0 m length is recommended).

ORBBEC. All Rights Reserved. https://www.orbbec.com/

Note: Orbbec reserves the right to change any information in the document without prior notice.

5.4. Ingress Protection

Gemini 335/336 & 335L/336L Ingress Protection Information

Camera	IP Rating	Protection Ability	Conditions
Gemini 335/336	IP5X	① Prevents solid objects from entering the camera. ② Cannot completely prevent dust from entering the inside of the camera, but the dust that does enter does not affect normal operation.	① Insert the Type-C cable and tighten the screws. ② Multi-camera sync 8-pin interface not in use.
Gemini 335L/336L	IP65 (USB Type-C Connector: IP67)	① Completely prevents dust from entering the camera ② Prevents low-pressure liquid spray from entering the camera	① Multi-camera sync 8-pin interface not in use.

5.5. Multi-Camera Synchronization

For a multi-camera use case, one camera can be initialized as primary, and the rest configured as secondary. Alternatively, an external signal generator can also be used as the primary trigger with all cameras set to secondary mode. When applying an external sync pulse, the HW SYNC input requires a 100-microsecond positive pulse at the nominal camera frame rate, e.g. 33.33 ms for a 30 Hz frame rate. Inputs are high impedance, 1.8V CMOS voltage levels. However, it is important to make sure to use a high-resolution signal generator. The frequency of the signal generator needs to exactly match the sensor frame rate. For example, if the sensor is set up as 30 FPS, the real frame rate may be 30.015 FPS. You may need to use an oscilloscope to measure the real frame rate and configure the signal generator to the same frequency. For this reason, it may be better to just use one additional camera as the primary sync signal generator.

Advantages of multi-camera setup:

- Increase camera coverage in a given space and fill in the occlusions where a single camera may have blind spots
- Capture multiple images of the same scene and scan objects from different angles
- Increase the effective frame rate to greater than 30 FPS

Using an 8-pin connector and matching cable, a multi-camera and multi-sensor network can be designed. (Please follow the instructions in the SDK).

Multi-camera frame synchronization in two topologies is supported, including depth image synchronization and RGB image synchronization (time difference ≤ 3ms, when auto exposure off), using the multi-camera synchronization function.

ORBBEC. All Rights Reserved. https://www.orbbec.com/

Note: Orbbec reserves the right to change any information in the document without prior notice.

Synchronization Interfaces of Gemini 330 Series Camera

Pin	Definitions	Description
Pin_1	VCC	The default electrical level setting is 1.8V; when 3.3V or 5V drive voltage is provided on the VCC interface, the I/O level setting can be adjusted to 3.3V or 5V as required.
Pin_2	GPIO_OUT	Synchronization drive signal: Active high. The high-level interval coincides with the IR exposure time. Typical application is to drive external fill light.
Pin_3	VSYNC_OUT	Synchronous trigger signal: Active high. The high level provides the triggering signal for the secondary devices.
Pin_4	TIMER_SYNC_OUT	Pulse signal source, reset hardware timestamp of secondary devices.
Pin_5	RESET_IN	Hardware reset signal: Triggers the camera to power down and automatically power up and reset. Detect the input signal: 20 Hz / 50% duty cycle / more than 5 consecutive cycles, that is, judged as normal input signal, other signals filtered out; allowed fluctuations for frequency ± 1 Hz, duty cycle ± 2%.
Pin_6	VSYNC_IN	Synchronous trigger signal: Active high, used for the triggering/sync signal from primary device, with a duration of 1 ms.
Pin_7	TIMER_SYNC_IN	Hardware timestamp reset signal input, hardware timestamp clearing.
Pin_8	GND	Ground

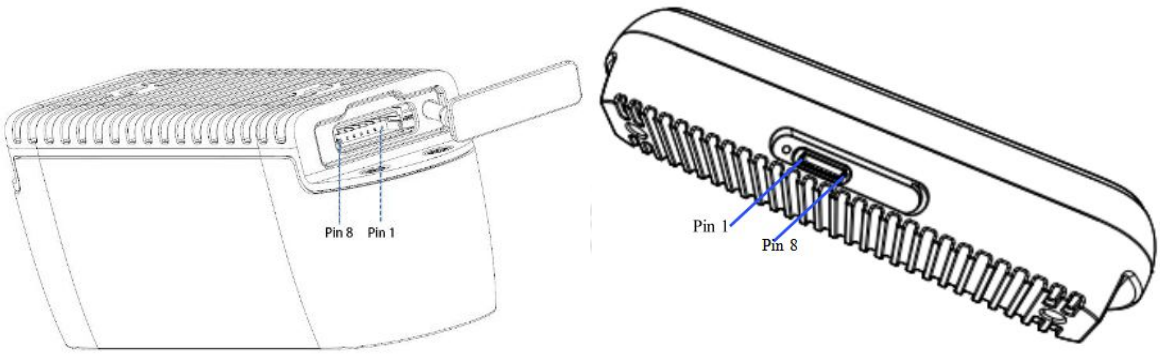

Gemini 335/336, Gemini 335L/336L Multi-Camera Synchronization Pin Placement.

ORBBEC. All Rights Reserved. https://www.orbbec.com/

Note: Orbbec reserves the right to change any information in the document without prior notice.

5.6 Safety and Handling

1. Follow the instructions to operate the camera. Improper operation may cause damage to internal components.
2. Do not drop or hit the camera with external force.
3. Do not attempt to modify the camera as such modifications may cause permanent damage or inaccuracy.
4. The temperature of the camera may increase during long periods of continuous usage.
5. Do not touch the lens. Fingerprints on the lens may affect image quality.
6. Keep the product beyond the reach of children or animals to avoid accidents.
7. If the camera is not recognized by the computer, confirm that the cable meets the power/data transfer requirements and reinsert the USB cable for reconnection.
8. This product is classified as a Class 1 Laser Product. Do not modify or service the product in any way. Modification or service of the hardware might cause its emissions to exceed the Class 1 level.
9. Do not power on the product if any external damage is observed.
10. Do not attempt to open any portion of this product. There are no user serviceable parts.
11. Do not try to update the camera's firmware to a version that is not officially released for the specific camera hardware module SKU and revision.

ORBBEC. All Rights Reserved. https://www.orbbec.com/

Note: Orbbec reserves the right to change any information in the document without prior notice.

6. Additional Information

6.1 Definition of Depth Field of View

The image below shows the depth camera field-of-view, or the angles that the sensors "see". We use the IR cameras for illustration.

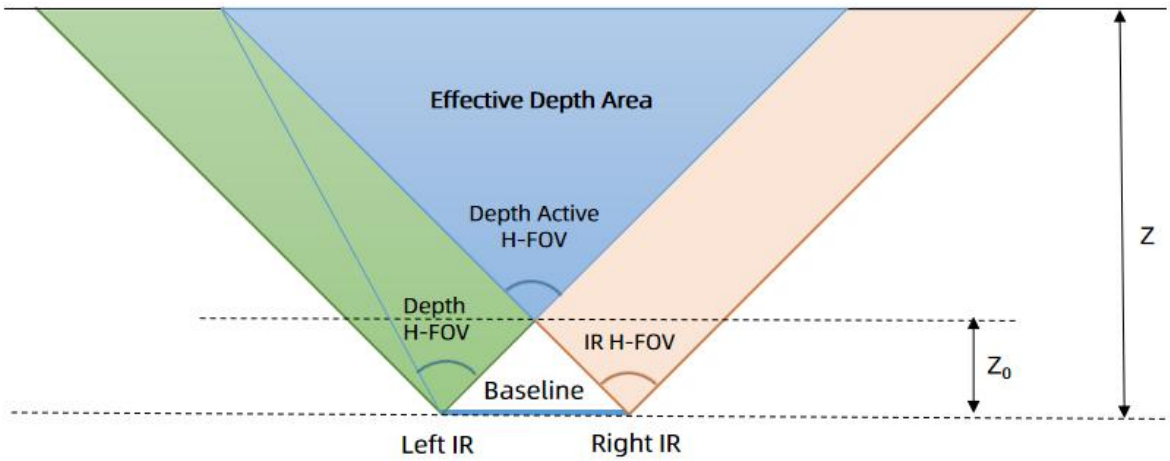

Depth Field of View (Depth FOV) at any depth (Z) can be calculated using the following equation:

$$\text{Depth H} - \text{FOV} = \arctan\left(\frac{cx}{fx} - \frac{B}{Z}\right) + \arctan\frac{width - 1 - cx}{fx}$$

$$\text{Depth Active H} - \text{FoV} = \arctan\frac{cx}{fx} + \arctan\frac{width - 1 - cx}{fx}$$

$$Z_0 = \frac{\text{B}}{2*\tan(\frac{\text{Depth Active H} - \text{FOV}}{2})}$$

$$\text{Depth V - FOV} = \arctan\left(\frac{\text{cy}}{fy}\right) + \arctan\frac{height\text{-1-}cy}{fy}$$

Definitions:

1. cx = X-direction mage coordinates of the principle point of the depth image
2. fx= Depth camera focal length
3. cy= Y-direction mage coordinates of the principle point of the depth image
4. fy=Depth camera focal length
5. width= Depth image width
6. Height=Depth image height
7. Depth active ***H-FOV*** =Left IR ***H-FOV***

Note:

1. ***cx, fx***, and width parameters are obtained through the SDK Depth Intrinsic for the relevant camera parameters, and each depth camera parameters are not the same.

2. At different depth values, the depth FOV is different. The farther the depth, the greater the depth FOV.

ORBBEC. All Rights Reserved. https://www.orbbec.com/

Note: Orbbec reserves the right to change any information in the document without prior notice.

Summary table of typical parameters for depth cameras:

ORBBEC. All Rights Reserved. https://www.orbbec.com/
Note: Orbbec reserves the right to change any information in the document without prior notice.

6.2 Depth Field of View Illustration

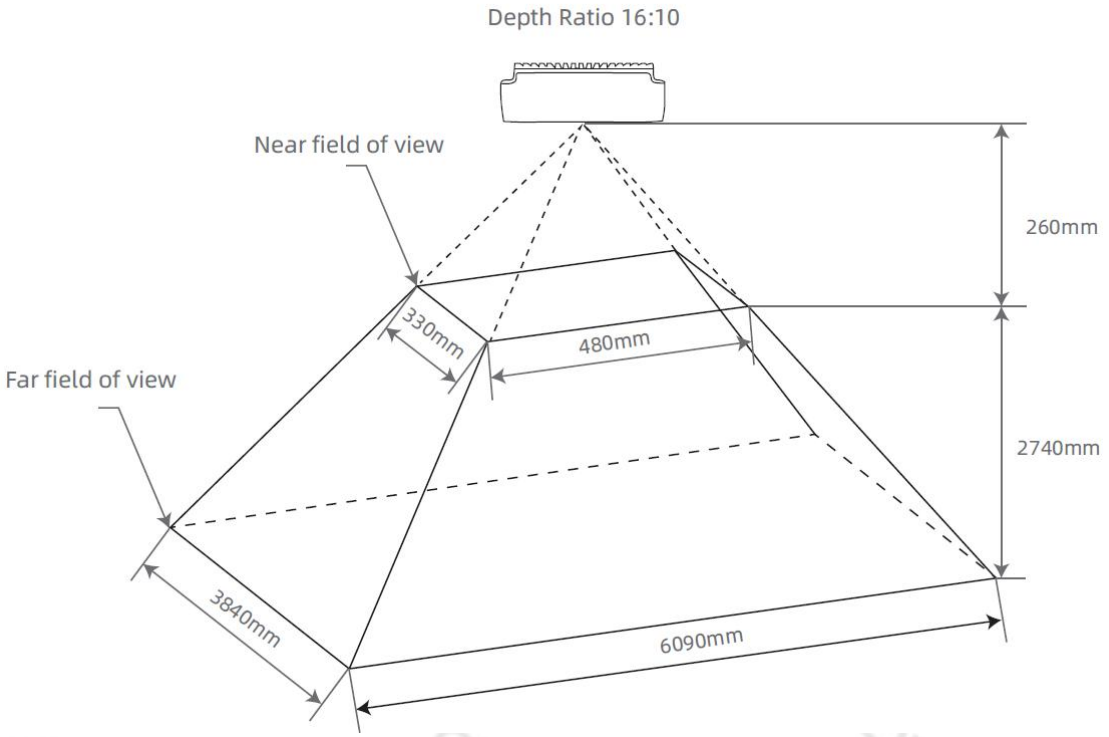

Gemini 335/336 Depth FOV for Aspect Ratio = 16:10

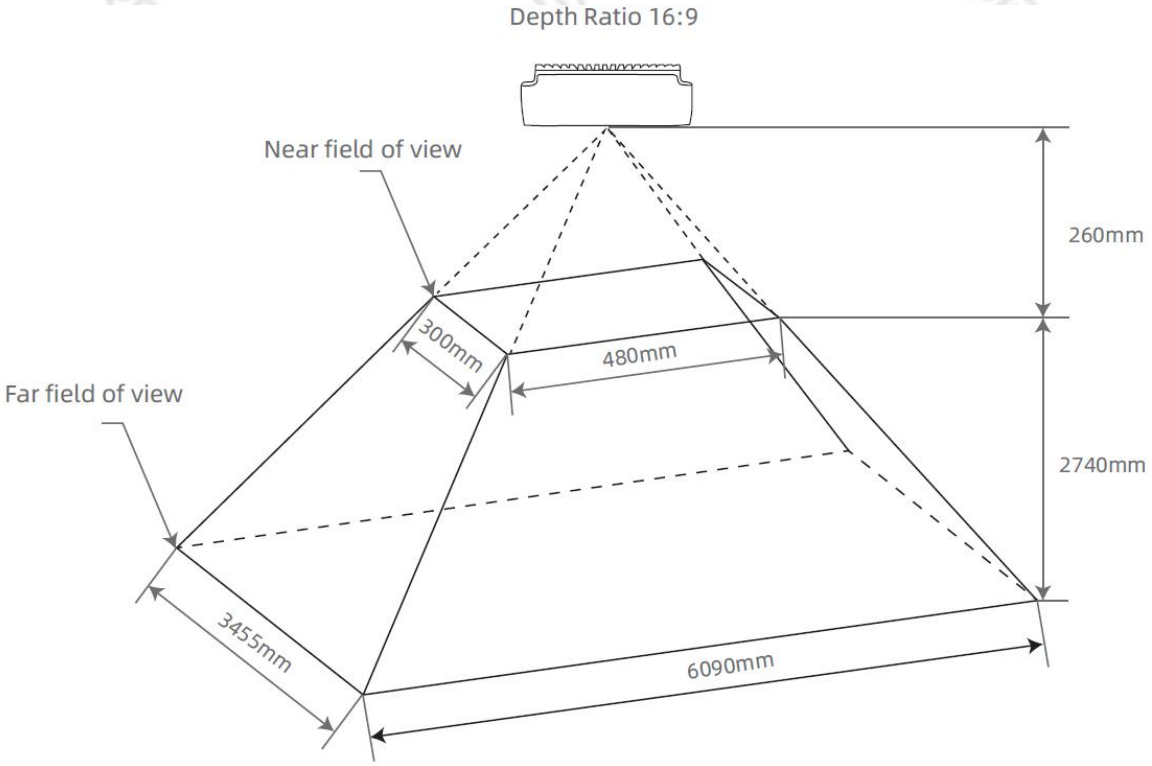

Gemini 335/336 Depth FOV for Aspect Ratio = 16:9

ORBBEC. All Rights Reserved. https://www.orbbec.com/
Note: Orbbec reserves the right to change any information in the document without prior notice.

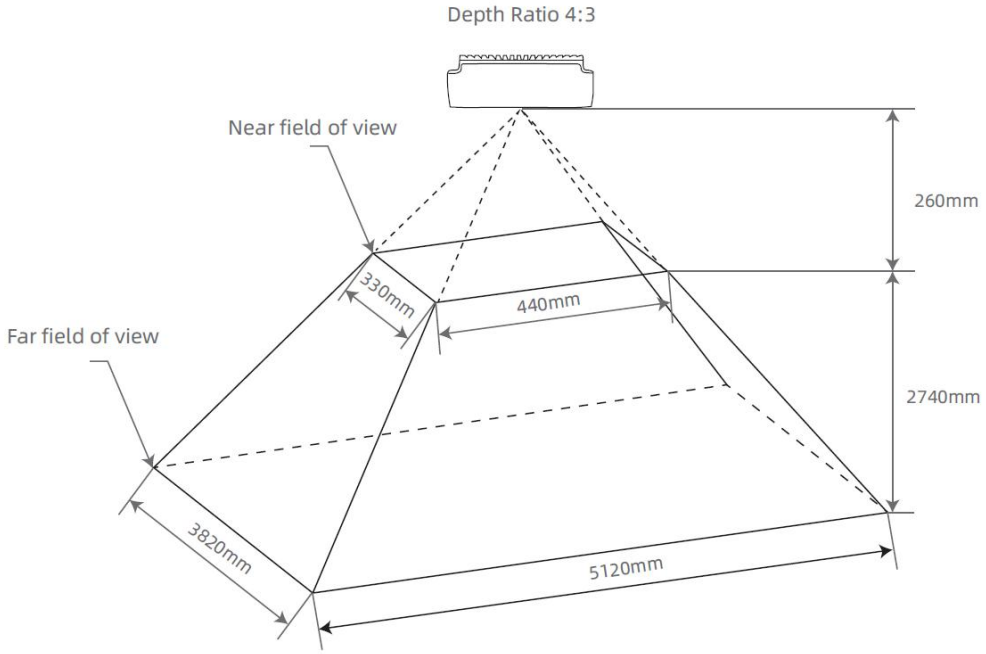

Gemini 335/336 Depth FOV for Aspect Ratio = 4:3

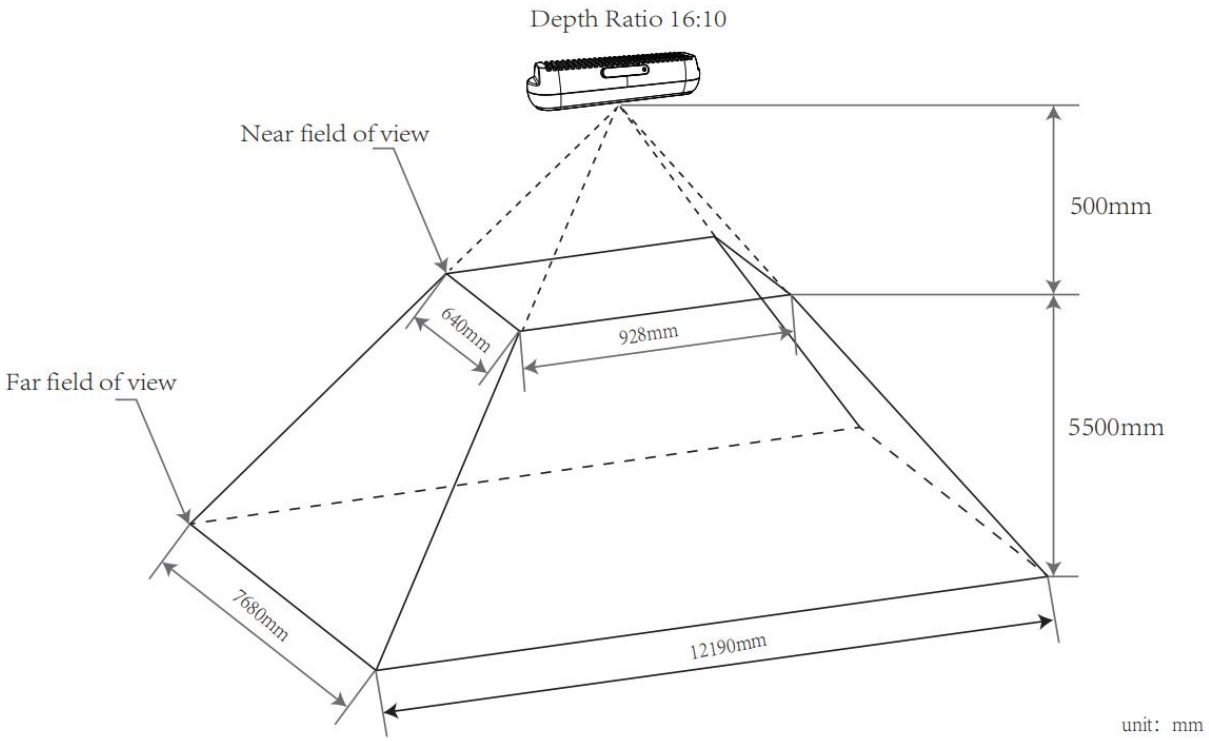

Gemini 335L/336L Depth FOV for Aspect Ratio = 16:10

ORBBEC. All Rights Reserved. https://www.orbbec.com/
Note: Orbbec reserves the right to change any information in the document without prior notice.

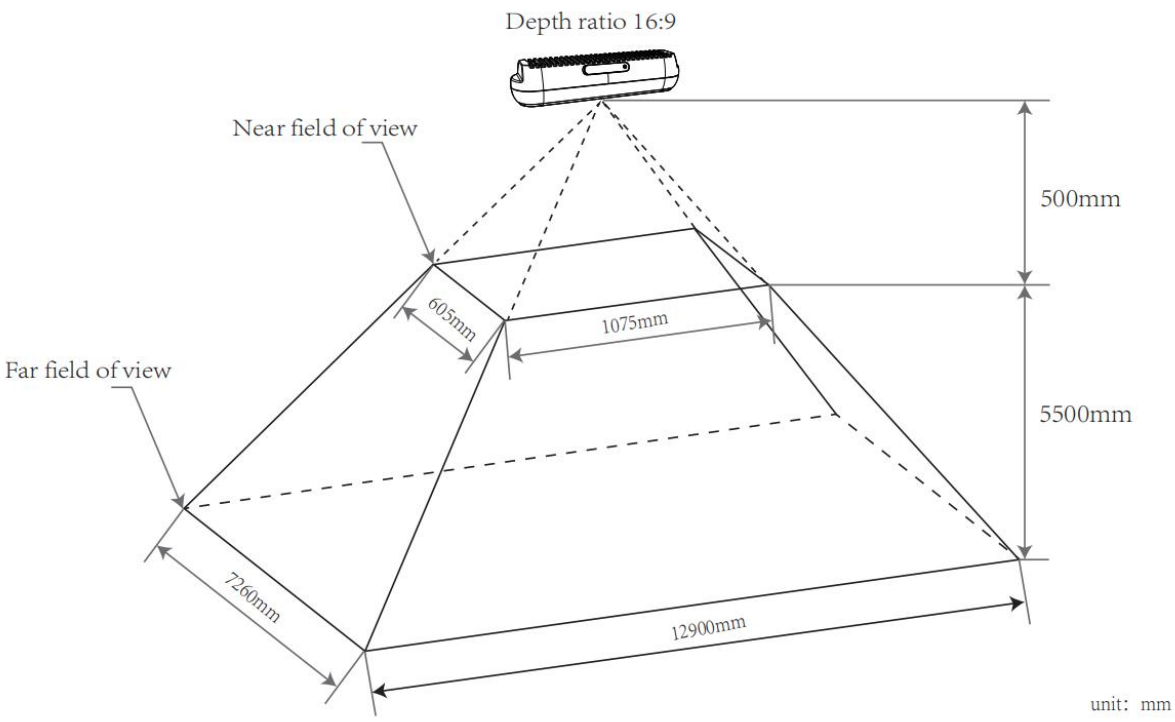

Gemini 335L/336L Depth FOV for Aspect Ratio = 16:9

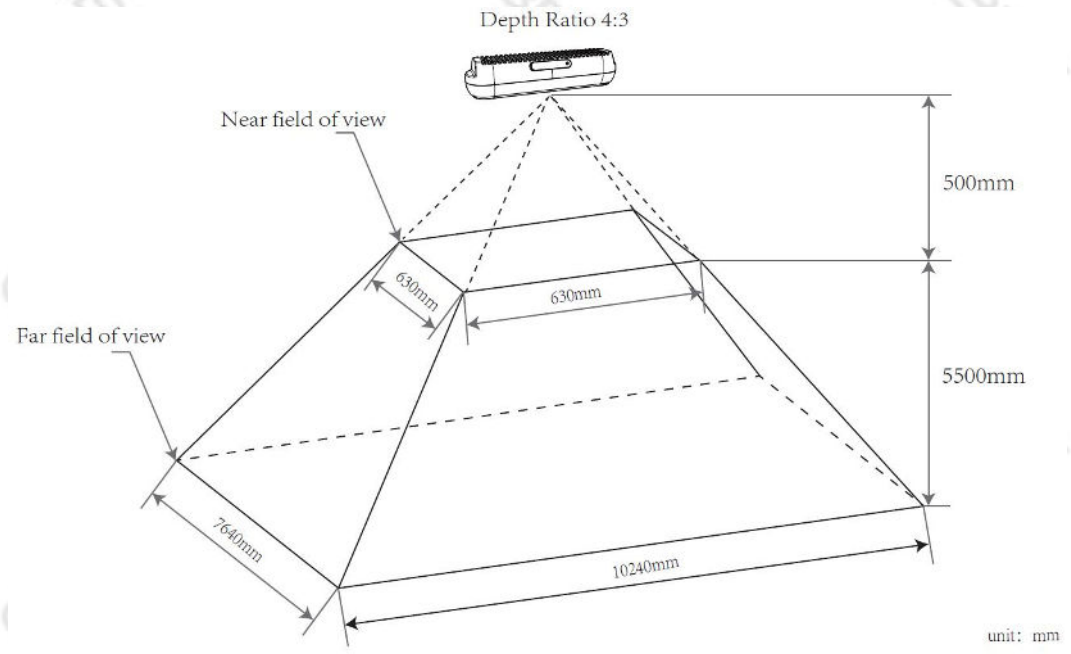

Gemini 335L/336L Depth FOV for Aspect Ratio = 4:3

ORBBEC. All Rights Reserved. https://www.orbbec.com/
Note: Orbbec reserves the right to change any information in the document without prior notice.

6.3 Depth Quality Assessment

Calculation of Depth Accuracy (Z-accuracy):

Depth accuracy (Z-accuracy) refers to the difference between the depth of effective pixels on a fitted plane and the true value plane, which can be either positive or negative.

Calculation method: Use a flat plate parallel to the x-axis of the module, and measure the distance with a laser rangefinder or tape measure as the Ground Truth (GT) surface. Collect the depth map at the current distance, and obtain the difference between the effective pixels in the ROI area and the true values to create an error map. Use the median of the error map as the Z-accuracy of the current depth map. To avoid errors from single measurements, take N depth maps and calculate the average or the ratio of the average to the true values as the final Z-accuracy.

Calculation of Spatial Precision:

The spatial precision is calculated as the percentage of the root mean square error (RMS Error) between each valid pixel and the optimal fitting plane compared to the true value (GT).

Depth Fill Rate Calculation:

The fill rate is used to calculate the proportion of valid pixels to total pixels within the target area (ROI region), primarily used to measure the completeness of depth.

7.Regulatory Compliance

EMC: CE, FCC, KC, IC, UKCA,KC,RCM

Environment: RoHS 2.0, REACH, WEE

Laser: Class 1 Laser Product, FDA (Accession Number: **2420619-000**)

ORBBEC. All Rights Reserved. https://www.orbbec.com/

Note: Orbbec reserves the right to change any information in the document without prior notice.

8. Glossary of Terms

Terms	Descriptions
D2C	Depth to Color maps each pixel on a depth map to the corresponding color image according to the intrinsic and extrinsic parameters of the depth camera and color camera
Depth	Depth video streams are similar to color video streams except each pixel has a value representing the distance away from the sensor instead of color information
Depth Camera	Includes depth imaging module and external interface, of which the former is generally composed of an infrared projector, infrared camera, and depth computing processor
FOV	Field of View describes the angular extent of a given scene that is captured by a camera, which can be measured in the horizontal, vertical, and diagonal.
I2C	Refers to a simple bi-directional two-wire synchronous serial bus developed by Philips.
IR	Light in the infrared spectrum, which ranges from 780 nm to 1 mm
IR Camera	A camera capable of seeing light in the IR spectrum
IR Flood	IR floodlights are used to illuminate the environment without a pattern
ISP	Image signal processor, which is used for image post-processing
LDM	Light Detection Module
LDP	Light Detection Photodiode
LRM	Light Ranging Module
MIPI	Mobile Industry Processor Interface (MIPI) Alliance. MIPI is an open standard and specification formulated by the MIPI Alliance for mobile application processors
PCBA	Circuit board consisting of depth computing processor, memory, and other electronic components
Point Cloud	A discrete set of data points in space
SoC	System on Chip, an integrated circuit (IC) that integrates all components of a computing system
TBD	To Be Determined. In the context of this document, information will become available in a later revision.

ORBBEC. All Rights Reserved. https://www.orbbec.com/

Note: Orbbec reserves the right to change any information in the document without prior notice.

ORBBEC. All Rights Reserved. https://www.orbbec.com/
Note: Orbbec reserves the right to change any information in the document without prior notice.