WHILL

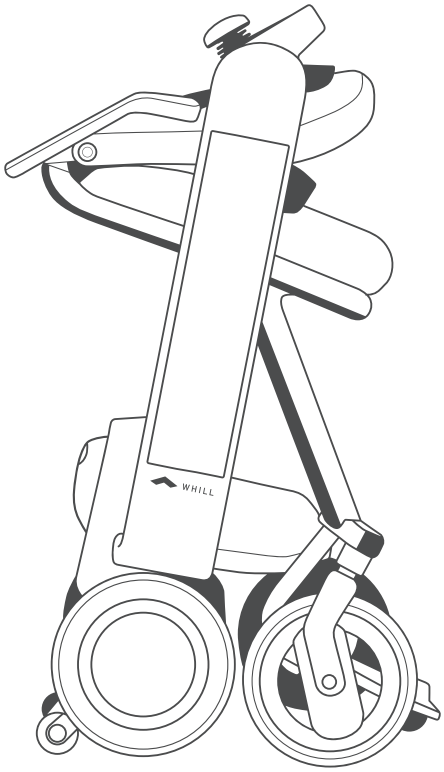

User Manual

WHILL Model F

en

Introduction

Thank you for your purchase of the WHILL Model F. This device is intended to provide outdoor and indoor mobility to individuals who are comfortable with operating a powered wheelchair.
This user manual is intended for users of this device and instructs how to safely operate the device. It also explains the basic adjustments, inspections, troubleshooting, and the basic maintenance procedures to be performed by the user.
This manual can also be used by dealers, sales staff, and others in order to gain a detailed understanding of the main functions.
This manual explains the various parts of this device by means of text, illustrations and standard terms.
WHILL is dedicated to ensuring the safety, comfort, and convenience of the users. Please read this manual carefully before use, and be sure to use the device correctly and safely. Store this manual in a location where it can be referred to whenever needed.

- This manual contains information that is protected by patent rights and copyrights. It may not be reproduced in part or in whole without explicit written permission from WHILL.
- The contents of this manual may be changed at any time without notice.
  For the latest information about the device, visit the WHILL Website (https://whill.inc).
- Use of this device in ways not defined in this manual may result in damage to the device. Please contact your dealer or customer support if you notice any inaccuracies or omissions in this manual.

Intended Purpose:
The intended use of the WHILL Model F powered wheelchair is to provide mobility to individuals who are comfortable with operating a powered wheelchair. Its usage may vary depending on the countries and areas.

Manual overview

The symbols used throughout this manual are described below. Be sure to observe the instructions indicated by each symbol.

Symbol	Description
WARNING	Indicates critical instructions to prevent an imminently hazardous situation that may result in death or serious injury.
CAUTION	Indicates instructions to prevent a potentially hazardous situation that may result in minor injury, property damage or both.

	Indicates a required act.
	Indicates a prohibited act.

	Indicates precautions or reference information that must be read in order to prevent device malfunctions or failures, and to ensure comfortable device use.

	Reading the instruction manual/booklet before starting work or before operating equipment or machinery.

WHILL

Contents

Introduction 1

Manual overview 2

1. Safety precautions 6
   - 1.1. EMI (Electromagnetic Interference) 10
     - 1.1.1. General Q&A on EMI and RFI 10
     - 1.1.2. Important information regarding Electro Magnetic Compatibility (EMC) 11
     - 1.1.3. FCC and ISED information 14
   - 1.2. Labels on the device 16
   - 1.3. Reporting of serious incident 16

2. About the device 18
   - 2.1. Packaged items 18
   - 2.2. Names and functions of parts 18
   - 2.3. Accessories 21

3. Assembly and adjustment 22
   - 3.1. Names of parts 22
     - 3.1.1. Before assembling the device 24
   - 3.2. Assembly procedures 25
     - 3.2.1. Unfolding the device 26
     - 3.2.2. Installing the color plate 28
     - 3.2.3. About installing the arm rests 29
     - 3.2.4. Installing the arm rests 31
     - 3.2.5. Adjusting the height of the arm rest 43
     - 3.2.6. Connecting the cable 44
     - 3.2.7. Installing the seat cushion onto the seat 45
     - 3.2.8. Installing the battery 46
   - 3.3. Adjustment procedures 47
     - 3.3.1. Adjusting the height of the arm rest 48
     - 3.3.2. Changing the space between arm rests 50
     - 3.3.3. Switching the position of the controller 53

4. Charging the battery 56
   - 4.1. Battery and charger components 58
     - 4.1.1. Removing the battery 59

4.2. Charging procedure 60
4.2.1. Charging with the battery installed in the device 62
4.2.2. Charging with the battery removed 64
4.2.3. Charger indicator displays 67
5. Operating procedures 68
5.1. Inspection before getting in the device 69
5.2. Getting in the device 70
5.2.1. Accessing the seat from the front 72
5.3. Tightening the lap belt 74
5.3.1. Removing the lap belt 74
5.4. Turning on the power 75
5.4.1. Checking the battery charge level 76
5.4.2. Controlling the speed 76
5.4.3. Using the horn button 76
5.5. Driving 77
5.5.1. Moving forward and backward 80
5.5.2. Moving in a diagonal direction 80
5.5.3. Turning 81
5.5.4. Stopping 81
5.5.5. Adjusting the speed 82
5.5.6. Driving under different road conditions 83
5.6. Releasing the brakes 84
5.6.1. Release procedure 84
5.7. Carrying items 85
6. Folding Procedure 86
6.1. Safety notices 86
6.2. How to fold the device 87
6.3. How to unfold the device 89
7. Storage and transport methods 92
7.1. Storage 92
7.2. Transporting the device 93
7.2.1. Transporting the device with the device in a folded state 94
7.2.2. Loading the device into a trunk 96
7.2.3. Removing the arm rest with controller for transportation 97

8. About the smartphone app 100
9. Maintenance and inspection 102
9.1. User maintenance 102
9.2. Reinstalling the joystick 104
9.3. Inspection 105
9.4. Repair, maintenance, and parts replacement performed by the manufacturer or dealer 105
9.5. Disposal 105
9.6. About warranty information 105
9.7. Reuse information 105
9.8. How to check the manufacture date of the device 106
10. Troubleshooting 108
11. Specifications and test results 110
11.1. Specifications 110
11.2. Dimensions and test results 112
Symbols 114
Index 115
Contact information 117

1. Safety precautions

Complete attention to safety has been given in the design of the device. However, injury or damage is possible if the device is used incorrectly or if precautions are ignored.
The descriptions related to safety utilize the terms "WARNING" and "CAUTION" to indicate the degree of injury or damage and the level of danger. "WARNING" is critical instructions to prevent an imminently hazardous situation that may result in death or serious injury. "CAUTION" is instructions to prevent a potentially hazardous situation that may result in minor injury or property damage or both.
The WHILL Model F is a mobility vehicle. Be sure to correctly understand the contents of this manual before using the device. Persons who find it difficult to use a powered wheelchair should refrain from using the device. Pay attention to the following precautions when using and handling the device.

- **The device is designed for use on ordinary paved roads or indoor use.**
- **If this device is being operated by an assistant, the operator must carefully read this manual and fully understand the usage precautions before using it.**
  Also, refrain from operating the device if help is not available.

1. For using the device

⚠ WARNING

- **If the device shows any abnormal signs, immediately discontinue use, and contact your dealer or customer support.**
  Using the device when it is malfunctioning can potentially cause an injury or accident.
- **Before boarding the device, check that the device has been properly unlocked and all components are correctly assembled. Check for any missing or broken components, and check that the brakes are locked.**
  There is a risk of injury or accident. If components need to be replaced or repaired, stop using the device immediately and contact your dealer or technical support.
- **Carefully read the explanations in this manual regarding the battery and charger, and follow the instructions.**
  There is a risk of fire or battery explosion when disassembling the battery or charger. Do not allow flames near the battery or charger, avoid getting the battery and charger wet or subjecting them to impact (dropping, penetration with nails, or standing on them), etc.
- **Turn off the device power when not operating.**
  There is a risk of accidental contact with the controller that could cause unexpected movement of the device.
- **Unsafe in the Magnetic Resonance (MR) Environment.**
  The WHILL Model F is MR Unsafe. The device presents a projectile hazard.
- **The maximum load weight for this device is 253.5 lb (approx. 115 kg). It includes both the occupant and any luggage. Use the device without subjecting it to a load higher than this limit.**
  There is a risk of damaging the device.

⚠ WARNING

- **Do not sit on the controller, place the controller on the ground with the device folded, or apply an excessive load to the controller. Do not press the controller or switches with excessive force or operate them with a sharp object.**
  There is a risk that the controller may be damaged, rendering the device inoperable.
- **Do not jump onto the foot rest, stand on the foot rest, or place an excessive load on the foot rest.**
  There is a risk of the device lifting up and tipping.
- **Do not ride on the foot pedal between the anti-tip rollers.**
  There is a risk of tipping over. The device may lose its anti-tipping functionality if the anti-tip rollers and foot pedal are deformed. The anti-tip rollers and foot pedal must be replaced if they are deformed. Contact your dealer or technical support.
- **Do not apply stickers or paint onto the switches, display, or labels.**
  There is a risk that these components may not be visible, resulting in incorrect operation and accident.
- **Do not hoist the device when there is a person on the device.**
  There is a risk of falling or tipping over.
- **Do not use the device as a seat in an automobile or other vehicle.**
  There is a risk the device may become damaged and accidents may occur. The symbol on the right indicates that the device is not intended to be used as a seat in a motor vehicle.

⚠ CAUTION

- **If the device is not used for a long period, ensure the battery is fully charged before storing. Charge the battery at least once a month.**
  There is a risk that the battery may get excessively depleted and cannot be charged.
- **Take note of the surface temperature of the device when using the device.**
  The surface temperatures of the device can increase/decrease extremely when exposed to external sources of heat or cold.

2. When getting in the device and driving the device

⚠ WARNING

- **Turn off the device power when getting in and out of the device.**
  There is a risk of unexpected movement of the device caused by accidental contact with the controller.
- **When driving, fully check the surroundings and road conditions. Drive carefully at low speed particularly when driving in locations crowded with people, close to walls or other locations where there are obstacles nearby, and in narrow places or on uneven surfaces or slopes.**
  Otherwise, there is a risk of accident. When driving on wet inclines, there is a risk that the device may loose stability. Pay close attention when driving.
- **When approaching curbs, steps, slopes, and similar obstacles, approach at a 90° angle and drive over them carefully at low speed.**
  There is a risk of tipping over or deforming the drive base.
- **Be sure to lower the foot rest while driving. Also, keep your feet on the foot rest, and prevent your feet from extending outside the width of the foot rest.**
  Otherwise, there is a risk that your feet may get caught in the front wheels.
- **When stopping on a downhill slope, release the controller early, and make sure that the device stops with an ample amount of extra space around it.**
  The stopping distance is longer when on a downhill slope. There is a risk that you may be unable to stop in the intended position, causing an accident.
- **Release the brakes only when on a flat surface and in emergencies after turning off the power. After moving the device manually with the brakes released, raise the brake release levers and lock the brakes.**
  There is a risk accidents may occur because the device will move freely when the brakes are released.

- **Do not drive the device in the following areas.**
  The device may tip over and there is a risk of accidents.
  - Escalators or stairs
  - Steps higher than approximately 1.4 inches (35 mm)
  - Slopes with a gradient of 10° or more
  - Soft surfaces such as sand or mud
  - Snowy or frozen paths
- **Do not release the brakes and move the device manually except in emergencies.**
  There is a risk accidents may occur because the brakes do not work.
- **While riding the device, do not crouch down, lean out of the device, or exercise. Pay attention to the center of mass while driving.**
  There is a risk the device stability and balance will be affected. Request help from those around the device before reaching for inaccessible objects.
- **Do not drive while holding something in your hand or with something placed on your lap.**
  There is a risk of unintended movement of the device.
- **Do not go off curbs or steps that are higher than approximately 1.4 inches (35 mm)**
  This may cause the anti-tip rollers to catch on the step and the device may no longer be able to be driven.

3. When assembling or adjusting

⚠ WARNING

- **Assemble the device in the order described in this user manual. Do not perform any adjustment, repair, or modification that is not listed in this manual.**
  There is a risk of injury and product safety risk due to damage to the device or its parts.
  Performing repair or modification which is not listed in this manual will invalidate the warranty.
- **Perform adjustment on a flat and level surface with the battery removed and brakes locked.**
  Otherwise, there is a risk of accident.

- **Do not touch the connectors directly, allow them to become wet, or bring any metal or other foreign objects close to them. Ensure that there are no foreign objects when assembling.**
  Otherwise, there is a risk of injury and of damage to the device or its parts.

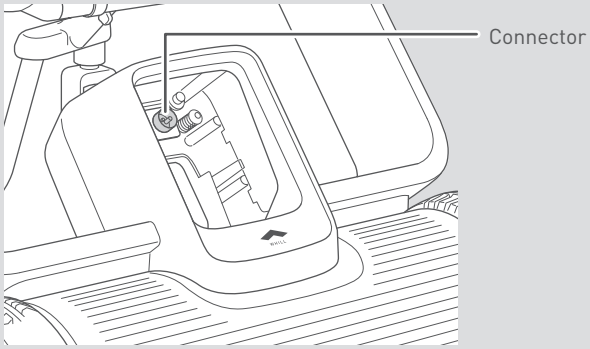

- **Do not press a sharp object against or apply a load to the cable under the seat.**
  The damaged cable may cause malfunctions or unexpected device operation.

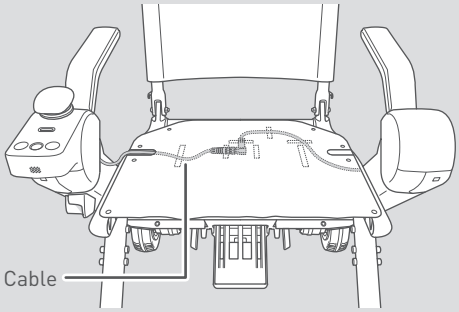

1.1. EMI (Electromagnetic Interference)

There is a risk of unintended movement of this device as a result of radio waves. Avoid driving in an area where strong electromagnetic waves are generated such as areas around high-tension wires, television towers, etc. Radio waves may interfere with the control functions of this device.
The device may also emit its own electromagnetic fields and may disturb the operation of other nearby devices.
To reduce the chance of unintended device movement, which could result in serious injury, pay careful attention to the following instructions.

- Do not operate hand-held transceivers (transmitters receivers), such as citizens band (CB) radios, or turn on personal communication devices, such as cellular phones, while the device is turned on;
- Look for nearby transmitters, such as radio or TV stations, and try to avoid coming close to them;
- Be aware that adding accessories or components, or modifying the device, may make it more susceptible to EMI.

If the device moves or stops when the device controller is not operated, or if the device operates in a way different than intended, take the following actions.

- Turn off the device as soon as it is safe.
- Record the controller operation that was being performed at that time.
- Record the device operation that could not be activated using the controller.
- Record the mobile phones and other electronic devices that may be sources of radio waves and were near the device.

Based on these notes, consider the possible cause of radio frequency interference and remove it. If the problem is still not resolved, consult with your dealer or customer support. Keep your earlier notes handy while talking with them.

If radio frequency interference is suspected, turn off the power and disconnect the battery.

1.1.1. General Q&A on EMI and RFI

The following are general questions and answers regarding steps to avoid nearly all of the effects of EMI and RFI with this device. Please use them as reference.

- **Where do radio waves come from?**

  Radio waves are emitted by unidirectional or bidirectional radio devices. Such devices include transceivers, mobile phones, wireless computer links, microwave generators, and radio call transmitters. Radio waves are a form of electromagnetic energy, and the strength of the energy increases at closer distances to the transmitting antenna. This electromagnetic field can cause problems for users of electric equipment.

- **What kind of movements should I expect if the device is affected by EMI or RFI?**

  EMI and RFI undergo extremely large dynamic changes and may affect a device depending on conditions such as the following.

  - Radio wave frequency and strength

- Structure of the power supply equipment
- Inclination of the device (whether the ground is flat or slanted)
- Whether the device is turned on and whether it is moving

If this device is affected, there is a possibility of abnormal movement. It may begin moving uncontrollably or stop suddenly. Strong EMI or RFI can damage the control system.

1.1.2. Important information regarding Electro Magnetic Compatibility (EMC)

Below cables information are provided for EMC reference.

Cable	Max. cable length, Shielded/unshielded		Number	Cable classification
AC Power Line	1.5 m	Unshielded	1 Set	AC Power
DC Power Line	1.2 m	Unshielded	1 Set	DC Power

This electrical medical equipment needs special precautions regarding EMC and put into service according to the EMC information provided in the user manual; The equipment conforms to this IEC 60601-1-2 standard for both immunity and emissions. Nevertheless, special precautions need to be observed:

- The equipment is intended for use in the home healthcare environment.
- If the essential performance of the equipment is lost or degraded due to electromagnetic disturbances, unintended acceleration, stop, or control may occur.
- WARNING: Use of this equipment adjacent to or stacked with other equipment should be avoided because it could result in improper operation. If such use is necessary, this equipment and the other equipment should be observed to verify that they are operating normally.
- The use of accessories, transducers and cables other than those specified or provided by the manufacturer of this equipment could result in increased electromagnetic emissions or decreased electromagnetic immunity of this equipment and result in improper operation.
- WARNING: Portable RF communications equipment (including peripherals such as antenna cables and external antennas) should be used no closer than 30 cm (12 inches) to any part of the Model F, including cables specified by the manufacturer. Otherwise, degradation of the performance of this equipment could result.
- WARNING: If the use location is near (e.g. less than 1.5 km from) AM, FM or TV broadcast antennas, before using this equipment, it should be observed to verify that it is operating normally to assure that the equipment remains safe with regard to electromagnetic disturbances throughout the expected service life.
- When the AC input voltage is interrupted, the equipment will stop battery charging and if the power supply restored, it could be recovered automatically, this degradation could be accepted because it will not lead to unacceptable risks and it will not result in the loss of basic safety or essential performance.

During all immunity tests, a digital tachometer was used to monitor the rotating speed of wheel and a clamp meter was used to monitor the output current of battery charger to verify the performance of EUT.

EMI Compliance Table (Table 1)

Table 1 - Emission

Phenomenon	Compliance	Electromagnetic environment
RF emissions	CISPR 11 Group 1, Class B	Home healthcare environment
Harmonic distortion	IEC 61000-3-2 Class A	Home healthcare environment
Voltage fluctuations and flicker	IEC 61000-3-3 Compliance	Home healthcare environment

EMS Compliance Table (Table 2-5)

Table 2 - Enclosure Port

Phenomenon	Basic EMC standard	Immunity test levels Home healthcare environment
Electrostatic Discharge	IEC 61000-4-2	±8 kV contact ±2 kV, ±4 kV, ±8 kV, ±15 kV air
Radiated RF EM field	IEC 61000-4-3	20 V/m 26 MHz-2.5 GHz 80% AM at 1 kHz 10 V/m 80 MHz-2.7 GHz 80% AM at 1 kHz
Proximity fields from RF wireless communications equipment	IEC 61000-4-3	Refer to table 3
Rated power frequency magnetic fields	IEC 61000-4-8	30 A/m 50 Hz or 60 Hz
Proximity magnetic fields	IEC 61000-4-39	30 kHz, CW, 8 A/m 134.2 kHz, pulse modulation 2.1 kHz, 65 A/m 13.56 MHz, pulse modulation 50 kHz, 7.5 A/m

Table 3 - Proximity fields from RF wireless communications equipment

Test frequency (MHz)	Band (MHz)	Immunity test levels Home healthcare environment
385	380-390	Pulse modulation 18 Hz, 27 V/m
450	430-470	FM, ±5 kHz deviation, 1 kHz sine, 28 V/m
710	704-787	Pulse modulation 217 Hz, 9 V/m
745		
780		
810	800-960	Pulse modulation 18 Hz, 28 V/m
870		
930		
1720	1700-1990	Pulse modulation 217 Hz, 28 V/m
1845		
1970		
2450	2400-2570	Pulse modulation 217 Hz, 28 V/m
5240	5100-5800	Pulse modulation 217 Hz, 9 V/m
5500		
5785		

Table 4 - Input a.c. power Port

Phenomenon	Basic EMC standard	Immunity test levels Home healthcare environment
Electrical fast transients/ burst	IEC 61000-4-4	±1 kV ±2 kV 100 kHz repetition frequency
Surges Line-to-line	IEC 61000-4-5	±0.5 kV, ±1 kV
Conducted disturbances induced by RF fields	IEC 61000-4-6	3 V, 0.15 MHz-80 MHz 6 V in ISM bands and amateur radio bands between 0.15 MHz and 80 MHz 80% AM at 1 kHz
Voltage dips	IEC 61000-4-11	0% U_T; 0.5 cycle At 0º, 45º, 90º, 135º, 180º, 225º, 270º and 315º
		0% U_T; 1 cycle and 70% U_T; 25/30 cycles Single phase: at 0º
Voltage interruptions	IEC 61000-4-11	0% U_T; 250/300 cycles

Table 5 - Signal input/output parts Port

Phenomenon	Basic EMC standard	Immunity test levels Home healthcare environment
Conducted disturbances induced by RF fields	IEC 61000-4-6	3 V, 0.15 MHz-80 MHz 6 V in ISM bands and amateur radio bands between 0.15 MHz and 80 MHz 80% AM at 1 kHz

1.1.3. FCC and ISED information

The controller on the WHILL Model F contains the following wireless communication modules that are regulated by the FCC (Federal Communications Commission) and the ISED (Innovation, Science and Economic Development Canada).

- Model No: MDBT42Q-P192K
  FCC ID: SH6MDBT42Q
  IC: 8017A-MDBT42Q

The controller is labelled with an FCC ID and an ISED certification number. The label is accessible without the use of tool by removing the controller as shown in Section "Switching the position of the controller".

● **FCC Information**

This device complies with part 15 subpart B and C of the FCC rules. Operation is subject to the following two conditions.

(1) This device may not cause harmful interference.

(2) This device must accept any interference received, including interference that may cause undesired operation.

This equipment has been tested and found to comply with the limits for a Class B digital device, pursuant to part 15 of the FCC Rules. These limits are designed to provide reasonable protection against harmful interference in a residential installation. This equipment generates, uses, and can radiate radio frequency energy and, if not installed and used in accordance with the instructions, may cause harmful interference to radio communications. However, there is no guarantee that interference will not occur in a particular installation. If this equipment does cause harmful interference to radio or television reception, which can be determined by turning the equipment off and on, the user is encouraged to try to correct the interference by one or more of the following measures:

- Reorient or relocate the receiving antenna.
- Increase the separation between the equipment and receiver.
- Connect the equipment into an outlet on a circuit different from that to which the receiver is connected.
- Consult the dealer or an experienced radio/TV technician for help.

CAUTION: Changes or modifications not expressly approved by the manufacturer could void the user's authority to operate this equipment.

This device meets the government's requirements for exposure to radio waves. This device is designed and manufactured not to exceed the emission limits for exposure to radio frequency (RF) energy set by the Federal Communications Commission of the U.S. Government.

RF Exposure Warning

This equipment must be installed and operated in accordance with provided instructions and the antenna(s) used for this transmitter must be installed to provide a separation distance of at least 20 cm from all persons and must not be co-located or operating in conjunction with any other antenna or transmitter. End-users and installers must be provided with antenna installation instructions and transmitter operating conditions for satisfying RF exposure compliance.

- ISED Information

  This Class B device complies with Canadian ICES-3 (B). This device contains licence-exempt transmitters/receivers that comply with Innovation, Science and Economic Development Canada's license-exempt RSS(s). Operation is subject to the following two conditions: (1) This device may not cause interference. (2) This device must accept any interference, including interference that may cause undesired operation of the device.

  Cet appareil numérique de la classe B est conforme à la norme NMB-3 (B) du Canada. L'émetteur/récepteur exempt de licence contenu dans le présent appareil est conforme aux CNR d'Innovation, Sciences et Développement économique Canada applicables aux appareils radio exempts de licence. L'exploitation est autorisée aux deux conditions suivantes : (1) L'appareil ne doit pas produire de brouillage; (2) L'appareil doit accepter tout brouillage radioélectrique subi, même si le brouillage est susceptible d'en compromettre le fonctionnement.

Radio Frequency (RF) Exposure Information

The radiated output power of the Wireless Device is below the ISED radio frequency exposure limits. The Wireless Device should be used in such a manner such that the potential for human contact during normal operation is minimized.

This device has been evaluated for and shown compliant with the ISED Canada RF Exposure limits under mobile exposure conditions (antennas are greater than 20 cm from a person's body).

Informations concernant l'exposition aux fréquences radio (RF)

La puissance de sortie émise par l'appareil sans fil est inférieure à la limite d'exposition aux fréquences radio d'ISDE Canada. Utilisez l'appareil sans fil de façon à minimiser les contacts humains lors du fonctionnement normal.

Ce dispositif a été évalué et démontré conforme aux limites d'exposition aux RF d'ISDE Canada dans des conditions d'exposition à des appareils mobiles (antennes sont supérieures à 20 cm à partir du corps d'une personne).

1.2. Labels on the device

Warning labels are attached on the area where there are possible hazards. Also, labels indicate the important information for using the device such as the device information, lock and unlock positions of levers, etc.
There may be additional labels not described in this user manual depending on the sales area or model.

⚠ CAUTION

- **Do not remove the labels.**
  The labels contain important information.

1.3. Reporting of serious incident

Any serious incident that has occurred in relation to the device shall be reported immediately to WHILL and the competent authority in which the user is located. Refer to “Contact information”.

2. About the device

2.1. Packaged items

The packaged device contains the following items. Before using the device, be sure to check that there are no missing items or damaged parts on the device. If the device is defective, there are shipping damages, any item is missing, or the packaging was unintentionally opened, do not use the device and contact the distributor or customer support.

- WHILL Model F (device)
- Color plate
- Arm rest with controller
- Arm rest with hand rest
- Seat cushion
- Battery
- Charger
- User manual (this manual)
- Pocket reference
- App pairing ID/password label

Be careful not to scratch packaged items when opening packages.

2.2. Names and functions of parts

■ Device

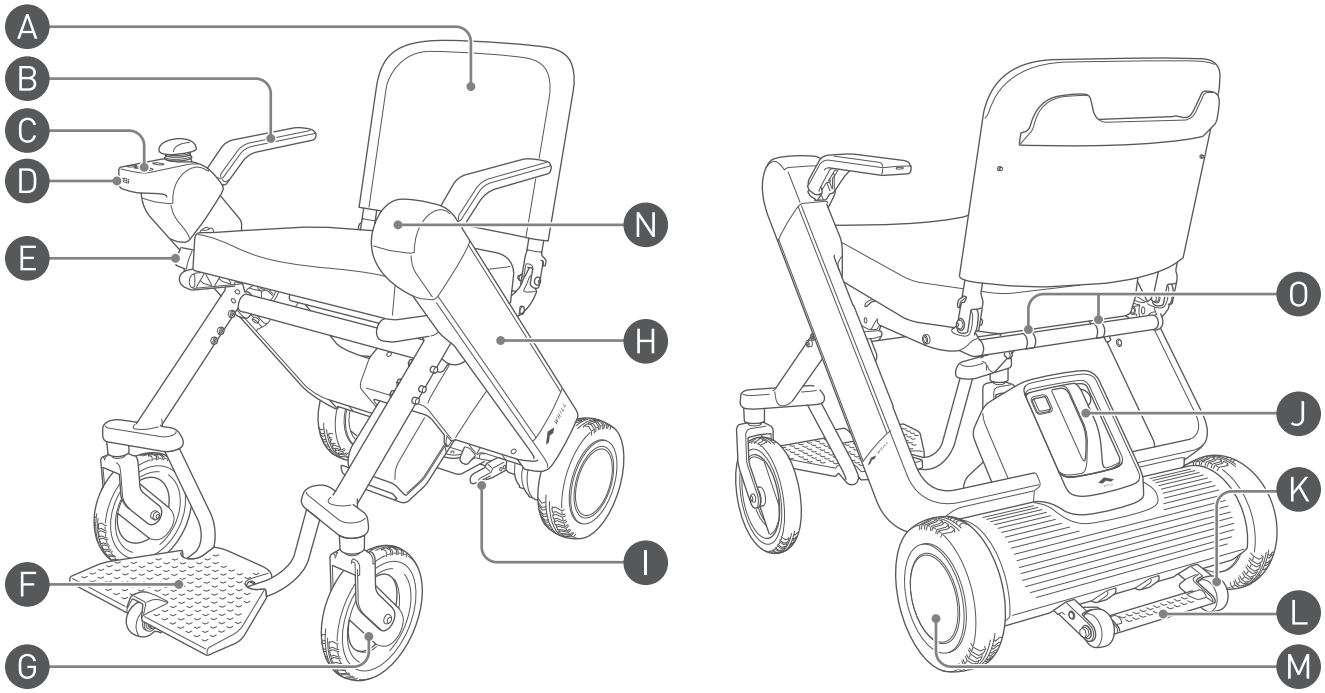

* The illustration shows the controller attached on the right side.

A Back support

B Arm rest

C Controller

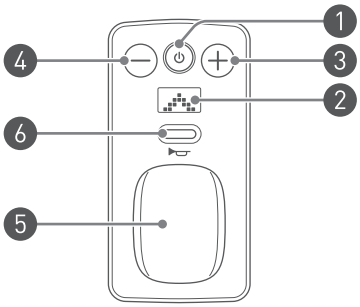

1 Power button
Turns on/off the device.

2 Display

3 Speed select button "+"
Increases the speed.

4 Speed select button "-"
Decreases the speed.

5 Joystick
Controls the forward, backward, left, and right movements.
The degree of joystick inclination can also control acceleration and deceleration.

6 Horn button
Sounds the alarm.

D Speaker

E Lock release button

Releases the lock when folding or unfolding the device.

F Foot rest

Supports the user's feet when the user is seated in the device.

G Front wheels

H Arm

I Brake release lever

Used to lock/unlock the brakes for the rear wheels.
This lever is located under the seat assembly.
There are two levers in total.

J Battery

For details, refer to "4.1. Battery and charger components" on page 58.

K Anti-tip roller

This prevents the device from tipping over backwards.

L Foot pedal

Secures the device when folding or unfolding the device.

M Rear wheels

N Hand rest

O Reflectors

Equipped with standard items depending on the areas/countries.

■ Charger

Used to charge the battery.
For details, refer to "4.1. Battery and charger components" on page 58.

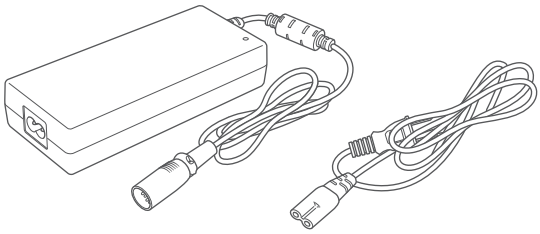

■ Device information

The device identification label is attached to the inside of the battery frame.

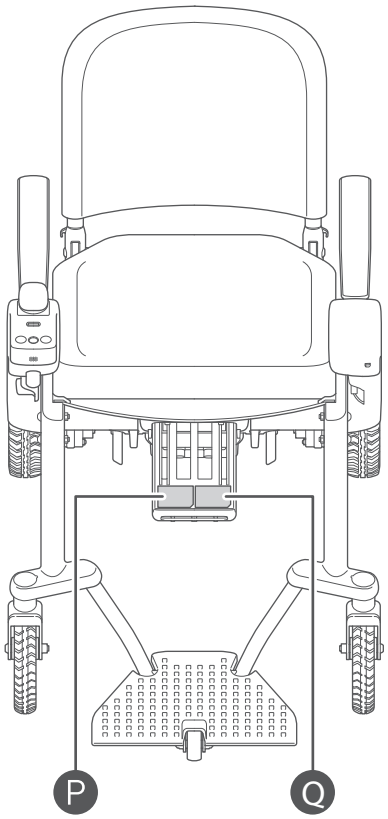

P Primary identification label

Indicates the serial number and UDI (Unique Device Identifier) of this device.
When contacting your dealer or customer support, check the serial number by referring to this label.

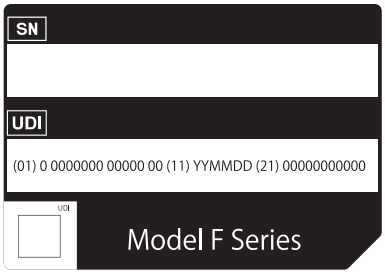

Q Manufacturer information label

Indicates the manufacturer and manufacturer's address.

* The label shown above is for reference only.

2.3. Accessories

Be sure to use only authentic accessories.

For the accessories that can be installed onto this device, contact your dealer or customer support.

Also visit the WHILL Website (https://whill.inc).

3. Assembly and adjustment

This section explains how to assemble the device, and how to adjust each component.

Assemble the device in the order described in this user manual.

⚠ WARNING

- **Take care not to drop the battery and charger when removing them from the box, or installing them on the device.**
  Otherwise, there is a risk of accidents such as injury or fire.
- **Perform adjustment on a flat and level surface with the battery removed and brakes locked.**
  There is a risk that the device may start moving, causing an accident.
- **Always place all parts back to their original positions after adjustment.**
  There is a risk of damage to the device if there is a missing component.

- **Assemble and adjust the device in the order described in this user manual. Do not perform any adjustment, repair, or modification that is not listed in this manual.**
  There is a risk of injury and product safety risk due to damage to the device or its parts.
  Performing repair or modification which is not listed in this manual will invalidate the warranty.
- **Do not perform assembly in a wet environment or if the device is wet.**
  There is a risk the device may become damaged and accidents may occur.
- **When removing the device from the box, firmly hold it and take care not to drop it or let it tip over.**
  There is a risk of injury to the user and damage to the device as a result of falling.

If you cannot perform assembly and adjustment by yourself, contact your dealer or customer support.

3.1. Names of parts

The following parts are packaged with this device.

- WHILL Model F (device)

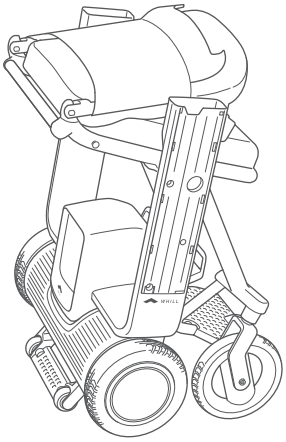

- Color plate

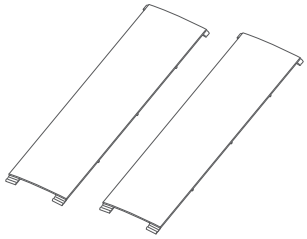

- Arm rest with controller

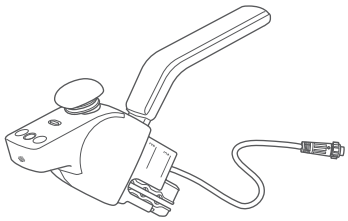

- Arm rest with hand rest

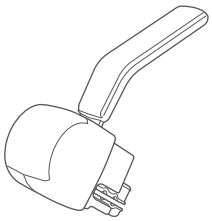

- Seat cushion

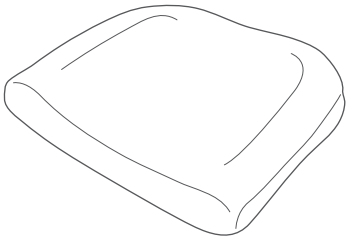

- Battery

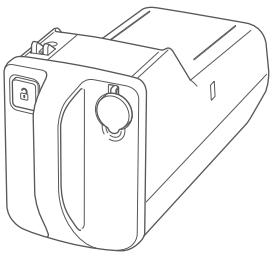

3.1.1. Before assembling the device

The following device adjustments can be made to meet the user's seating needs.

- Space between arm rests
- Height of arm rest
- Position of controller

Make adjustments in the order described here.

Unfold the device.

3.2.1. Unfolding the device

↓

Install the color plate

3.2.2. Installing the color plate

↓

Install the arm rests.

3.2.3. About installing the arm rests

3.2.4. Installing the arm rests

Before installing, select the space between arm rests and the position of the controller.

		Space between arm rests	
		Standard	Wide
Position of controller	Right side	"Installation pattern 1" on page 31	"Installation pattern 2" on page 32
	Left side	"Installation pattern 3" on page 37	"Installation pattern 4" on page 42

↓

Adjust the height of the arm rests

3.2.5. Adjusting the height of the arm rest

↓

Connect the controller cable.

3.2.6. Connecting the cable

↓

Install the seat cushion onto the seat assembly.

3.2.7. Installing the seat cushion onto the seat

↓

Install the battery.

3.2.8. Installing the battery

3.2. Assembly procedures

Assembly of the device does not require tools. When assembling the device, pay close attention to the following.

⚠ WARNING

- **Perform assembly or adjustment on a flat and level surface with the battery removed and brakes locked.**
  Otherwise, there is a risk of accident.

- **Do not touch the metal terminals of the connectors, allow them to become wet, or bring any metal or other foreign objects close to them. Ensure that there are no foreign objects when assembling.**
  Otherwise, there is a risk of injury and of damage to the device or its parts.

⚠ CAUTION

- **When assembling or adjusting the device, grab only the handle and part as described in this manual, and do not hold the device by any other areas.**
  There is a risk of hand injury if it gets caught in the device.

- **Pay attention to the following and perform adjustment in order to ensure safe use.**
  Otherwise, there is a risk of accident.
  - Adjust the seating of the device to fit the user's body before use.
  - Be careful to re-tighten all of the adjusting bolts after assembly or adjustments.
  - Do not assemble or make adjustments while on the device.

- **When installing and removing arm rests and other parts on the device, take care not to apply unnecessary force.**
  There is a risk of injury to the user and damage to parts.

- **When installing the arm rests or moving the arms up or down during height adjustment, be careful that your fingers do not become caught.**
  There is a risk of injury.

- **Do not throw, step on, drop the controller, or immerse it in water.**
  There is a risk that the controller may be damaged from strong impact, rendering the device inoperable.

- **Do not press forcefully, scratch or touch the controller display with dirty hands.**
  There is a risk that the display may become damaged or illegible.

- **Do not disassemble the controller.**
  Doing so may cause the controller to malfunction.

3.2.1. Unfolding the device

When unfolding the device, follow the procedure below with the battery already removed.

1. **Fix the device in place while supporting the foot pedal.**

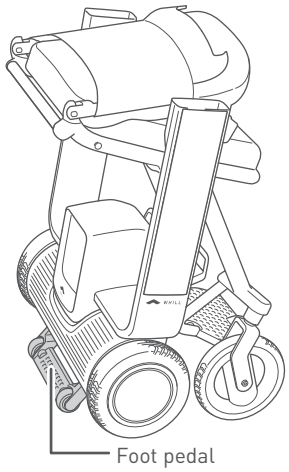

2. **Lightly pull the seat frame pipe (seat pipe) upwards.**

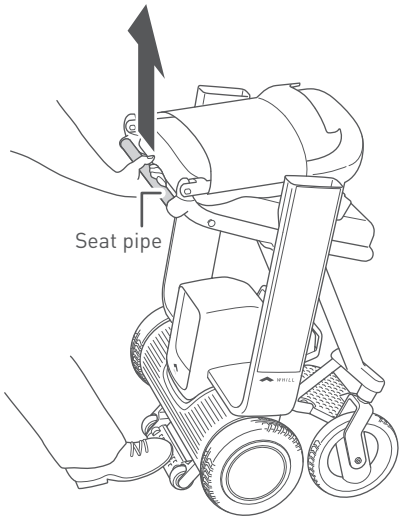

3. **With the seat pipe pulled upwards, press the lock release button.**

To prevent malfunctioning of the lock release button, the lock release button has been designed so that it can be pushed in only when the seat pipe is pulled upwards.

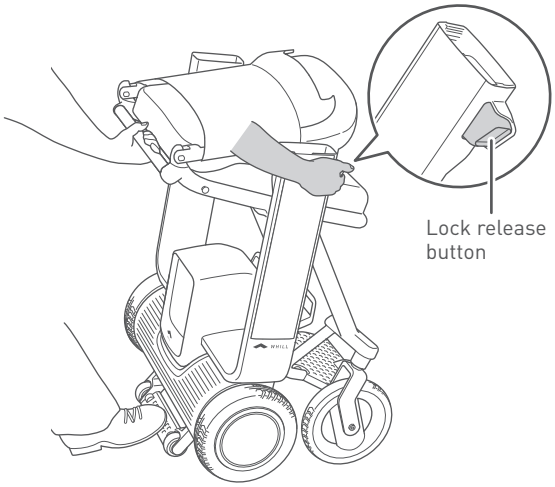

4. **Lower the seat pipe, and when the device begins to unfold, take your hand away from the lock release button.**
Open the device to the position where you hear a click sound.

Warning

Inserting a finger or other body part into the connecting components and moving parts of this device may result in an injury.
When assembling, adjusting, and transporting this device, do not touch any component other than those indicated in the manual.

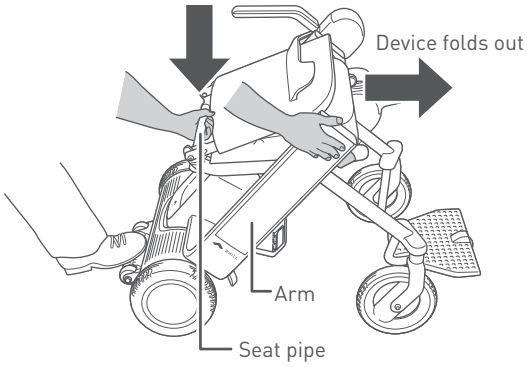

5. **Tilt the back support backward.**

Warning

Inserting a finger or other body part into the connecting components and moving parts of this device may result in an injury.
When assembling, adjusting, and transporting this device, do not touch any component other than those indicated in the manual.

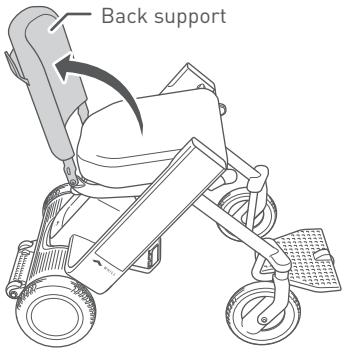

3.2.2. Installing the color plate

1. Fit the tabs (4 of each) at the corners of the color plate into the mounting holes on the arm.

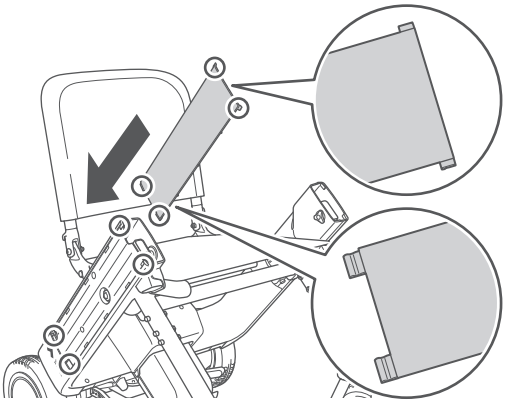

2. Push the tabs at the sides of the color plate into the mounting holes (6 of each) on the arm to fix the arm in place.

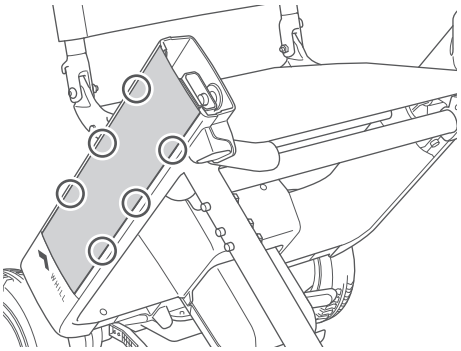

3. Install the color plate on the opposite side in the same way.

3.2.3. About installing the arm rests

The space between arm rests and the position of the controller can be selected to meet the user's seating needs.

For the required specifications, refer to the following items.

		Space between arm rests	
		Standard	Wide
Position of controller	Right side	"Installation pattern 1" on page 31	"Installation pattern 2" on page 32
	Left side	"Installation pattern 3" on page 37	"Installation pattern 4" on page 42

■ Space between arm rests

Two settings "Standard" and "Wide" can be selected for the space between arm rests.

The figures below introduce an example where the controller is installed on the right arm.

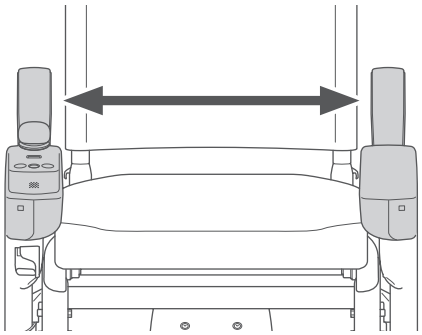

Standard: Controller facing inwards
(inside width 430 mm)

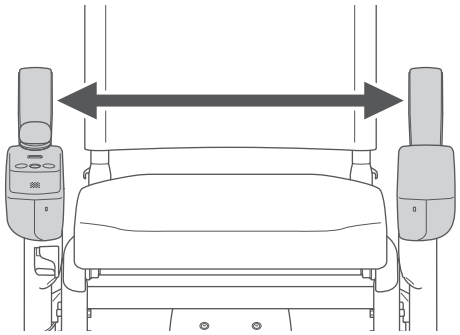

Wide: Controller facing outwards
(inside width 480 mm)

■ Position of controller

The controller can be installed on the left side or the right side.

When installing or removing the controller, be careful that your fingers do not become caught.

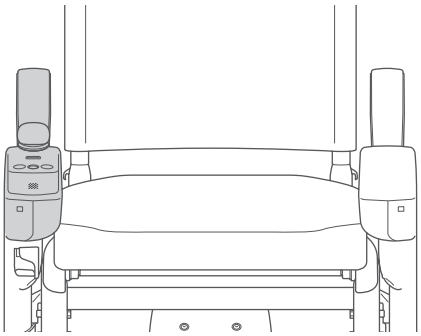

Right side

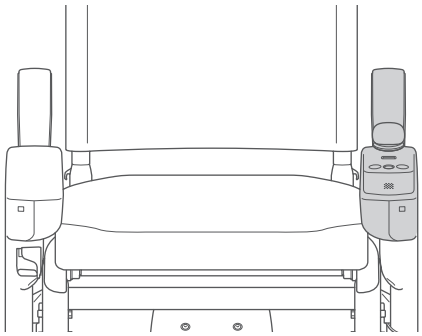

Left side

* Figures show "Standard" space between arm rests

⚠ CAUTION

- **When installing the arm rests, be careful that your fingers do not become caught.**
  There is a risk of injury.

⚠ CAUTION

- **Do not throw, step on, or drop the controller, apply strong impact to it by, for example, pulling the joystick, or immerse it in water.**
  There is a risk that the controller may be damaged from strong impact, rendering the device inoperable.
- **Do not press forcefully, scratch or touch the controller display or switches with dirty hands.**
  There is a risk that the display or switches may become damaged or illegible.
- **Do not disassemble the controller.**
  Doing so may cause the controller to malfunction.

3.2.4. Installing the arm rests

■ Installation pattern 1

The following explanation is for when the product is used at the following specifications.

Position of controller	Space between arm rests
Right side	Standard

1. Pass the cable from the arm rest with controller through the threading holes on the right side of the device.

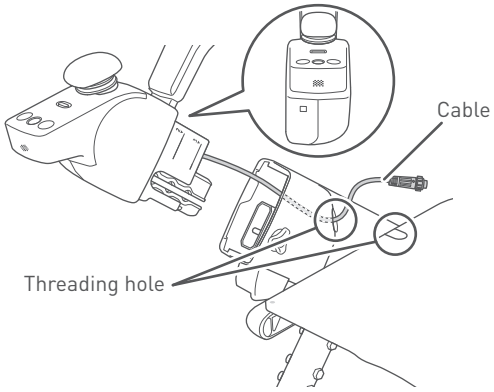

2. Install the arm rest with controller onto the right side of the device.

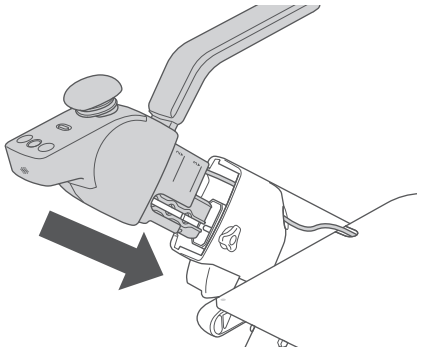

3. Install the arm rest with hand rest onto the left side of the device.

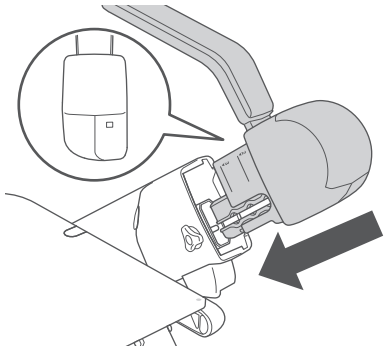

■ Installation pattern 2

The following explanation is for when the product is used at the following specifications.

Position of controller	Space between arm rests
Right side	Wide

3

1. **Remove the cover from the arm rest with controller.**
   1. Press the location shown by the arrow in the figure to remove the two tabs, and separate the left and right covers.
   2. Remove the cover.

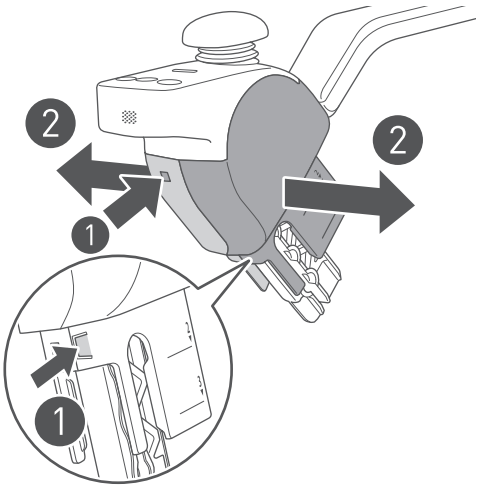

2. **Disconnect the cable attached to the inside of the cover.**

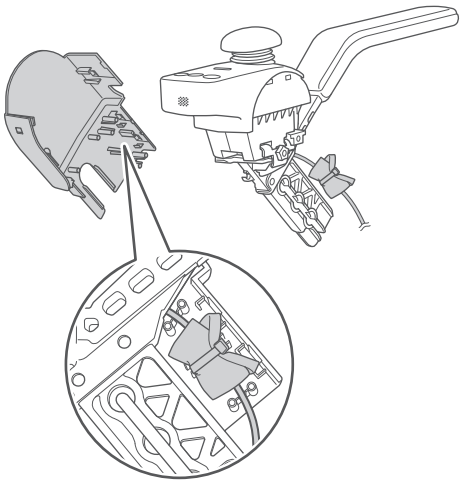

3. **Remove the controller from the arm rest with controller.**
   1. Turn the screw to remove together with the fixture.
   2. Remove the controller by sliding it in the direction of the arrow.

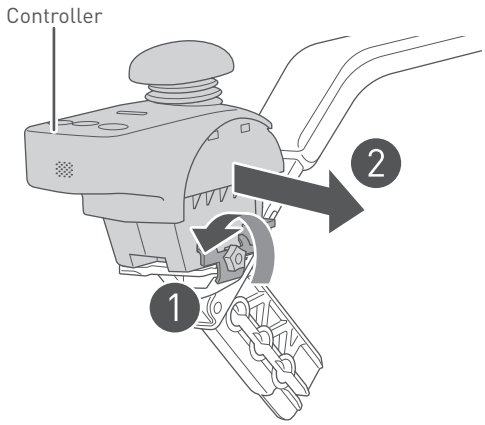

> Do not pull it forcefully. There is a risk of breaking the cable that is connected to it.

4. **Remove the cover from the arm rest with hand rest.**
   1. Press the location shown by the arrow in the figure to remove the two tabs, and separate the left and right covers.
   2. Remove the cover.

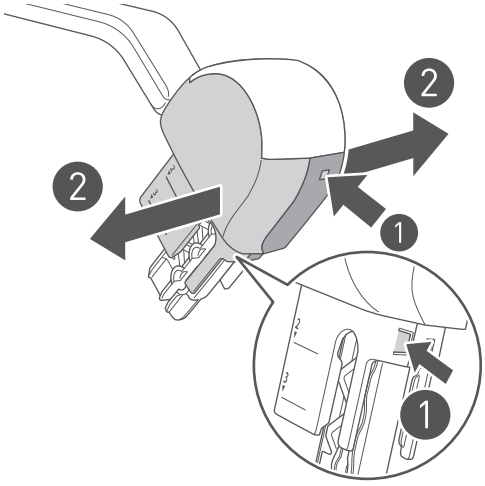

5. **Remove the hand rest of the arm rest with hand rest.**
   1. Turn the screw to remove together with the fixture.
   2. Remove the hand rest by sliding it in the direction of the arrow.

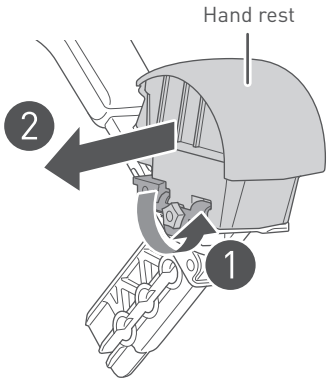

6. **Install the hand rest removed in step 5 to the arm rest on the opposite side.**

1. Insert the grooved part of the hand rest to the projection on the arm rest, then slide the hand rest of the arm rest.
2. Install the screw and fixture removed in step 3, and tighten the screw to fix the hand rest.

> Try to move the hand rest of the arm rest with hand rest up, down, left, and right, and check that they are locked in place.

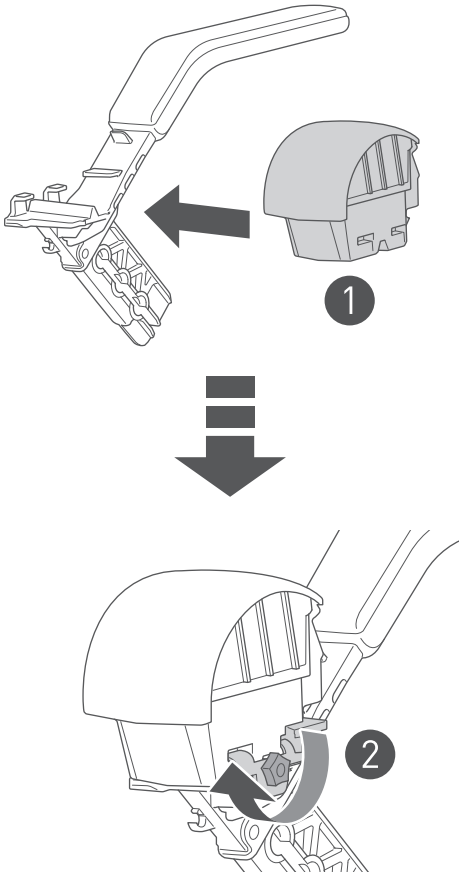

7. **Install the cover removed in step 1 onto the arm rest on the side installed with the hand rest.**

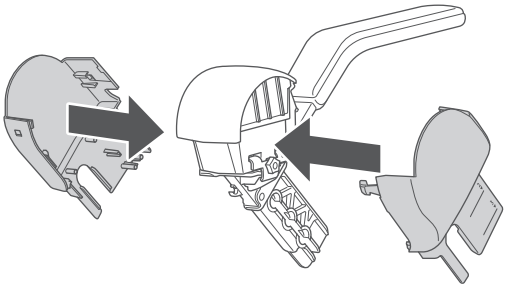

8. **Install the controller removed in step 3 to the arm rest on the opposite side.**
   1. Insert the grooved part of the controller to the projection on the arm rest, then slide the controller.
   2. Install the screw and fixture removed in step 5, and tighten the screw to fix the controller.

> Try to move the installed controller up, down, left, and right, and check it they are locked in place.

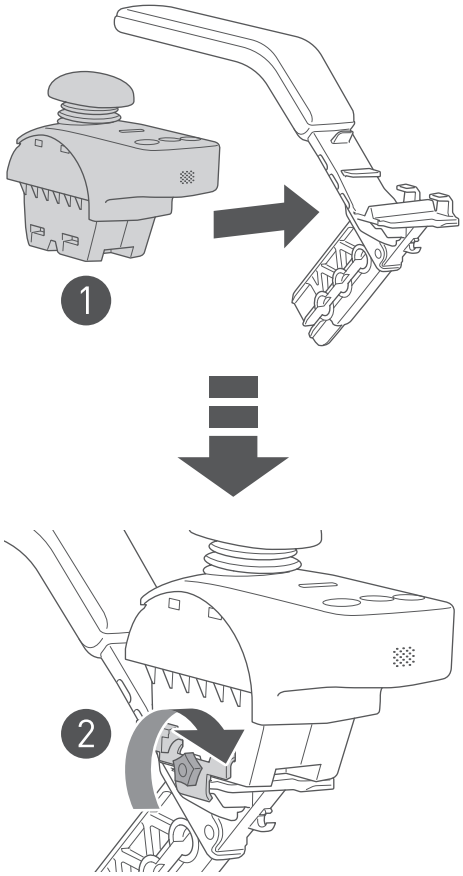

9. **Connect the cable disconnected in step 2 to the outer side cover removed in step 4.**

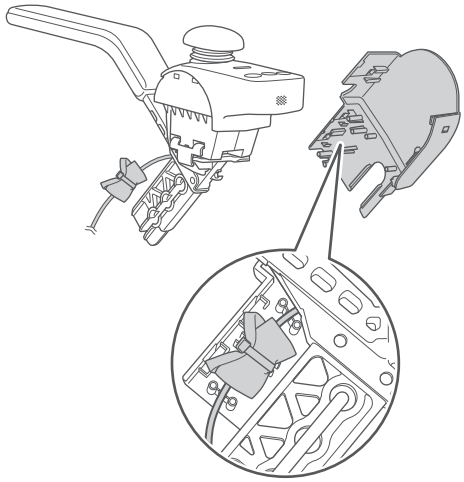

10. **Install the cover removed in step 4 to the arm rest with controller.**

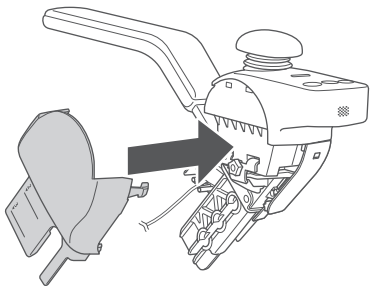

11. Pass the cable from the arm rest with controller assembled in step 10 through the threading holes on the right side of the device.

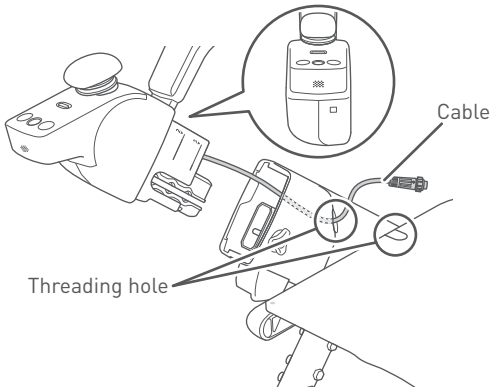

12. Install the arm rest with controller assembled in step 10 to the right side of the device.

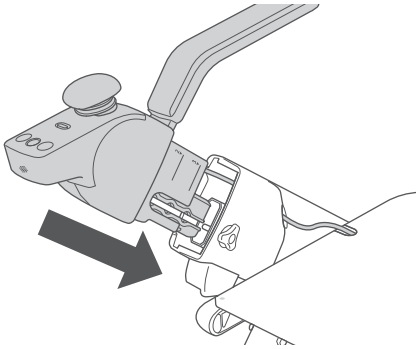

13. Install the arm rest with hand rest assembled in step 7 to the left side of the device.

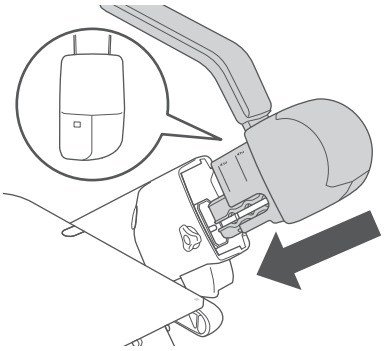

Installation pattern 3

The following explanation is for when the product is used at the following specifications.

Position of controller	Space between arm rests
Left side	Standard

1. **Remove the cover from the arm rest with controller.**
   1. Press the location shown by the arrow in the figure to remove the two tabs, and separate the left and right covers.
   2. Remove the cover.

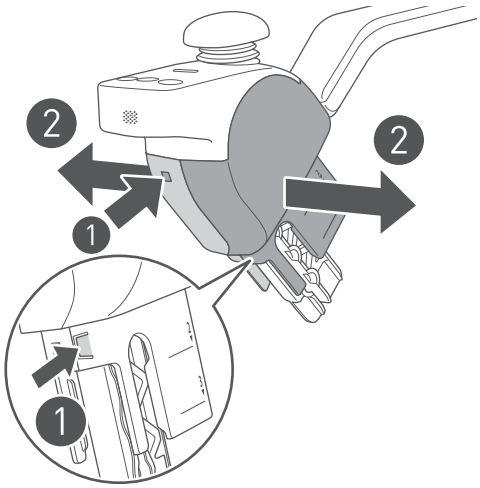

2. **Disconnect the cable attached to the inside of the cover.**

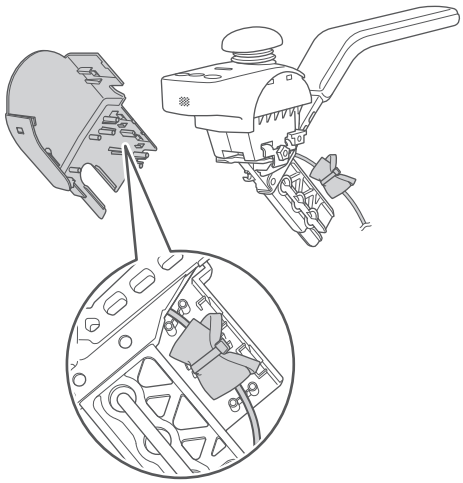

3. **Remove the controller from the arm rest with controller.**

1. Turn the screw to remove together with the fixture.
2. Remove the controller by sliding it in the direction of the arrow.

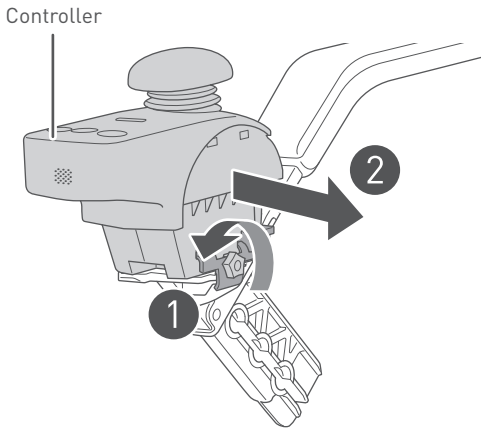

> Do not pull it forcefully. There is a risk of breaking the cable that is connected to it.

3

4. **Remove the cover from the arm rest with hand rest.**

1. Press the location shown by the arrow in the figure to remove the two tabs, and separate the left and right covers.
2. Remove the cover.

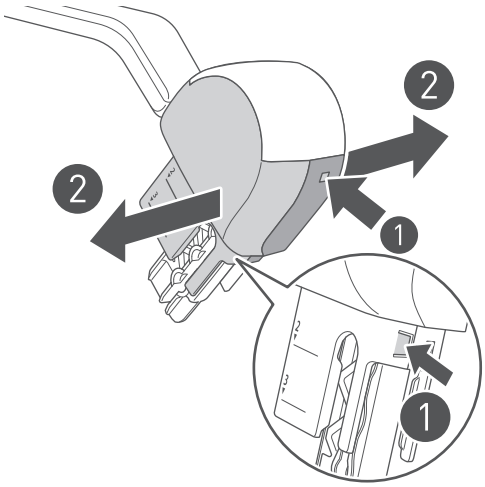

5. **Remove the hand rest of the arm rest with hand rest.**

1. Turn the screw to remove together with the fixture.
2. Remove the hand rest by sliding it outward.

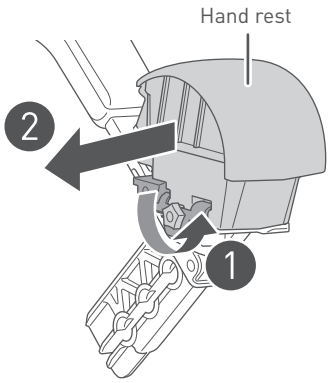

6. Install the hand rest removed in step 5 to the arm rest on the opposite side.

1. Insert the grooved part of the hand rest to the projection on the arm rest, then slide the hand rest of the arm rest.
2. Install the screw and fixture removed in step 3, and tighten the screw to fix the hand rest.

> Try to move the hand rest of the arm rest with hand rest up, down, left, and right, and check that they are locked in place.

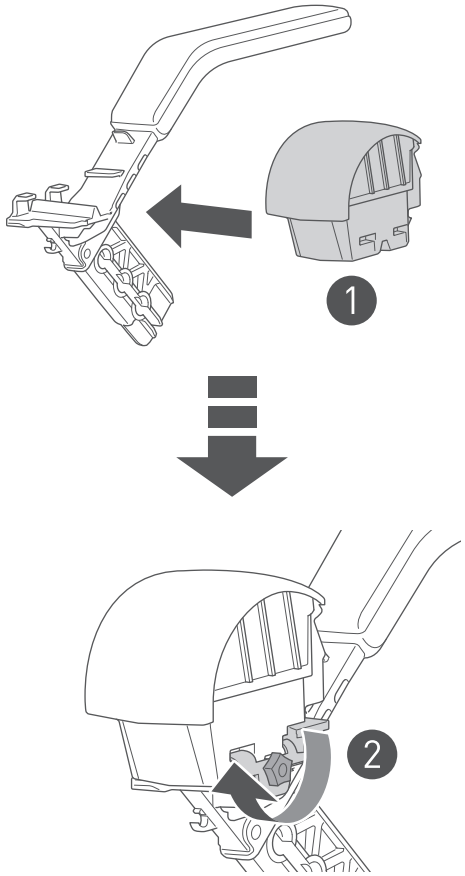

7. Install the cover removed in step 1 onto the arm rest on the side installed with the hand rest.

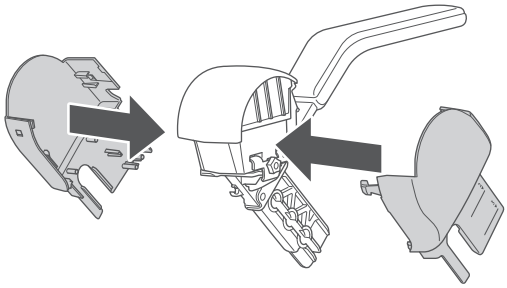

8. **Install the controller removed in step 3 to the arm rest on the opposite side.**

1. Insert the grooved part of the controller to the projection on the arm rest, then slide the controller.
2. Install the screw and fixture removed in step 5, and tighten the screw to fix the controller.

> Try to move the installed controller up, down, left, and right, and check it they are locked in place.

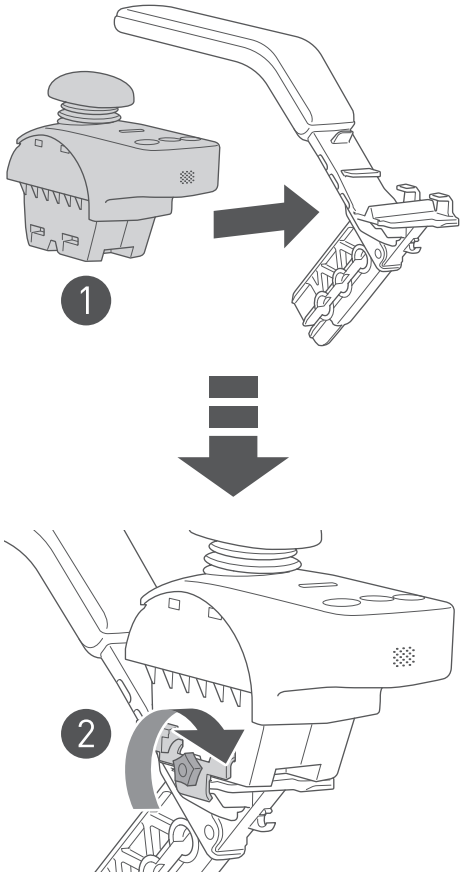

9. **Connect the cable disconnected in step 2 to the inside of the cover removed in step 4.**

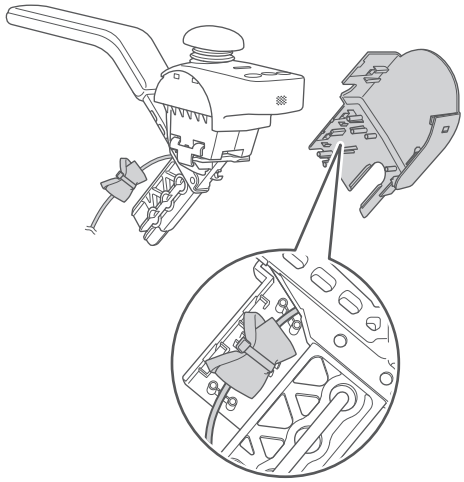

10. **Install the cover removed in step 4 onto the arm rest on the side installed with the controller.**

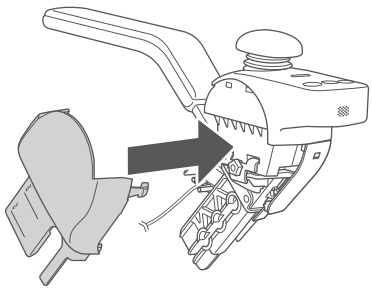

11. Pass the cable from the arm rest with controller assembled in step 10 through the threading holes on the left side of the device.

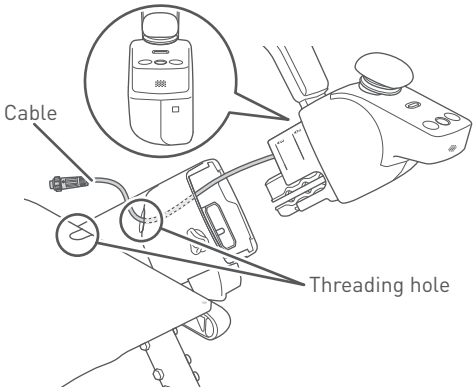

12. Install the arm rest with controller assembled in step 10 to the left side of the device.

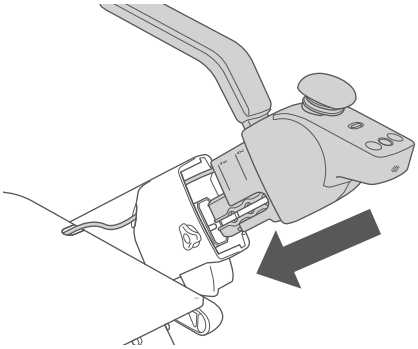

13. Install the arm rest with hand rest assembled in step 7 to the right side of the device.

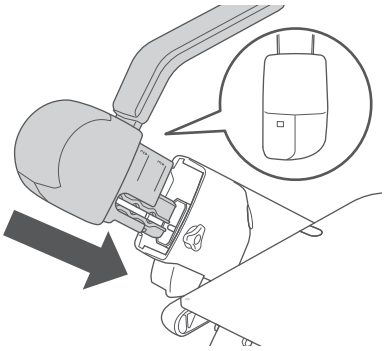

Installation pattern 4

The following explanation is for when the product is used at the following specifications.

Position of controller	Space between arm rests
Left side	Wide

3

1. Pass the cable from the arm rest with controller through the threading holes on the left side of the device.

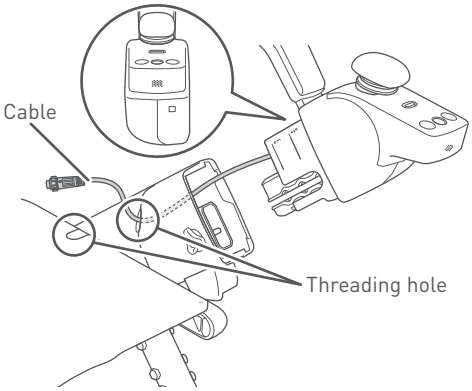

2. Install the arm rest with controller onto the left side of the device.

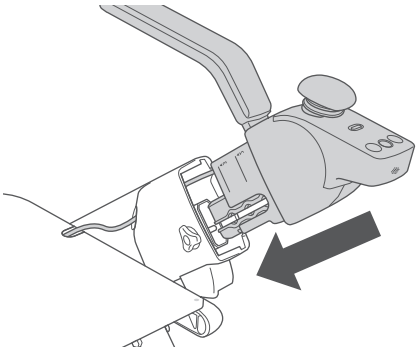

3. Install the arm rest with hand rest onto the right side of the device.

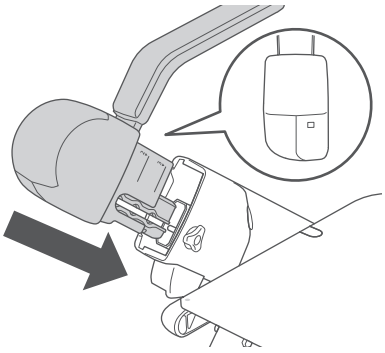

3.2.5. Adjusting the height of the arm rest

⚠ CAUTION

- **When moving the arm up or down, be careful that your fingers do not become caught.**
  There is a risk of injury.

This following procedure introduces an example where the controller is installed on the right arm.

1. **Change and adjust the locking position of the arm rest to the desired height.**
   Set the position so that the scale on the arm rest is aligned with the upper end of the arm.

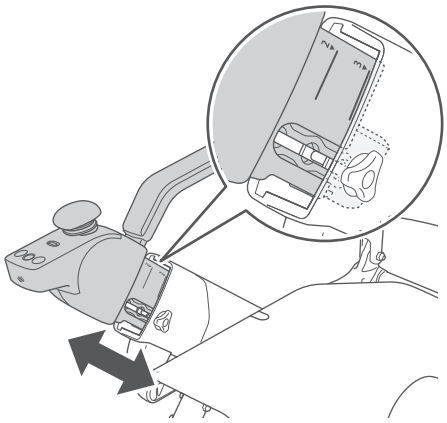

The height of the arm rest can be adjusted in 3 stages.

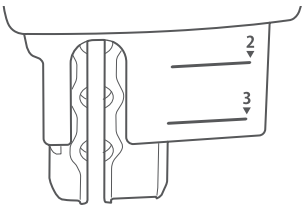

2. **Tighten the arm rest adjustment screw, and fix the arm rest in place.**

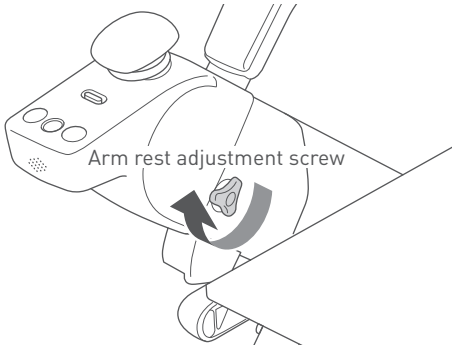

- After adjustment is completed, try to slide the arm rest up and down to confirm that it is locked in place and does not slide.
- If rattling of the arm rest bothers you, further tighten the arm rest adjustment screw with a Phillips screwdriver.

3. **Adjust the height of the arm rest on the opposite side in the same way.**

3.2.6. Connecting the cable

1. **Connect the cable.**
   Connect by passing the cable through the cable holding bands under the seat.

When the controller is installed on the left arm, the wiring method changes.

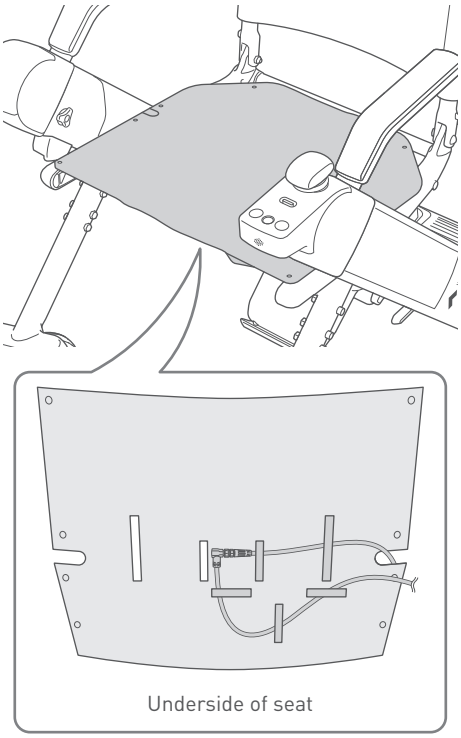

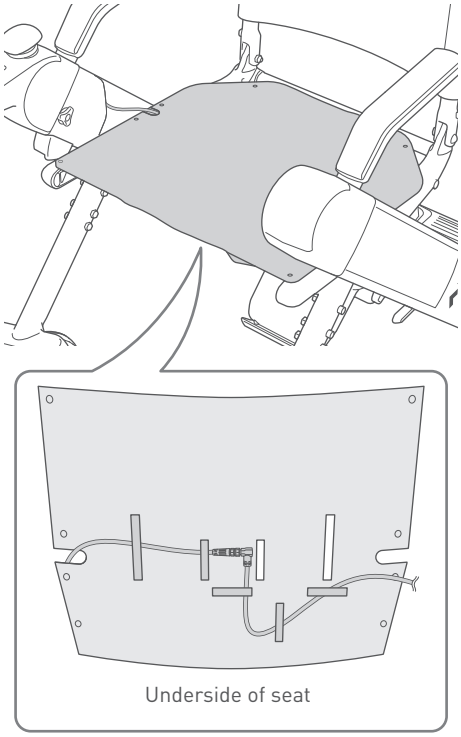

* The illustration shows wiring when the controller is attached on the right side.

2. **Connect the connector of the cable.**
   Confirm the internal design of the cable connectors to align them properly so that their ends fit together, and insert the inner metal pins straight into the hole. Slide the lock at the base of the L-shaped cable connector and turn it counterclockwise to secure it in place.

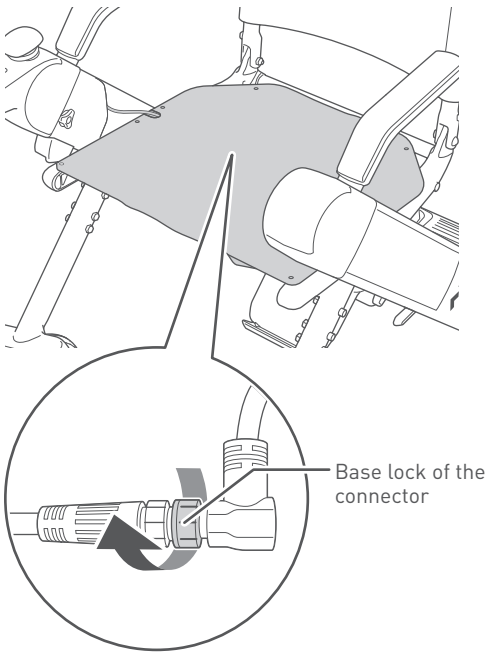

3.2.7. Installing the seat cushion onto the seat

1. **Place the seat cushion on the seat. Hook-and-loop fasteners are included to help secure the cushion to the chair. Please ensure the hook-and-loop fasters are firmly attached to the bottom of the cushion and the seat, and are properly aligned with each other when placing the seat cushion on the seat.**

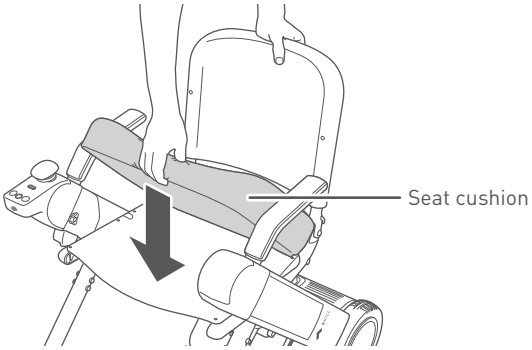

Place so that side with round corners is at the rear.

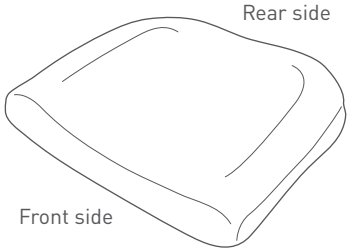

3.2.8. Installing the battery

⚠ CAUTION

- **The battery and charger are for the WHILL Model F only. Do not charge the battery by using a charger other than the charger included with the device or charge other batteries with the charger included with the device.**
  There is a risk of malfunctions.

- **Do not touch the connectors directly, allow them to become wet, or bring any metal or other foreign objects close to them. Ensure that there are no foreign objects when assembling.**
  Otherwise, there is a risk of injury and of damage to the device or its parts.

3

If the device does not start properly even though the charged battery is inserted to the device and the device is turned on after five seconds have elapsed, remove the battery, then attach the battery again after 10 seconds.
If the device cannot be used even though the battery is inserted/removed several times, a malfunction may have occurred. Please contact your dealer or customer support.

1. **Ensure that the battery lock release button is not pressed.**

2. **Grab the battery handle and insert the battery into the battery compartment.**

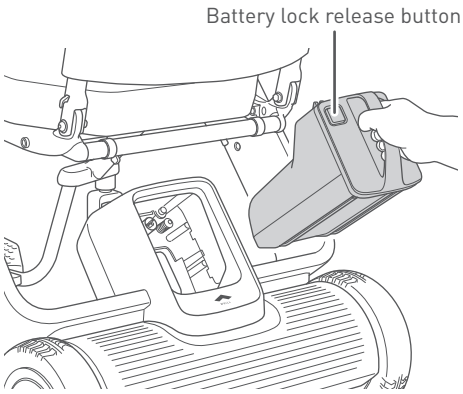

- Charge the battery before using WHILL Model F for the first time.
  For the battery charging procedure, refer to “4.2. Charging procedure”.
- The battery weighs 6.0 lb (2.7 kg). Handle the battery with care – dropping it will increase a risk of injury and damage to the battery. Otherwise, there is a risk of injury and damage to the battery.

3. **Insert the battery straight and press it until it clicks. When it is difficult to insert the battery, push it from the front with force.**
   If the battery does not easily set in place, the cap may be attached on the battery connector or there may be a foreign object inside the compartment.
   Shine a light inside the compartment and check.
   If there is a foreign object, make sure to remove it with a small brush, etc. before trying again.

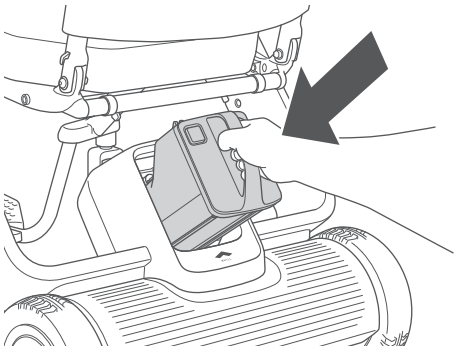

3.3. Adjustment procedures

The following device adjustments can be made to meet the user's seating needs.

- **Height of arm rest:****"3.3.1. Adjusting the height of the arm rest" on page 48**
- **Space between arm rests:****"3.3.2. Changing the space between arm rests" on page 50**
- **Switching the left and right sides of the controller:** **"3.3.3. Switching the position of the controller" on page 53**

⚠ WARNING

- **Perform adjustments on a flat and level surface with the battery removed and brakes locked.**
  Otherwise, there is a risk of accident.
- **Do not touch the metal terminals of the connectors, allow them to become wet, or bring any metal or other foreign objects close to them. Ensure that there are no foreign objects when assembling.**
  Otherwise, there is a risk of injury and of damage to the device or its parts.

⚠ CAUTION

- **When adjusting the device, grab only the handle and part as described in this manual, and do not hold the device by any other areas.**
  There is a risk of hand injury if it gets caught in the device.
- **Pay attention to the following and perform adjustment in order to ensure safe use.**
  Otherwise, there is a risk of accident.
  - Adjust the seating of the device to fit the user's body before use.
  - Be careful to re-tighten all of the adjusting bolts after adjustments.
  - Do not make adjustments while on the device.
- **When installing and removing arm rests and other parts on the device, take care not to apply unnecessary force.**
  There is a risk of injury to the user and damage to parts.
- **When installing the arm rests or moving the arms up or down during height adjustment, be careful that your fingers do not become caught.**
  There is a risk of injury.

- **Do not throw, step on, drop the controller, or immerse it in water.**
  There is a risk that the controller may be damaged from strong impact, rendering the device inoperable.
- **Do not press forcefully, scratch or touch the controller display with dirty hands.**
  There is a risk that the display may become damaged or illegible.
- **Do not disassemble the controller.**
  Doing so may cause the controller to malfunction.
- **Do not shake the controller.**
  Doing so may cause the controller to malfunction.

3.3.1. Adjusting the height of the arm rest

This following procedure introduces an example where the controller is installed on the right arm.

1. **Remove the battery.**
   For the removal procedure, refer to "4.1.1. Removing the battery" on page 59.

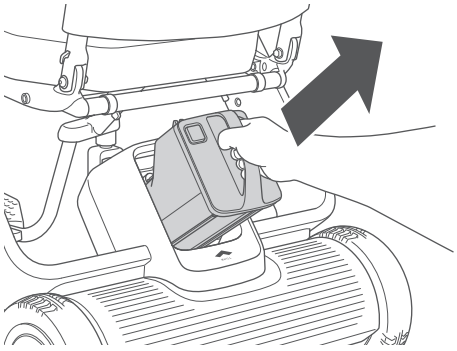

2. **Loosen the arm rest adjustment screw.**

   To loosen a re-tightened screw, use a Phillips screwdriver.

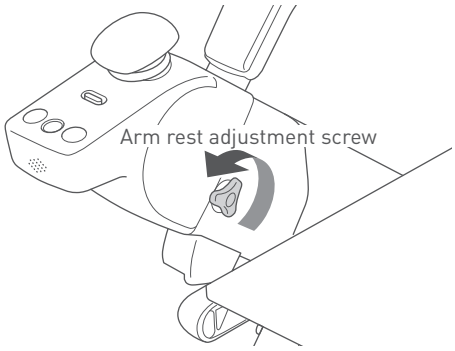

3. **Change and adjust the locking position of the arm rest to the desired height.**
   Set the position so that the scale on the arm rest is aligned with the upper end of the arm.

   The height of the arm rest can be adjusted in 3 stages.

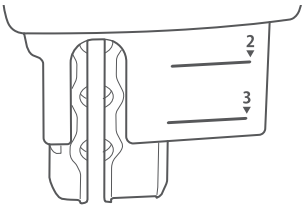

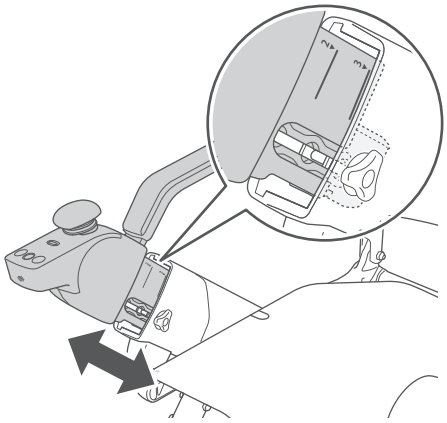

4. **Tighten the arm rest adjustment screw loosened in step 2, and fix the arm resist in place.**

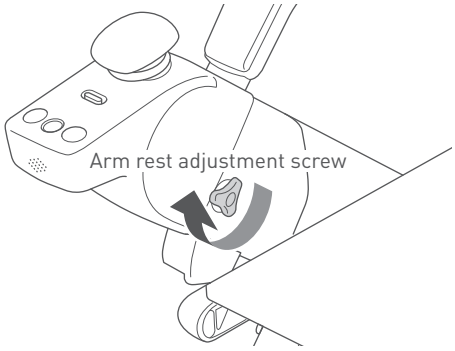

- After adjustment is completed, try to slide the arm rest up and down to confirm that it is locked in place and does not slide.
- If rattling of the arm rest bothers you, further tighten the arm rest adjustment screw with a Phillips screwdriver.

5. **Adjust the height of the arm rest on the opposite side in the same way.**

6. **Install the battery.**
   For the installation procedure, refer to "3.2.8. Installing the battery" on page 46.

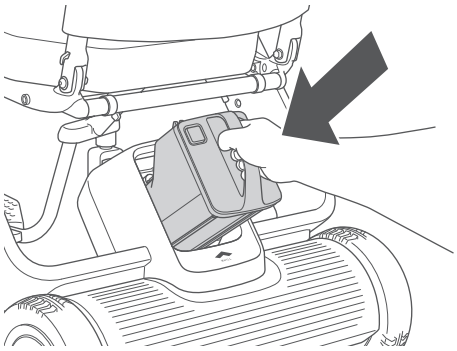

3.3.2. Changing the space between arm rests

The space between arm rests can be widened by altering the installation method.

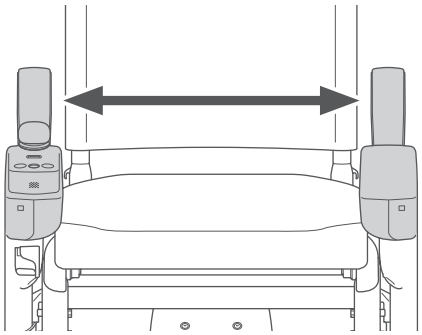

Standard: Controller facing inwards
(inside width 430 mm)

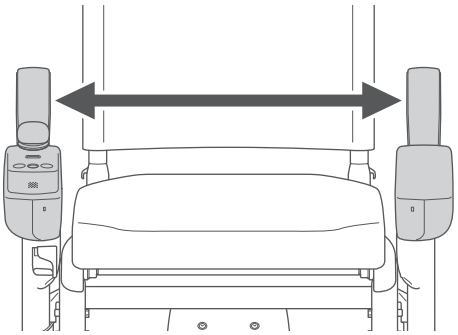

Wide: Controller facing outwards
(inside width 480 mm)

1. **Remove the battery.**
   For the removal procedure, refer to "4.1.1. Removing the battery" on page 59.

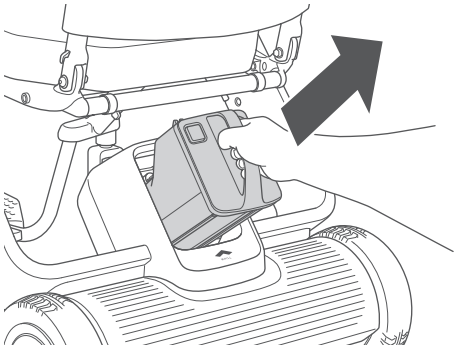

2. **Remove the seat cushion from the seat.**

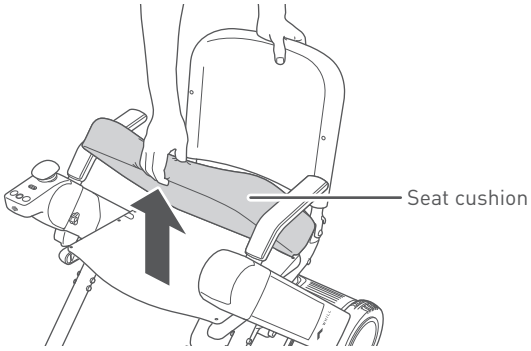

3. **Disconnect the cable connector under the seat.**

> ℹ
> - When disconnecting the connector, hold and rotate the base lock of the connector. Do not rotate other parts of the connector.
> - When disconnecting the connector, do not pull forcefully. There is a risk of breaking the cables.

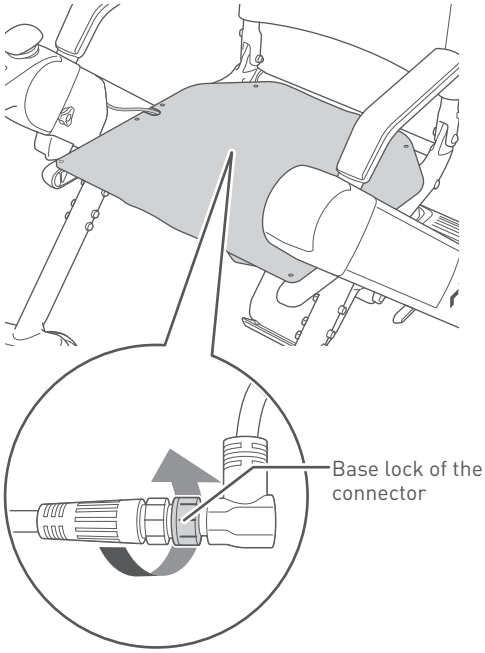

4. **Loosen the arm rest adjustment screw.**

> ℹ
> To loosen a re-tightened screw, use a Phillips screwdriver.

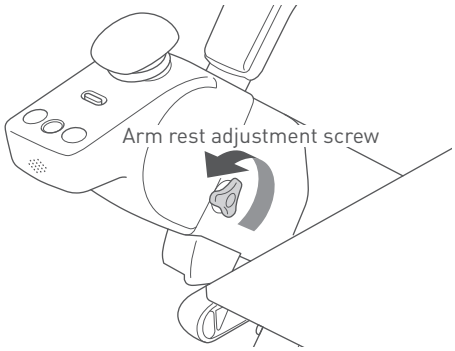

5. **Remove the arm rest.**

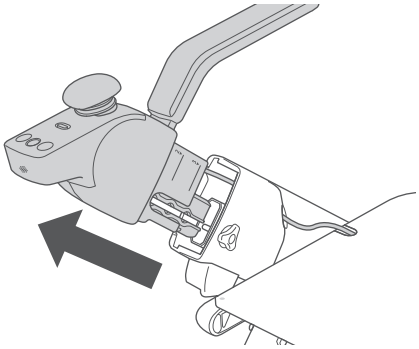

6. **Remove the arm rest on the opposite side in the same way.**

7. **Remove the controller and hand rest from the arm rest.**
   For the removal procedure, refer to Steps 1 to 5 in "3.2.4. Installing the arm rests" "■Installation pattern 2" (on page 32).

8. **Install the controller to the arm rest on the opposite side. Likewise, install the hand rest removed to the arm rest on the opposite side.**

   For the installation procedure, refer to Steps 6 to 10 in "3.2.4. Installing the arm rests" "■Installation pattern 2" (on page 32).

9. **Install each of the arm rests on the device.**

   For the installation procedure, refer to Steps 11 to 13 in "3.2.4. Installing the arm rests" "■Installation pattern 2" (on page 32).

10. **Tighten the arm rest adjustment screw, and fix the arm rest in place.**

11. **Connect the cable.**

    For details on how to connect the cable, refer to "3.2.6. Connecting the cable" on page 44.

12. **Install the battery.**

    For the installation procedure, refer to "3.2.8. Installing the battery" on page 46.

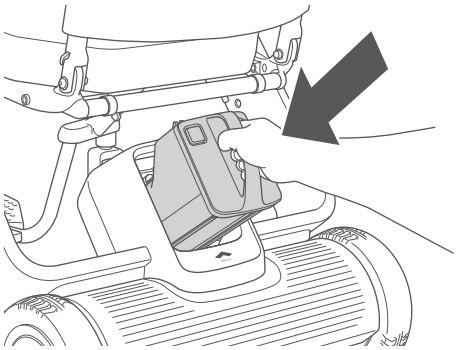

13. **Turn on the power and check that the device moves forward, backward, left, and right without problems.**

> If an error appears on the display, check "10. Troubleshooting" on page 108. If the issue persists, contact your dealer or customer support.

3.3.3. Switching the position of the controller

The controller can be installed on the right or left arm.

This following procedure introduces an example where the position of the controller installed on the arm on the right side of the device is changed to the left side of the device.

1. **Remove the battery.**
   For the removal procedure, refer to "4.1.1. Removing the battery" on page 59.

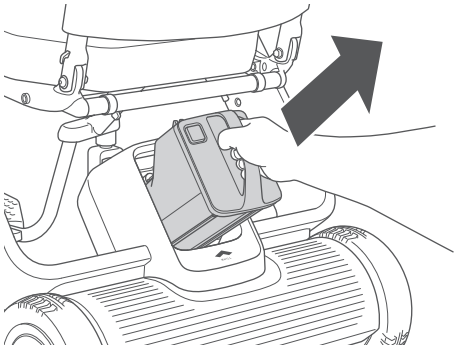

2. **Remove the seat cushion from the seat.**

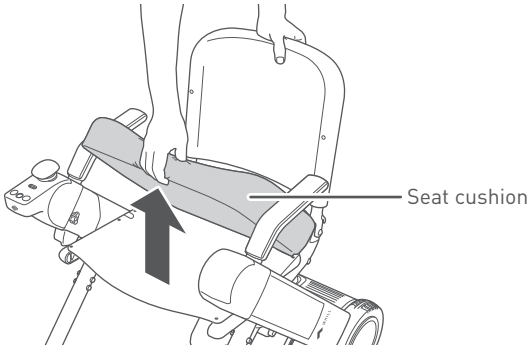

3. **Disconnect the cable connector under the seat.**

- When disconnecting the connector, hold and rotate the base lock of the connector. Do not rotate other parts of the connector.
- When disconnecting the connector, do not pull forcefully. There is a risk of breaking the cables.

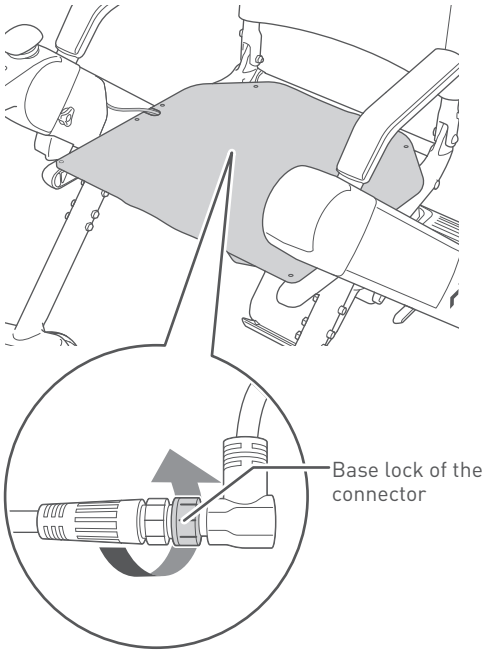

4. **Remove the arm rests on both sides.**
   For the arm rest removal procedure, refer to steps 3 to 6 in "3.3.2. Changing the space between arm rests" on page 50.

5. **Switch the controller.**
   For details on how to switch the controller, refer to "3.2.4. Installing the arm rests" "■Installation pattern 2" (on page 32).

6. **Install the arm rests on both sides.**
   For details on adjusting the height of the arm rests, refer to "3.2.5. Adjusting the height of the arm rest" on page 43.

7. **Connect the cable.**
   For details on how to connect the cable, refer to "3.2.6. Connecting the cable" on page 44.

8. **Install the battery.**
   For the installation procedure, refer to "3.2.8. Installing the battery" on page 46.

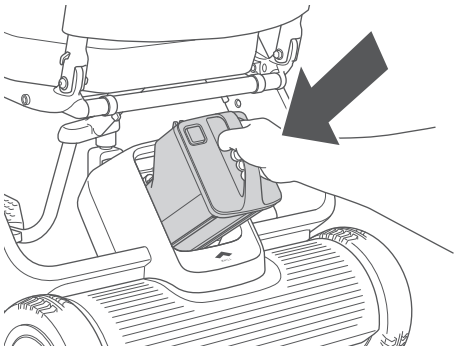

9. **Turn on the power and check that the device moves forward, backward, left, and right without problems.**

> If an error appears on the display, check "10. Troubleshooting" on page 108. If the issue persists, contact your dealer or customer support.

4. Charging the battery

Charge the battery before using WHILL Model F for the first time.

Ensure the battery is charged before use if the device has not been used for a long period of time.

The maximum driving range of this device (12.4 miles (20 km)) was measured under ideal conditions; however, the actual range may vary depending on the driving conditions such as hills, curves, steps, terrain, driving habits, load, and temperature. If the device is going to be driven for an extended period of time or a longer distance, we recommend the following:

- Fully charge the battery before use.
- Keep weight of storage items to a minimum.
- Plan your route to avoid hills and obstacles.
- Maintain consistent speed and avoid sudden and frequent stops.

⚠ WARNING

- **Carefully read the explanations in this manual regarding the battery and charger, and follow the instructions.**
  There is a risk of fire or battery explosion when disassembling the battery or charger. Do not allow flames near the battery or charger, avoid getting the battery and charger wet or subjecting them to impact (dropping, penetration with nails, or standing on them), etc.
- **Device battery should be charged in a well-ventilated space that is free of flammable gases and that is at least twice the size of the device.**
  There is a risk of explosion or other accidents if the space is filled with flammable gas or if ventilation is insufficient.
- **If the battery has external damage or you notice an abnormality in its functioning, immediately discontinue use or charging, and contact your dealer.**
  There is a risk of electric shock, short circuit, and fire.

- **Never attempt to disassemble the battery or charger.**
  There is a risk of explosion.
- **Never touch the device connectors.**
  There is a risk of serious injury or electric shock. Doing so will also void the device warranty.

⚠ CAUTION

- **If the device is not used for a long period, ensure the battery is fully charged before storing. Charge the battery at least once a month.**
  There is a risk that the battery may get excessively depleted and cannot be charged.
- **Be sure to install the cap when the battery charging port is not in use.**
  There is a risk of a short circuit caused by foreign objects.
- **Unplug the DC connector of the charger from the battery after charging.**
  There is a risk of battery deterioration if the DC connector of the charger is left plugged in the battery for a long time.

⚠ CAUTION

- **The battery and charger are for the WHILL Model F only. Do not charge the battery by using a non-designated charger or charge non-designated batteries with the charger provided with the device.**
  There is a risk of malfunctions.
- **Do not use batteries with the cap damaged or cracked.**
  If you do so, there is a risk of electric shock, short circuit, and fire.

- If the device does not start properly even though the charged battery is inserted to the device and the device is turned on after five seconds have elapsed, remove the battery, then attach the battery again after 10 seconds.
- The charger is for indoor use only. Do not charge the battery outdoors.
- The device decelerates when the battery temperature drops significantly in low-temperature (0°C or lower) environments. If this happens, the drive speed on level ground is restricted to 4 km/hour at maximum. Although the battery temperature is not the same as the air temperature or ambient environment, ensure that the battery is not left for a long time in 0°C or lower environments before driving.
- The device sometimes comes to a stop if an attempt is made to go up steep inclines when the battery temperature is low.
- The device decelerates if it is driven on a downhill slope with the battery close to fully charged. The device decelerates considerably more the lower the battery temperature becomes.
- We recommend charging the battery regularly, each time you finish using it for example, so that the device has a fully charged battery when it needs to be used. Insufficient battery power can be prevented by using a fully charged battery the next time the device is boarded. Although the device can be used without the battery charged fully, in an emergency, the device may get stuck while driving if the battery charge level is low.
- If you have any questions about the battery, please contact your dealer or customer support.

4.1. Battery and charger components

■ Battery

This device uses a lithium-ion battery with a voltage rating of 25.3 V.

> ℹ
> When disposing of the battery, follow your local lithium-ion battery disposal regulations.

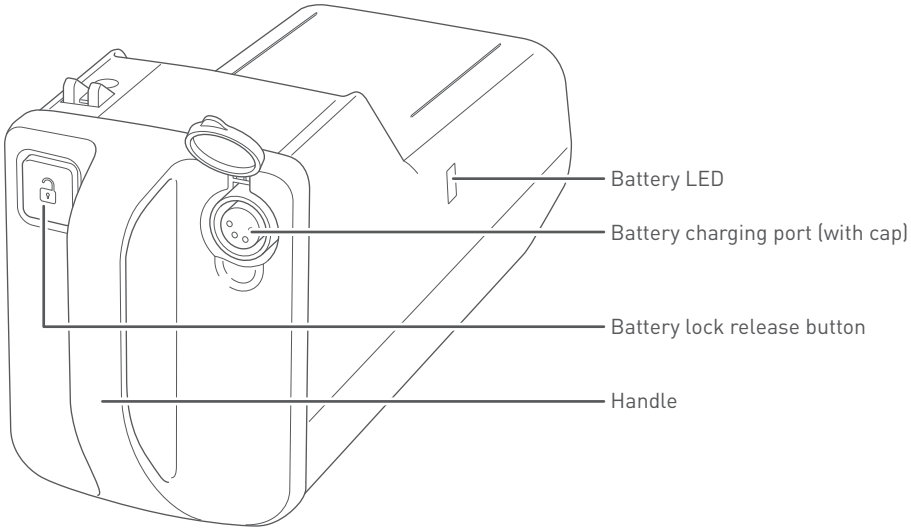

■ Charger

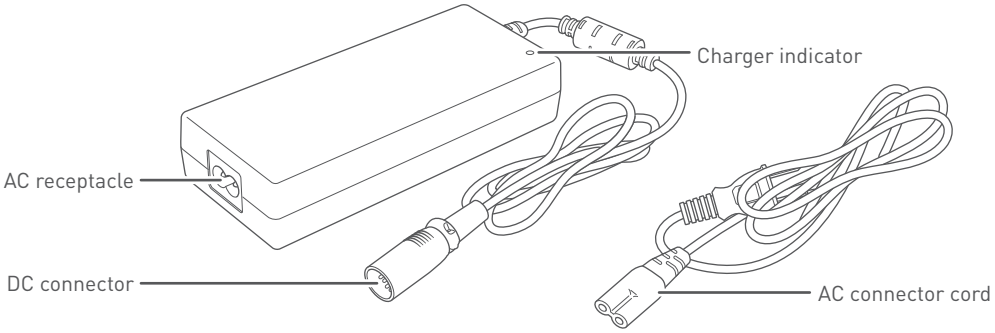

4.1.1. Removing the battery

1. Check that the device power is off.

2. Press the battery lock release button.

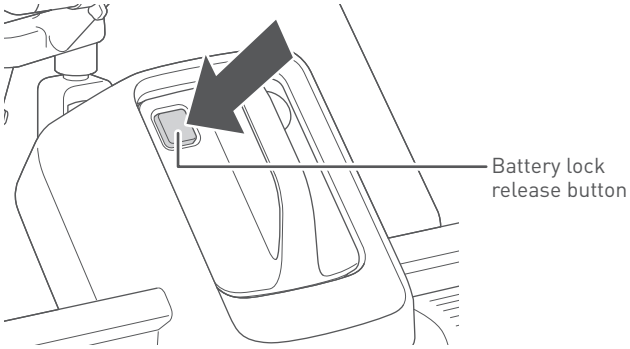

3. Grasp the handle and pull it toward you to remove the battery.

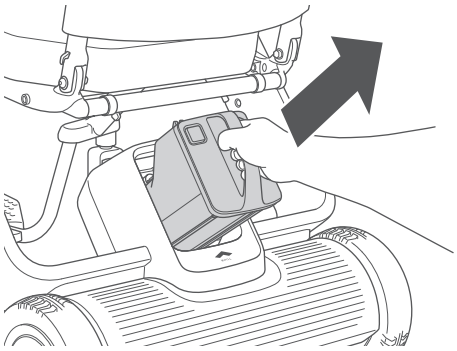

> The battery weighs 6.0 lb (2.7 kg). Handle the battery with care – dropping it will increase a risk of injury and damage to the battery. Otherwise, there is a risk of injury and damage to the battery.

4.2. Charging procedure

Be sure to charge the battery before using the device for the first time or when it has not been used for a long period of time.

There are two ways of charging the battery: charging with the battery installed on the device, or charging with the battery removed from the device.

No maintenance is required for the battery.

⚠ WARNING

- **Charge the device using a household power supply.**
  Otherwise, there is a risk of electric shock, short circuit, and fire. Charge using a 100 to 240 V, 50 to 60 Hz wall-mounted outlet.

- **Do not touch the battery and charger while the battery is being charged or after the charge is completed.**
  There is a risk of low temperature burns.
- **Do not touch the connectors directly, allow them to become wet, or bring any metal or other foreign objects close to them.**
  Otherwise, there is a risk of injury and of damage to the device or its parts.
- **Do not use an extension cord with the charger.**
  Otherwise, there is a risk of electric shock, short circuit, and fire.
- **Do not pull with excessive force on the AC connector cord.**
  Otherwise, there is a risk of electric shock, short circuit, and fire.
- **Do not charge with wet hands.**
  There is a risk of electric shock.

⚠ CAUTION

- **Charge at an ambient temperature between 0 and 40°C (32 and 104°F).**
  The battery may not charge if charged at a temperature outside this range. This may cause battery deterioration or battery damage.
- **If the device is not used for a long period, ensure the battery is fully charged before storing. Charge the battery at least once a month.**
  There is a risk that the battery may get excessively depleted and cannot be charged.

- **Do not charge the battery while the brakes are released.**
  There is a risk that the device may move, causing an accident.
- **Do not use the charger and AC connector cord other than those provided with the device.**
  Using a charger or AC connector cord other than the one supplied may result in electric shock, or in burns caused by charger overheating. In addition, do not use the charger and AC connector cord included with the device in any other device.

- The device cannot be used while the battery is being charged.
- The approximate charging time is 5 hours.
- The charger is designed to prevent overcharging. Even if the charger is left plugged in for more than 5 hours, there is no risk of the device being damaged. However for safety reasons, avoid leaving the charger plugged into the wall outlet for a long time.
- Immediately disconnect the DC connector from the battery after charging is completed.
- If the usable time after charging has become abnormally short and the battery must be replaced, contact your dealer or customer support.

4.2.1. Charging with the battery installed in the device

For safety reasons, it is not possible to turn on the device power while the battery is being charged.

1. **Move the device close to the outlet.**

2. **Turn off the device power.**

3. **Connect the charger and AC connector cord.**

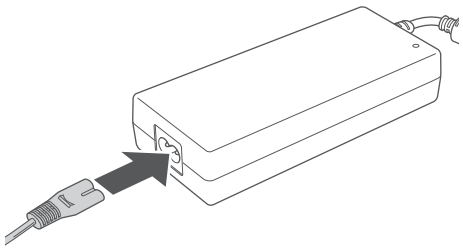

4. **Plug the charger into the wall outlet.**
   The charger indicator illuminates yellow.

> When the charger indicator is yellow, it means that the charger is connected to the wall outlet and not connected to the battery.

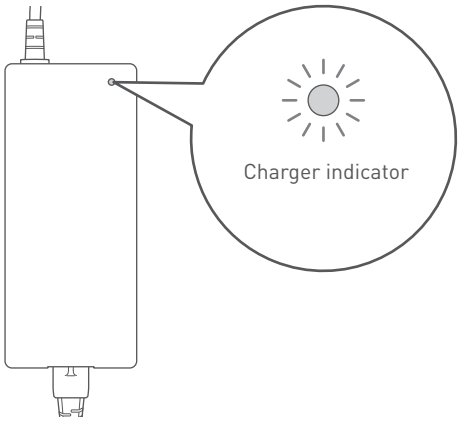

5. **Remove the cap of the battery charging port and connect the DC connector to the battery charging port.**
Connect the DC connector so that the terminal inside is aligned with the hole of the charging port.
The charger indicator begins flashing green, and charging starts.

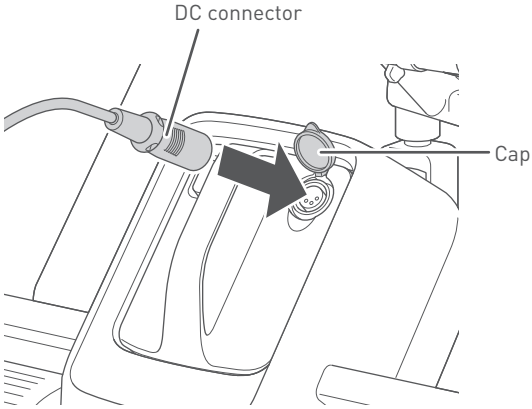

- If the charger indicator flashes yellow, the charger is not properly connected. In this case, disconnect and reconnect the battery charging connector.
- If the charger indicator flashes yellow even though you attempt to establish a connection several times, a battery or charger malfunction may have occurred.
- If the charger indicator turns green right away even though the battery is not charged fully, a battery other than the battery provided with the device may have been used. Be sure that the charger indicator flashes green.

6. **Charging is completed when the charger indicator turns solid green.**

7. **Disconnect the DC connector from the battery, then disconnect the plug from the wall outlet.**

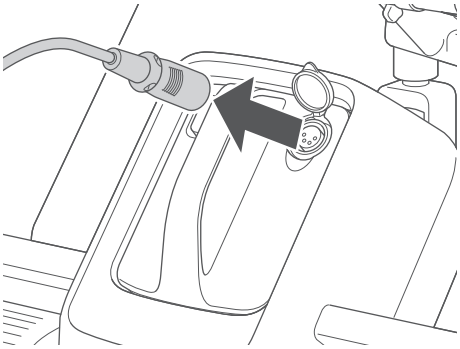

8. **Close the cap of the battery charging port.**

4.2.2. Charging with the battery removed

1. **Check that the device power is off.**

2. **Remove the battery.**
   For the removal procedure, refer to “4.1.1. Removing the battery” on page 59.

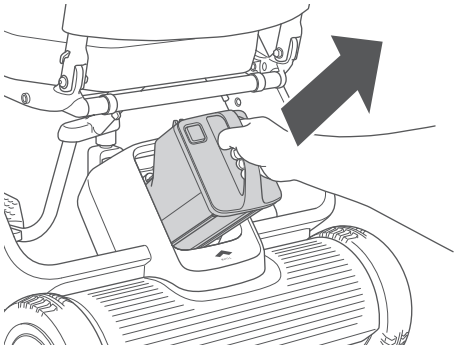

3. **Connect the charger and AC connector cord.**

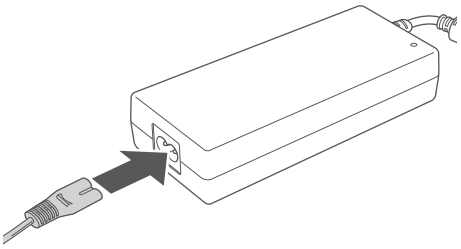

4. **Plug the charger into the wall outlet.**
   The charger indicator illuminates yellow.

> When the charger indicator is yellow, it means that the charger is connected to the wall outlet and not connected to the battery.

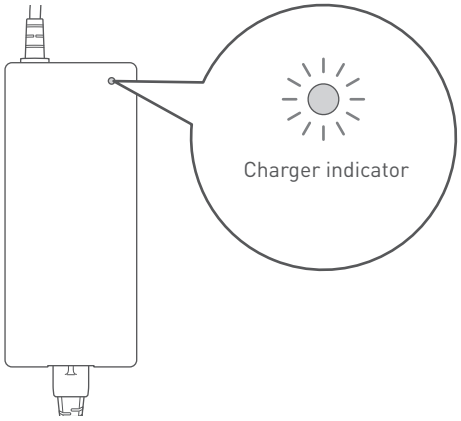

5. **Remove the cap of the battery charging port and connect the DC connector to the battery charging port.**
Connect the DC connector so that the terminal inside is aligned with the hole of the charging port.
The charger indicator begins flashing green, and charging starts.

You can check the charge level of the battery on the battery LED.
- Full charge: green
- Approx. 30% to less than full charge: orange
- Approx. 30% charge or less: red
- No charge: purple

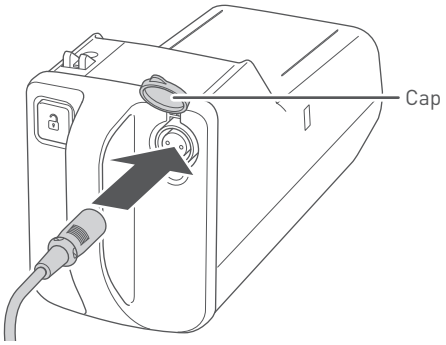

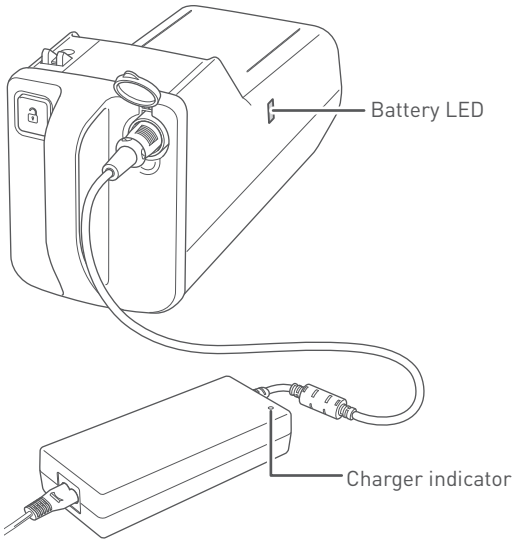

- If the charger indicator flashes yellow, the charger is not properly connected. In this case, disconnect and reconnect the battery charging connector.
- If the charger indicator flashes yellow even though you attempt to establish a connection several times, a battery or charger malfunction may have occurred.
- If the charger indicator turns green right away even though the battery is not charged fully, a battery other than the battery provided with the device may have been used.

6. **Charging is completed when the charger indicator and battery LED turn solid green.**

The battery LED turns off shortly after charging completes.

7. Disconnect the DC connector from the battery, then disconnect the plug from the wall outlet.

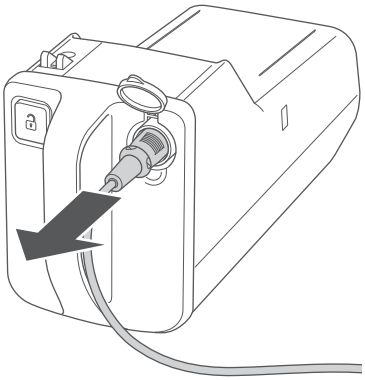

8. Close the cap of the battery charging port.

9. Install the battery.
For the installation procedure, refer to “3.2.8. Installing the battery” on page 46.

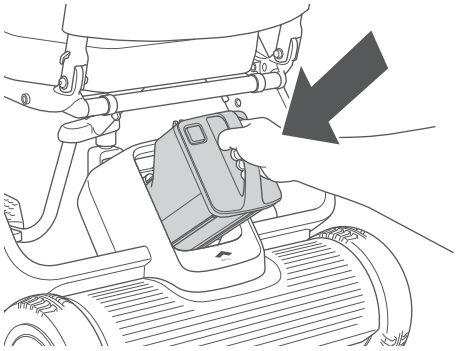

4.2.3. Charger indicator displays

The charger indicator illuminates or flashes according to the battery states as shown below.

- Flashing green: charging
- Solid green: charging completed
- Solid yellow: standby
- Flashing yellow: charging error*

  *Charging is not possible when the charger indicator is flashing yellow.

  When the charger indicator flashes yellow, disconnect the charger from the battery and reconnect it securely. If the issue continues after reconnecting, try using a different power outlet. Ensure connecting the plug after confirming the charger indicator turns off. If the problem persists, discontinue use and contact your dealer/distributor or WHILL Customer Support for further assistance.

5. Operating procedures

This section explains the procedures for getting in and operating the device.

⚠ WARNING

- **Do not sit on the controller, place the controller on the ground with the device folded, or apply an excessive load to the controller. Do not press the controller or switches with excessive force or operate them with a sharp object.**
  There is a risk that the controller may be damaged, rendering the device inoperable.

⚠ CAUTION

- **If the device is not used for a long period, ensure the battery is fully charged before storing. Charge the battery at least once a month.**
  There is a risk that the battery may get excessively depleted and cannot be charged.

- This device is an electrical product. The waterproof performance of this device conforms to IPX4 (resistance against water splashes from any direction). To prevent a potential malfunction, please avoid extended use in rainy weather and driving through puddles.
- When using the device for the first time, it is recommended that you use it in an environment with someone around you.

5.1. Inspection before getting in the device

⚠ WARNING

- **Inspect the following before getting in the device.**
  If you get in the device with some problem still present, there is a risk of injury or accident. If components need to be replaced or repaired, stop using the device immediately and contact your dealer or technical support.

Inspection items

1. Inspection with the power off

   Assembly

   - Check that all parts are correctly assembled and that there are no missing, broken, damaged, or loose parts.

   Function

   - Check that the joystick moves smoothly.
   - Check that the brakes can be released and the device can be pushed manually. Also, check that when the brakes are locked, the device does not move when pushed.
   - Check that the device has been properly unlocked (the lock indicator on the inside of the right arm shows red).

   Wheels

   - Check the treads and ensure they are not worn down by more than 1/64 inches (0.5 mm).
   - Check that there is no visible deformation or cracking of the front or rear wheels.
   - Check the rear wheels to see that they are at the appropriate air pressure [specified air pressure: 40 PSI]. (Tires are not crushed when pressed in by fingers.)

   Seat assembly

   - Check the seat to see that it is not ripped or sagging excessively.

2. Inspection with the power on

   - Check the battery charge level on the display and the charge level is sufficient.
   - Check that the switches on the controller are functional.
   - Check that the entire display is functional.
   - Check that the horn button is functional.
   - Check that the wheels are not making unusual noises when they spin.

If you encounter any of the problems listed above, which you are unable to resolve, contact your dealer or customer support.

5.2. Getting in the device

Read this manual to understand the contents before using the device. Correctly understand the contents of this manual before using the device.

Pay attention to the following when getting in.

⚠ WARNING

- **Get in and out of the device on a flat and level surface.**
  Otherwise, there is a risk of accident.
- **Turn off the device power when getting in and out of the device.**
  There is a risk of unexpected movement of the device caused by accidental contact with the controller.
- **Before use, check that the lock indicator on the inside of the right arm does not show red and that the arm is locked.**
  There is a risk of accident by the device being folded unexpectedly while driving.
- **Ensure that the brakes are locked before getting in the device. Do not leave the device while the brakes are released.**
  If the brakes are released, there is a risk that the device may start moving and tip over.
- **If your body is not stable in the seat of the device, ensure you use the lap belt (if equipped).**
  There is a risk of falling out of the device. If the device you are using does not have a lap belt, contact your dealer or customer support.
- **The maximum load weight for this device is 253.5 lb (approx. 115 kg). It includes both the occupant and any luggage. Use the device without subjecting it to a load higher than this limit.**
  There is a risk of damaging the device.
- **When using your own cushion, for safety, be sure to use one that has sufficient flame retardancy.**
- **Before using the device, press the rear tires with your finger to check that they are filled with enough air.**
  The device might no longer be controllable if the air pressure is insufficient. Fill the rear wheels with air by using an air pump. [Specified air pressure: 40 PSI]

- **Do not place your weight on the controller.**
  There is a risk that these components may become disconnected, rendering the device inoperable.
- **Do not jump onto the foot rest, stand on the foot rest, or place an excessive load on the foot rest.**
  There is a risk of the device lifting up and tipping.
- **Prevent clothing, scarves or other objects from touching the wheels while driving.**
  If clothing, scarves or other objects touch and get entangled in the wheels, there is the risk of injury, and it could prevent the device from being controlled (e.g. it might stop operating) which may cause an accident.

⚠ CAUTION

- **Make sure the device is functional in a safe space each time after setting and adjusting the speed.**
  There is a risk of unintended movement of the device.
- **The back support is not fixed. Be careful when transferring.**
  There is a risk of injury.
- **If the device is equipped with a lap belt, fasten it during use.**
  There is a risk of injury.

- **Do not apply force to the device from the sides.**
  There is a risk that the device may tip over. Do not forcefully push or pull the device from the side.

The maximum driving range or driving speed of this device may vary depending on the driving conditions such as hills, curves, steps, terrain, load, and temperature. The device may stop suddenly depending on the condition. For errors that occur during use, check “10. Troubleshooting” on page 108.

5.2.1. Accessing the seat from the front

1. **Ensure that the power is turned off.**

2. **Raise the foot rest by lifting the end of the foot rest with your hand.**

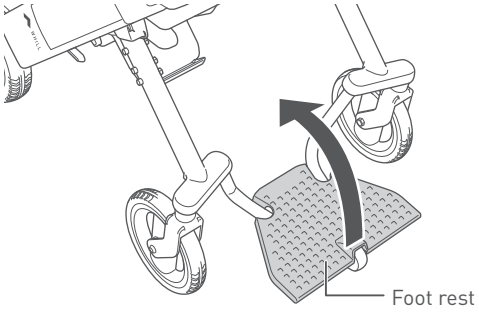

When getting in the device, do not get on or stand on the foot rest. The device may tip over, and there is a risk of injury.

3. **Sit in the seat.**

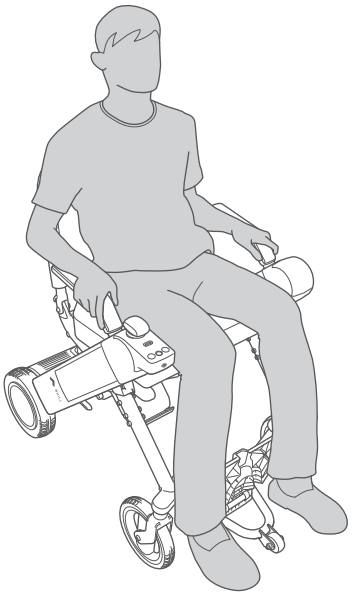

- Do not let your hands touch the controller.
- As the back support can be folded forward, do not pull it toward you or apply force to it in the forward direction. There is a risk that the back support may tilt forward, causing an accident.
- Before using the device, be sure to check that the device has been properly unlocked.
- Take care not to catch or bump your feet against the foot rest frame.
- Do not get on or place your weight on the foot rest frame. The device may tilt forwards and tip over, and there is a risk of accidents.

4. Lower the foot rest by pushing the end of the foot rest down with your hand.

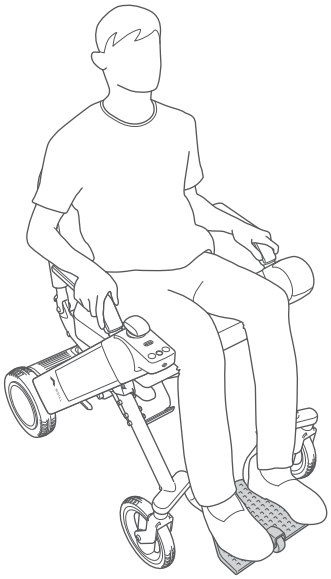

5.3. Tightening the lap belt

If the product you are using is equipped with a lap belt, fasten it during use. It may be sold separately depending on the area/country.

1. **Tighten the lap belt.**
   Insert the tongue into the buckle until a click sound is heard.

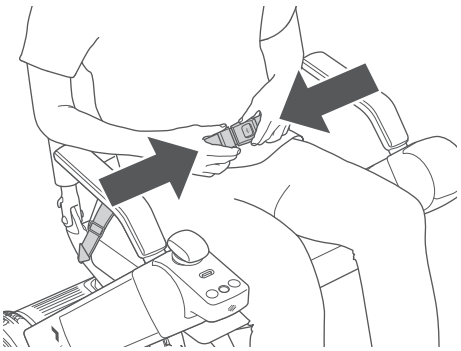

   After fastening the belt, adjust its length so that your body is held securely in place.

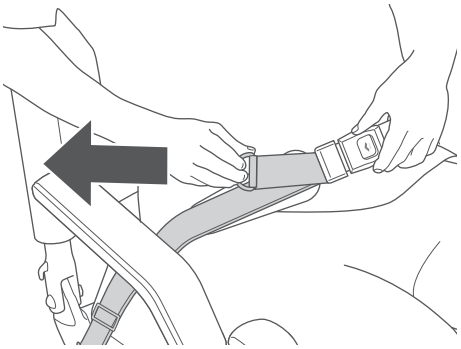

5

5.3.1. Removing the lap belt

1. **1 Press the button on the buckle of the lap belt to 2 remove the lap belt.**

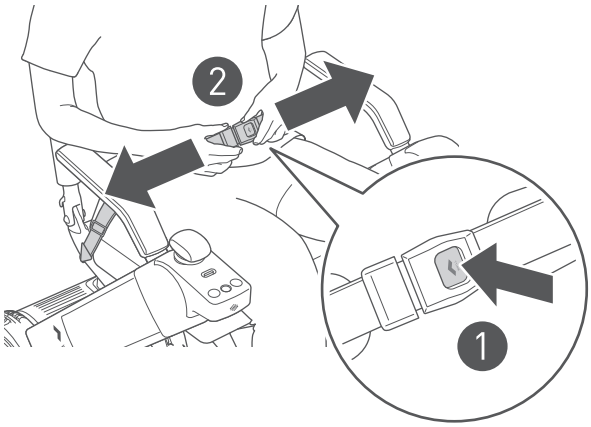

5.4. Turning on the power

⚠ WARNING

- **Lock the brakes before turning on the power.**
  If the brakes are released, there is a risk that the device may start moving and tip over.

- **Do not press the switches on the controller with excessive force or operate them with a sharp object.**
  There is a risk that the controller may be damaged, rendering the device inoperable.

⚠ CAUTION

- **Make sure the device is functional in a safe space each time after setting and adjusting the speed.**
  There is a risk of unintended movement of the device.

1. **Press the power button.**

> If the device does not start properly even though the charged battery is inserted to the device and the device is turned on after five seconds have elapsed, remove the battery, then attach the battery again after 10 seconds.

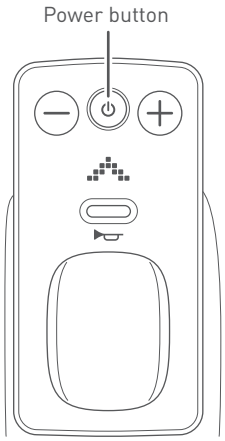

When the device turns on, first the WHILL logo appears on the display, and next the current speed setting is displayed. The display will then show the battery charge level indicator.
To check the speed setting again, either turn the power off and back on, or press the speed select buttons to adjust the speed.

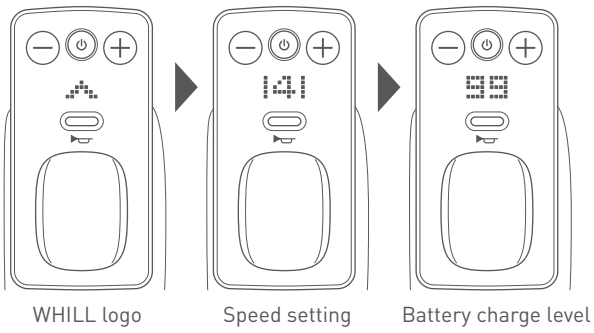

5.4.1. Checking the battery charge level

1. **The battery charge level is shown on the display as a number from 0 to 100, changing in increments of 1.**
   When fully charged, the charge level is shown as “100”.

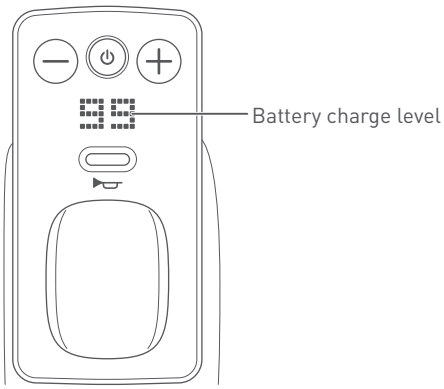

> The battery charge level may decrease rapidly or unexpectedly for various reasons such as the environment or battery conditions due to the characteristics of the lithium ion battery. Be sure to fully charge the battery before using it regardless of the distance you plan to travel.

5

5.4.2. Controlling the speed

1. **The maximum speed (when the joystick is tilted all the way) can be adjusted in 4 stages from 1 (slow) to 4 (fast) by operating the speed select buttons.**
   + button: increasing the speed.
   - button: decreasing the speed.
   The device speed can be adjusted according to degree of movement of the joystick via a proportional drive system.

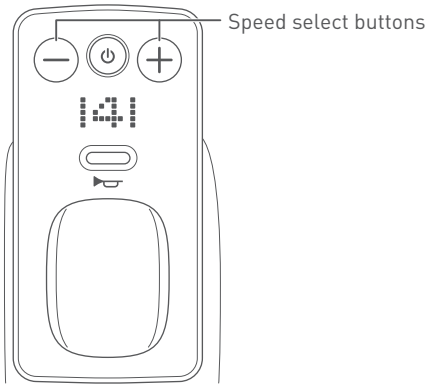

5.4.3. Using the horn button

1. **To alert individuals near your device, press the horn button.**

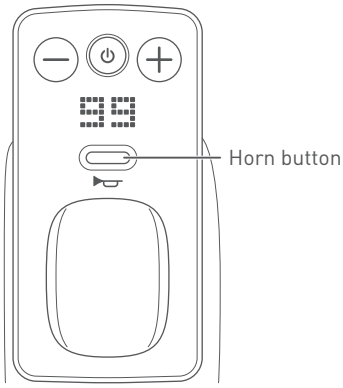

5.5. Driving

Move the joystick forward, backward, left, or right to move the device in the desired direction. The speed can be adjusted by the degree of joystick movement via a proportional drive system.

Releasing the joystick automatically applies the brakes and stops the device.

When driving outdoors, always observe all traffic laws.

If you want to practice driving, do so in an open space with good visibility.

⚠ WARNING

- **Ensure the battery is locked before driving.**
  The device may stop while driving due to problems between the connection of the device and battery.
- **Lower the foot rest and keep your feet on the foot rest while driving. Prevent your feet from extending outside both ends of the foot rest.**
  Otherwise, there is a risk that your feet may get caught on the ground or in the front wheels.
- **When operating the device while wearing gloves, be careful to avoid getting the gloves caught in the device.**
  There is a risk that the gloves may get caught in control components, resulting in unintended movement of the device.
- **When driving, fully check the surroundings and road conditions. Drive carefully at low speed particularly when driving in locations crowded with people, close to walls or other locations where there are obstacles nearby, and in narrow places or on uneven surfaces or slopes.**
  Otherwise, there is a risk of accident. When driving on wet inclines, there is a risk that the device may loose stability. Pay close attention when driving.
- **When approaching curbs, steps, slopes, and similar obstacles, approach at a 90° angle and drive over them carefully at low speed.**
  There is a risk of tipping over or deforming the drive base.
- **Be careful that people or objects around you do not touch the controller.**
  There is a risk of collision and tipping over.
- **Avoid letting your body touch the wheels. Do not let others around you touch the wheels.**
  There is a risk of injury.
- **When stopping on a downhill slope, release the controller early, and make sure that the device stops with an ample amount of extra space around it.**
  The stopping distance is longer when on a downhill slope. There is a risk that you may be unable to stop in the intended position, causing an accident.
- **When driving near a station platform or gutter, maintain a safe distance from the edge.**
  There is a risk of falling.

⚠ WARNING

- **Release the brakes only when on a flat surface and in emergencies after turning off the power. After moving the device manually with the brakes released, raise the brake release levers and lock the brakes.**
  There is a risk accidents may occur because the device will move freely when the brakes are released.
- **When going across level crossings or streetcar tracks, approach at a right angle to the tracks, and do not turn midway while you are crossing the tracks.**
  Otherwise, there is the risk that the wheels of the device will get caught in the groove of the tracks and cannot be pulled out.

- **Do not press the switches on the controller with excessive force or operate them with a sharp object.**
  There is a risk that the controller may be damaged, rendering the device inoperable.
- **While riding the device, do not crouch down, lean out of the device, or exercise. Pay attention to the center of mass while driving.**
  There is a risk the device stability and balance will be affected. Request help from those around the device before reaching for inaccessible objects.
- **Do not drive while holding something in your hand or with something placed on your lap.**
  There is a risk of unintended movement of the device.
- **Do not drive the device in the following areas.**
  The device may tip over and there is a risk of accidents.
  - Escalators or stairs
  - Steps higher than approximately 1.4 inches (35 mm)
  - Slopes with a gradient of 10° or more
  - Soft surfaces such as sand or mud
  - Snowy or frozen paths
- **Do not drive through puddles.**
  There is a risk of corrosion and short circuit.
- **Do not extend arms, legs, or baggage outside of the device.**
  There is a risk of injury caused by collision while driving.
- **Do not tow using the device.**
  There is a risk of tipping over.
- **Do not attempt to maneuver the device onto an incline if the anti-tip rollers touch the ground on the incline. When the anti-tip rollers touch the ground it means that the incline is too steep for the device.**
  There is a risk of injury to the user and the device no longer being controllable as a result of tipping over.
- **Do not go off curbs or steps that are higher than approximately 1.4 inches (35 mm)**
  This may cause the anti-tip rollers to catch on the step and the device may no longer be able to be driven.
- **Prevent clothing, scarves or other objects from touching the wheels while driving.**
  If clothing, scarves or other objects touch and get entangled in the wheels, there is the risk of injury, and it could prevent the device from being controlled (e.g. it might stop operating) which may cause an accident.

⚠ CAUTION

- **Check that the arm rest adjustment screws are tightened and not loose before beginning operation.**
  There is a risk of accident by the arm rests moving and coming loose while driving.
- **The device may slow down or suddenly stop in the following cases.**
  - The remaining capacity of the battery becomes low.
  - The battery temperature drops significantly during use.
  - Driving downhill at a high speed in low temperature.
  - Driving on a steep slope with the battery charged fully.
  - Driving on bumps or upward slopes.
- **When outdoors, drive on the paved sidewalk.**
  This device is not designed for use on roads for automobile. When crossing roads, check that the drivers can see you and exercise sufficient caution.

- **Do not twist the joystick assembly except when replacing it.**
  There is a risk that the joystick may be loosened or damaged, rendering the device inoperable.
- **Do not operate the brake release levers with your feet.**
  The brake release levers may become deformed, broken, and unusable.

- When driving on steep inclines, the deceleration rate of the device may automatically change.
- When driving on a downhill slope when the battery temperature is low and with the battery close to fully charged, it becomes more possible that the device will decelerate.
- If you use the device indoors, flooring may be damaged or become dirty.

5.5.1. Moving forward and backward

Move the joystick forward to move the device forward, and backward to move the device backward.

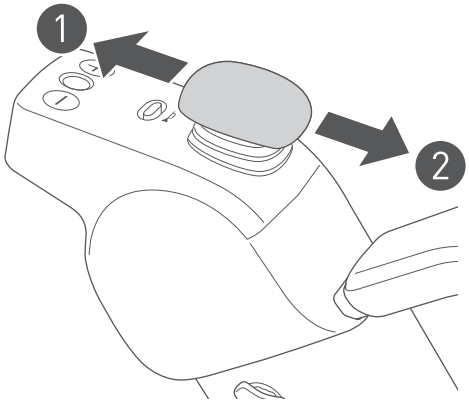

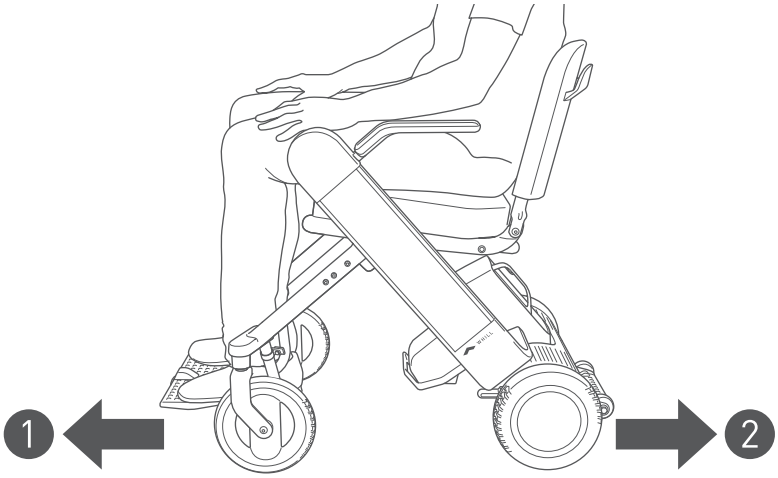

5

5.5.2. Moving in a diagonal direction

To move in a diagonal direction, first turn the device so that it faces the direction you want to go. Then move the joystick straight forward or backward to move forward or backward in the diagonal direction.

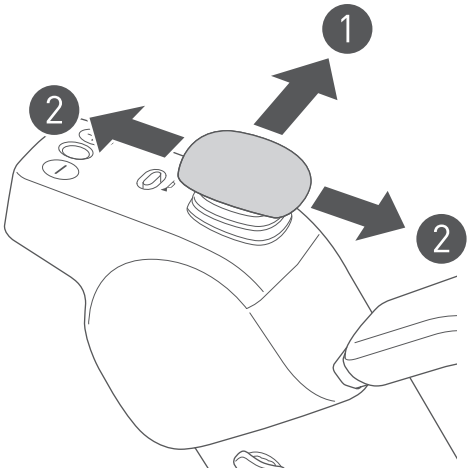

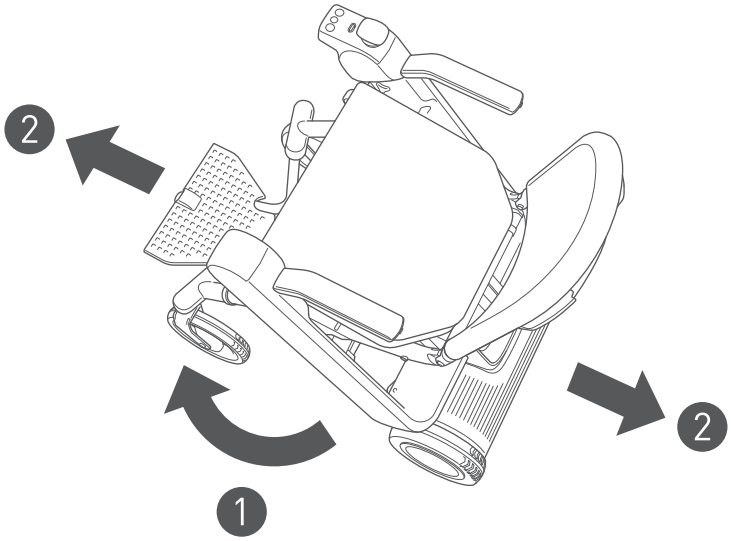

5.5.3. Turning

To turn in place, move and hold the joystick to the left or right.

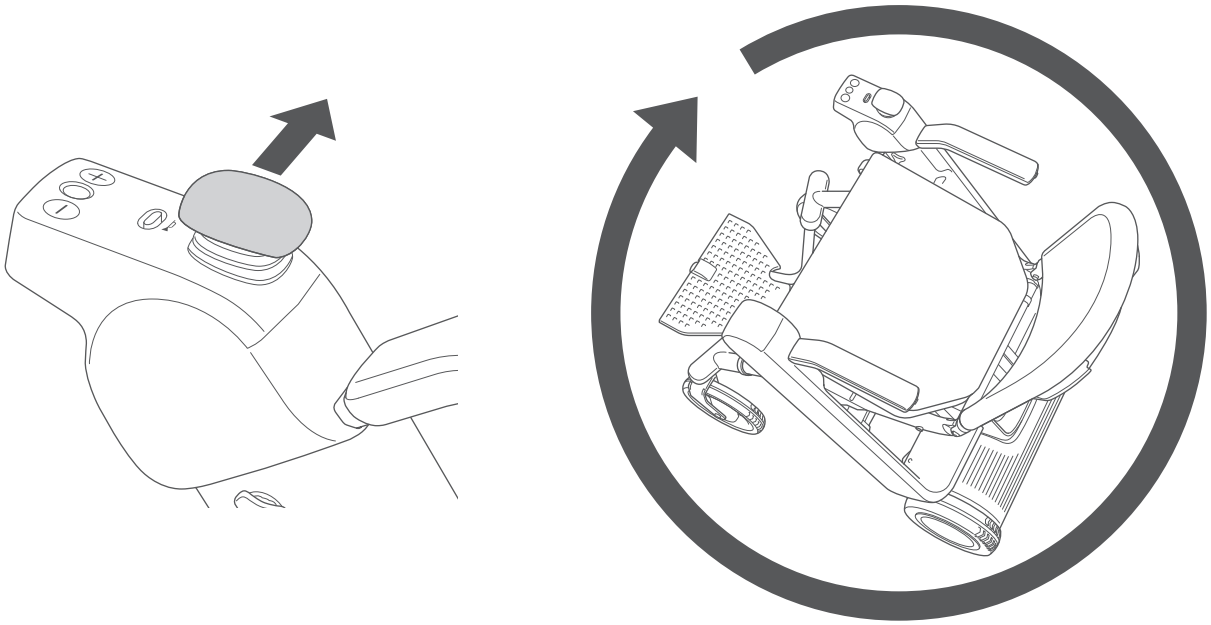

5.5.4. Stopping

Releasing the joystick automatically applies the brakes and stops the device.

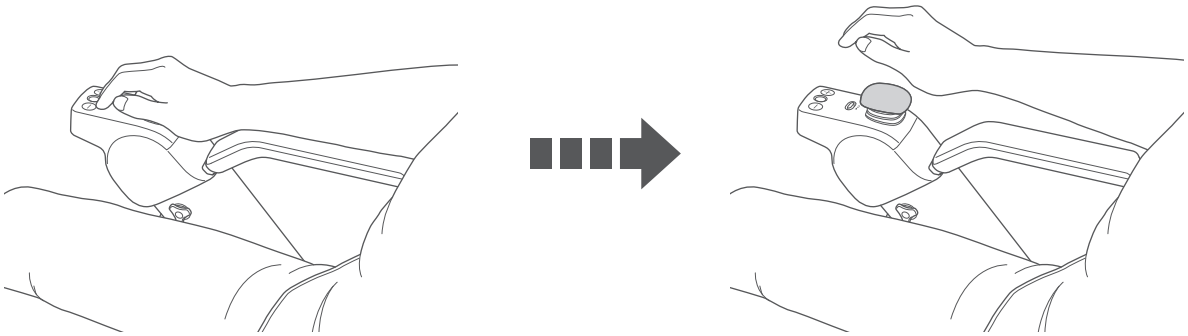

5.5.5. Adjusting the speed

The device speed can be controlled by the degree of movement of the joystick.

Increasing the tilt angle of the joystick increases the device speed while reducing the tilt angle decreases the speed.

The speed can be controlled in a continuous scale.

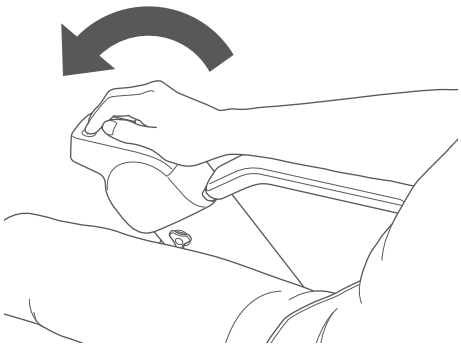

High speed (large tilt angle)

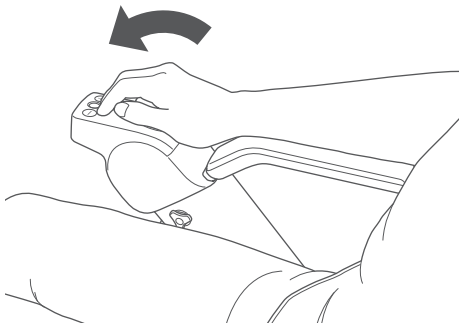

Low speed (small tilt angle)

5

- When beginning to drive, move the joystick only the amount needed to start moving slowly.
- The maximum speed when the joystick is moved all the way varies depending on the speed that was set with the speed select buttons. For the procedure used to set the maximum speed, refer to “5.4.2. Controlling the speed” on page 76.

5.5.6. Driving under different road conditions

The device can maintain stability under a wide range of road conditions.

However, it cannot be driven under the following conditions.

- Steps higher than approximately 1.4 inches (35 mm)

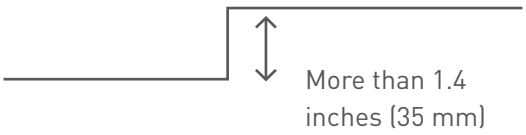

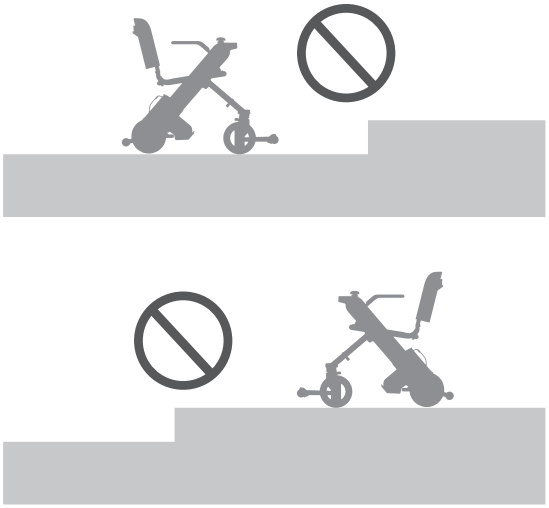

- Slopes with a gradient of 10° or more

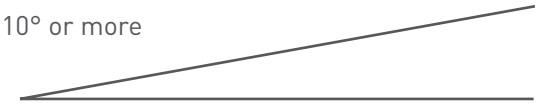

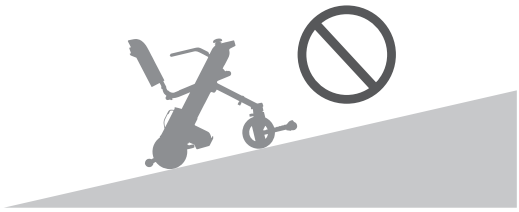

- Soft surfaces such as sand, mud, snowy or frozen paths.
  *Driving on gravel, light snow, and grass is possible.

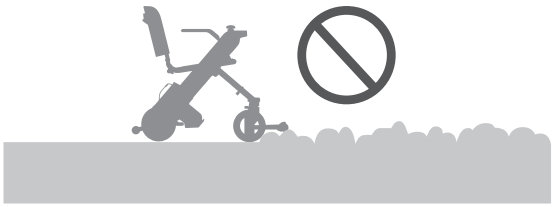

When the device might be on an extremely steep uphill slope, a warning is displayed and a warning tone sounds.

For details on warnings, refer to “10. Troubleshooting” on page 108.

5.6. Releasing the brakes

To move the device manually, push down the brake release levers located below the seat assembly.

⚠ WARNING

- **Release the brakes only when on a flat surface and in emergencies after turning off the power. After moving the device manually with the brakes released, raise the brake release levers and lock the brakes.**
  There is a risk accidents may occur because the device will move freely when the brakes are released.

- **Do not manually go up and down slopes with the brakes released.**
  There is a risk accidents may occur because the brakes do not work.

⚠ CAUTION

- **When moving the device after releasing the brakes, push it slowly by hand while paying attention to the condition of the road.**
  When the brakes are released, the device will move freely. Pushing it forcefully may cause it to move in an unexpected direction. If the device is pushed at speeds of 3.7 mph (6 km/h) or higher, there is a risk of battery malfunction because a load is applied to the battery.

- **When operating the brake release lever, be careful not to catch or crush your finger or hand.**
  There is a risk of injury.

- **Do not operate the brake release levers with your feet.**
  The brake release levers may become deformed, broken, and unusable.

5.6.1. Release procedure

1. **Turn off the device power.**

2. **Push down both brake release levers below the seat assembly (two on the right and left side).**
   The brakes are released. To re-engage the brakes, raise both brake release levers.

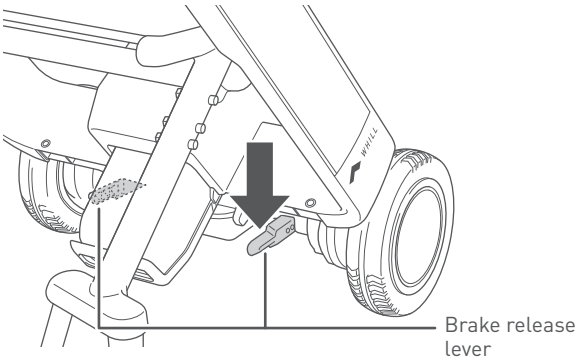

5.7. Carrying items

⚠ WARNING

- **Prevent the shoulder belts or strings of rucksacks from touching the rear wheels.**
  This may prevent the device from being controlled (e.g. it might stop operating), and this may cause injury or an accident.
- **Be careful not to place luggage that exceeds the width of the device.**
  Otherwise, there is a risk of accident due to luggage coming into contact with the surrounding area.

■ Back support

When hanging a backpack on the back support, hang the shoulder straps onto the hooks on the back support.

- The maximum load of the back support is 11 lb (5 kg).
- Hang the rucksack by its shoulder straps and tighten them. Be careful not to let the rucksack touch the battery, and make sure that the shoulder straps are not dragging on the ground.

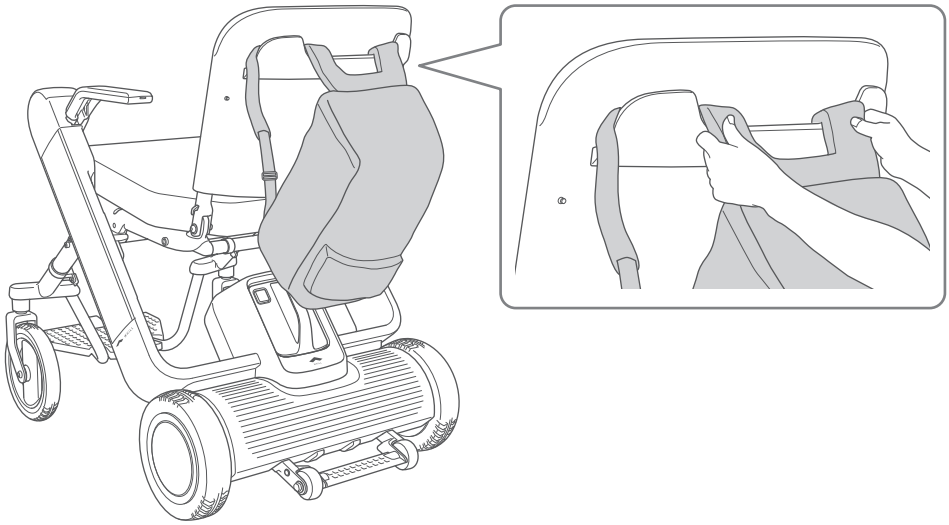

6. Folding Procedure

6.1. Safety notices

This section explains how to fold and unfold the device.

⚠ WARNING

- **Perform folding and unfolding of the device on a flat and level surface.**
  Otherwise, there is a risk of accident.
- **Perform folding and unfolding of the device with the brakes applied.**
  Otherwise, there is a risk of unintended movement of the device which may cause accidents.

⚠ CAUTION

- **When folding or unfolding the device, grab only the handle and part as described in this manual, and do not hold the device by any other areas.**
  Otherwise, there is a risk of hand injury if it gets caught in the device.

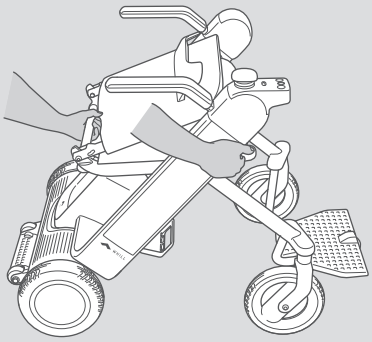

6.2. How to fold the device

1. **Tilt the back support forward.**

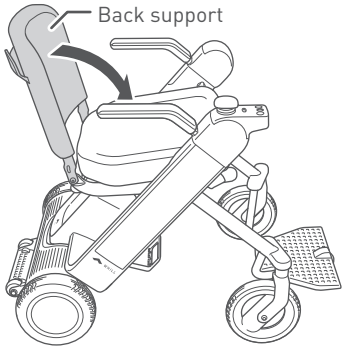

2. **Fix the device in place while supporting the foot pedal.**

> There is a risk of foot injury if it gets stuck under the foot pedal when folding the device.

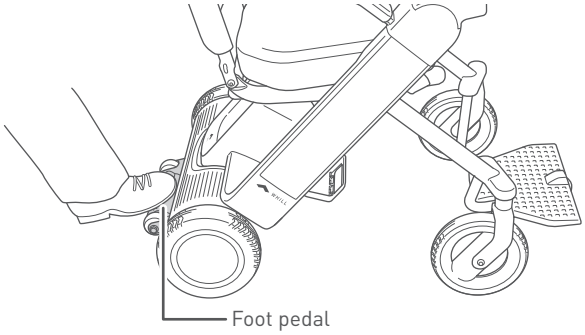

3. **Keep the device in this state with the lock release button pressed in.**

> Warning
>
> Inserting a finger or other body part into the connecting components and moving parts of this device may result in an injury.
> When assembling, adjusting, and transporting this device, do not touch any component other than those indicated in the manual.

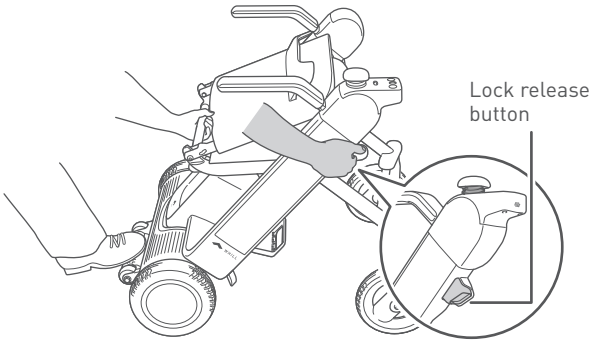

4. **Pull the seat pipe upwards.**
When the device begins to close, take your hand away from the lock release button to unlock the device.

> Warning
>
> Inserting a finger or other body part into the connecting components and moving parts of this device may result in an injury.
> When assembling, adjusting, and transporting this device, do not touch any component other than those indicated in the manual.

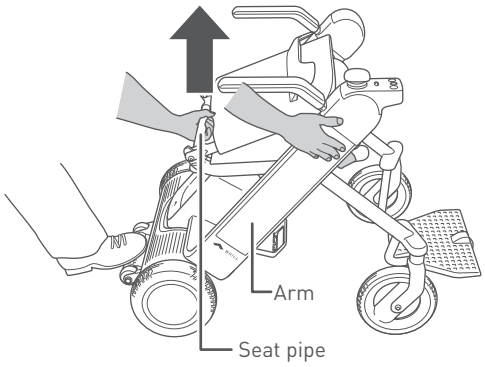

5. **Close the device to the position where you hear a click sound.**

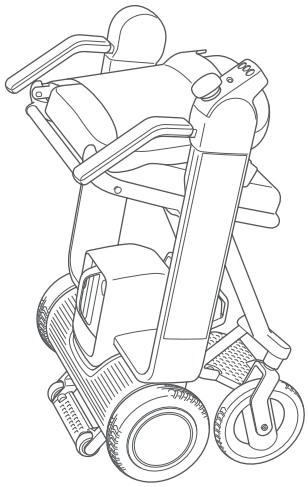

- The device sometimes cannot be folded if the front wheels are touching the rear wheels.
- When moving the device, fully check the surroundings and road conditions, and take care to prevent collision and falling out of the device.
- Do not apply force to the device from the sides or drag the device.

6.3. How to unfold the device

1. Fix the device in place while supporting the foot pedal.

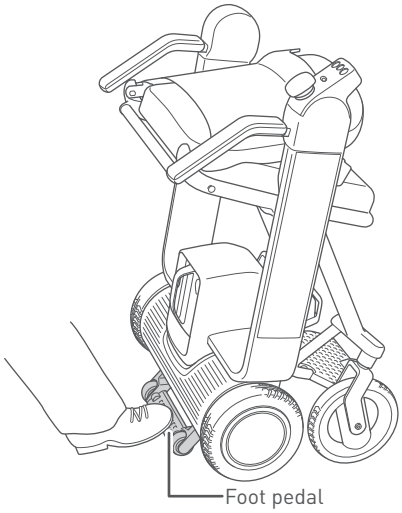

2. Pull the seat pipe upwards.

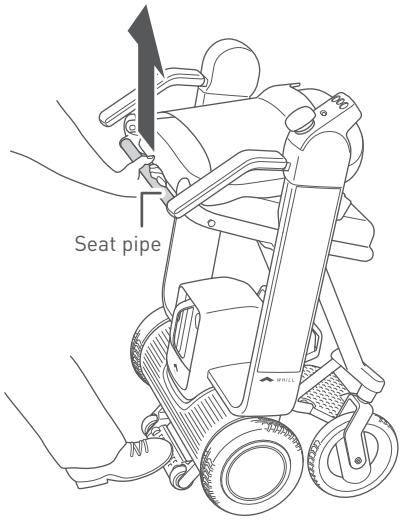

3. With the seat pipe pulled upwards, press the lock release button.

> To prevent malfunctioning of the lock release button, the lock release button has been designed so that it can be pushed in only when the seat pipe is pulled upwards.

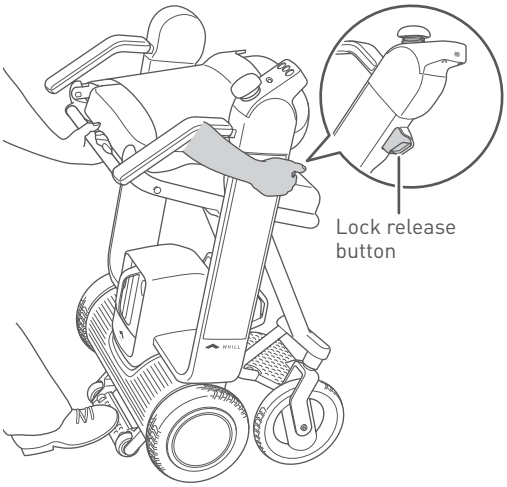

4. **Lower the seat pipe, and when the device begins to unfold, take your hand away from the lock release button.**
Open the device to the position where you hear a click sound.

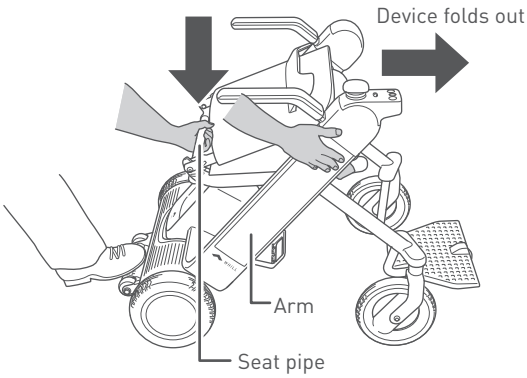

> ⚠ Warning
>
> Inserting a finger or other body part into the connecting components and moving parts of this device may result in an injury.
> When assembling, adjusting, and transporting this device, do not touch any component other than those indicated in the manual.

> ℹ
>
> Check that the lock indicator on the inside of the right arm shows black.
> When the device is not correctly folded out, the lock indicator shows red.
>
> 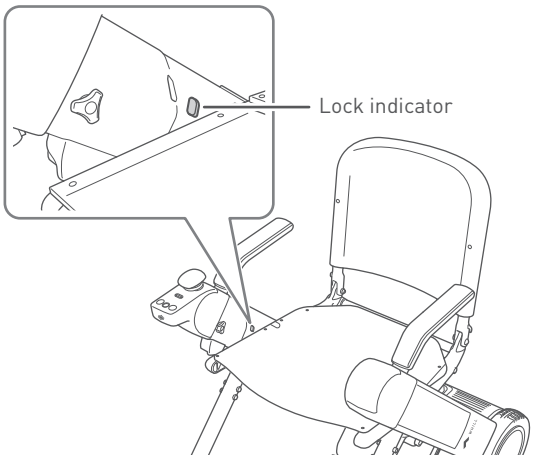
>

5. **Tilt the back support backward.**

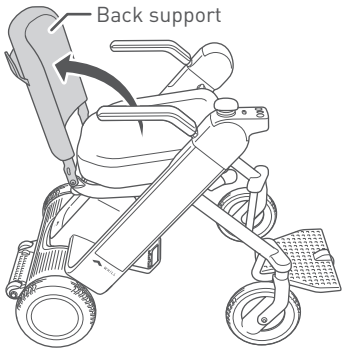

> ⚠ Warning
>
> Inserting a finger or other body part into the connecting components and moving parts of this device may result in an injury.
> When assembling, adjusting, and transporting this device, do not touch any component other than those indicated in the manual.

7. Storage and transport methods

7.1. Storage

Pay attention to the following when storing this device.

- Do not store it near flame or flammable gas.
- Store in a location with an ambient temperature of -15°C and 40°C (5°F and 104°F). We recommend storing the battery and charger between 0 and 40°C (32°F and 104°F) which is the designated charging temperature.
- Store in a location with the humidity between 8% and 90%.
- Do not place the controller on the ground with the device folded, or apply an excessive load to the controller.
- Store the device indoors or covered.

⚠ WARNING

- **Do not store the battery at locations subject to the direct sunlight or at locations reaching or exceeding 40°C.**
  There is the risk of the battery heating up, rupturing and igniting, and this may cause an accident.

⚠ CAUTION

- **If the device is not used for a long period, ensure the battery is fully charged before storing. Charge the battery at least once a month.**
  There is a risk that the battery may get excessively depleted and cannot be charged.

- **Do not store the device for a long period of time in a location with heavy amounts of dust or sand, near the sea, or in a hot spring area.**
  There is a risk of foreign objects entering the device and corroding the frame and screws.
- **Do not store the device with a heavy object placed on it for a long period.**
  There is a risk of device malfunction.
- **Do not place the battery or device in a location that is inclined, in a vibration-prone area, on a high shelf, or in other similar places.**
  There is a risk of damage to or deformation of the battery or device.
- **When removing the battery and storing the device, take sufficient care to prevent foreign objects or water to come into contact the connecting components of the battery and device.**
  There is a risk of device malfunction due to short circuiting of the battery or device.
- **Do not store the device outdoors in a location exposed to direct sunlight or rain.**
  There is a risk that rain may cause a short circuit, and that direct sunlight may cause deformation or deterioration of the battery or device. Store them indoors or in another location under a roof.

■ When storing for a long period

When storing for a month or longer, remove the battery from the device and fully charge it. At least once a month, charge the battery and check that the device operates correctly.

When using this device again after a prolonged period of disuse, charge the battery before using it, and be sure to check that the device operates correctly.

7.2. Transporting the device

Pay attention to the following when transporting this device.

- When carrying the device by hand, grab the designated handles and do not hold it by any other part.
- When using public transportation, follow the rules of the public transportation agency.
- The unoccupied device is suitable for land and air transport.

⚠ WARNING

- **Do not hoist the device when there is a person or object on the device. When lifting the device, always hold it by the designated handles, and be careful of its weight. Do not lift the device by holding the battery handle while the battery is inserted.**
  There is a risk of injury to the user and damage to the device.

- **Do not use the device as a seat in an automobile or other vehicle.**
  There is a risk the device may become damaged and accidents may occur. The symbol on the right indicates that the device is not intended to be used as a seat in a motor vehicle.

- **Do not attempt to maneuver the device onto an incline if the anti-tip rollers touch the ground on the incline. When the anti-tip rollers touch the ground it means that the incline is too steep for the device.**
  Maneuvering the device when the anti-tip rollers are in contact with the ground or if the incline is extremely dangerous will cause the device to lose control.

⚠ CAUTION

- **When transporting the device in an automobile trunk, or train, bus or other public transport, make sure that each component is safely secured.**
  Otherwise, there is a risk of components moving as a result of vibration or impact, and the device becoming damaged.

- **When using a wheelchair lift for vehicles, be sure to fasten the device securely.**
  There is a risk of the device falling, causing damage to the device.

- **Do not place the controller on the floor or ground with the device folded, or apply an excessive load to the controller.**
  There is a risk that the controller will be damaged, rendering the device inoperable.

- **Do not transport the device with a heavy object placed on it.**
  There is a risk of device malfunction.

- The device has not been tested against the limits specified in the Technical Specification for Interoperability relating to Accessibility for Persons with Reduced Mobility (PRM-TSI).
- Should you travel with your device on a commercial aircraft, contact the airline in advance for confirmation of the boarding procedure. You may be asked by the airline to provide the specifications of the device. Information on the device relevant to air travel is available for download from the FAQ section on the WHILL website. Please note that some airlines may refuse to transport your device.

7.2.1. Transporting the device with the device in a folded state

This section explains how to transport the device with the device in a folded state.

⚠ CAUTION

- **Fully check the surroundings and road conditions before transporting the device.**
  There is a risk of collision with the surroundings and the device tipping over.

- **Do not change the direction of the device while the wheel at the bottom of the foot rest is still in contact with the ground.**
  There is a risk of excessive force being applied to the stand wheel and the stand wheel being damaged.
- **Do not allow the device to tip over.**
  There is a risk of damage to the device.

1. **Roll the device by holding onto the arm rests.**

> Check that the arm rest adjustment screws are firmly tightened.

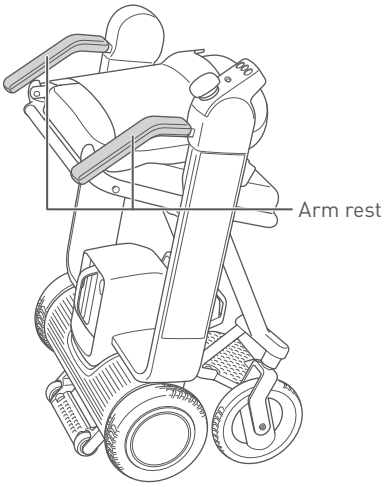

2. **When changing the direction of the device, raise up the stand wheel at the bottom of the foot rest, and tilt the device so that only the anti-tip rollers are in contact with the ground.**

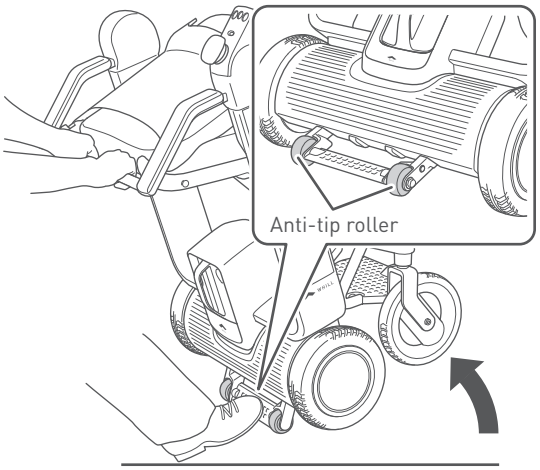

3. **With only the anti-tip rollers in contact with the ground, roll the anti-tip rollers to change the direction of the device.**

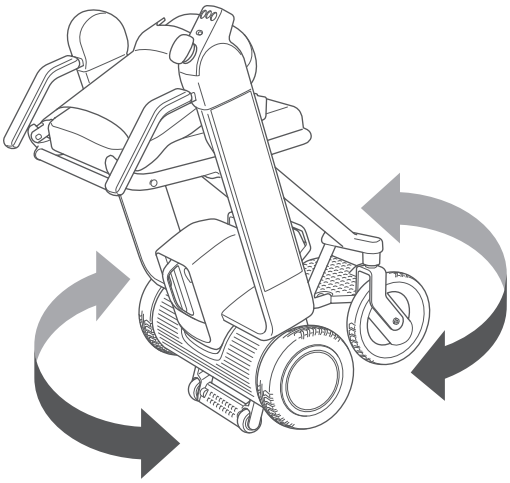

- When moving the device, fully check the surroundings and road conditions, and take care to prevent collision and falling out of the device.
- Do not apply force to the device from the sides or drag the device.

7.2.2. Loading the device into a trunk

This section explains precautions when loading this device into the trunk of an automobile or onto a carrier.

⚠ CAUTION

- **Before loading the device into the trunk of an automobile or onto a carrier, remove the battery.**
  There is a risk that the power may turn on and the device may move, causing an accident.
- **Before loading the device into the trunk of an automobile or onto a carrier, hold only parts as described in this manual.**
  There is a risk of the device being damaged.
- **The device weighs approximately 53.0 lb (24 kg) with the battery removed. Do not unnecessarily lift the device if you feel that it is heavy.**
  There is a risk of injury to the user and damage to the device as a result of falling.
- **When transporting the device or its components in an automobile trunk or other vehicles, make sure that each component is safely secured.**
  Otherwise, there is a risk of components moving as a result of vibration or impact, and the device becoming damaged.

1. **Remove the battery.**
   For the removal procedure, refer to "4.1.1. Removing the battery" on page 59.

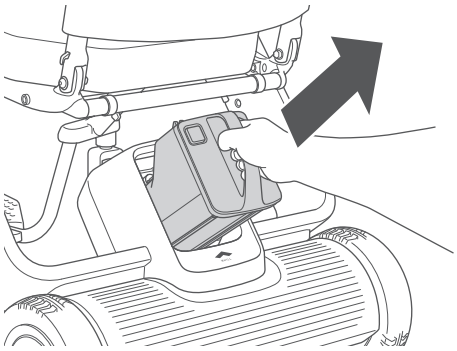

2. **Fold the device.**
   For details on how to fold the device, refer to "7.2.1. Transporting the device with the device in a folded state" on page 94.

3. **Load the device.**
   Grip the handle of the seat pipe and battery frame, and lift up and load the device.
   Take care to prevent the device from being laid down with the controller facing down.

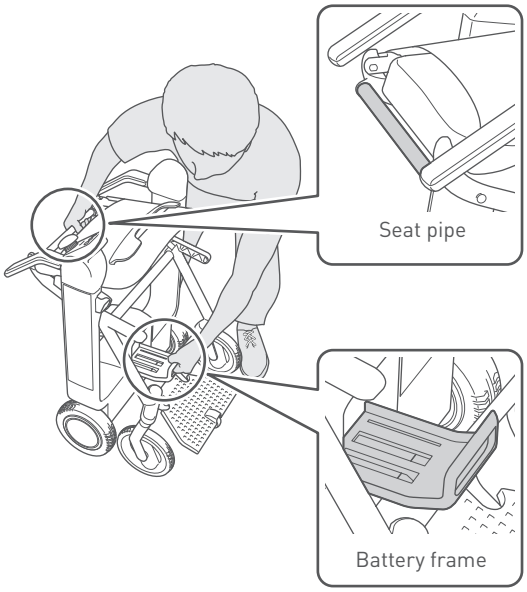

7.2.3. Removing the arm rest with controller for transportation

To remove the arm rest with controller from the device for transportation, follow the procedure below.

⚠ CAUTION

- **When bringing the arm rest with controller onto an airplane, first check with the aircraft company you are using for permission to bring it on board.**
- **Do not drop the arm rest with controller after removing it or strongly pull its cable.**
  There is a risk of the controller being damaged.
- **After removing the arm rest with controller, put it in a case or bag. Do not carry the arm rest with controller as it is. Also, ensure that the cable is not caught.**
  There is a risk of the controller being damaged.
- **The length and main material of the arm rest with controller are as follows. Refer to this information when checking permission to bring the arm rest on board an airplane.**
  - Length: 39.6 cm
  - Weight: 950 g
  - Main material: Aluminum

1. **Remove the battery.**
   For the removal procedure, refer to "4.1.1. Removing the battery" on page 59.

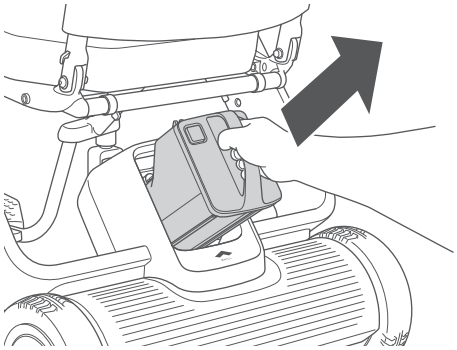

2. **Remove the seat cushion from the seat.**

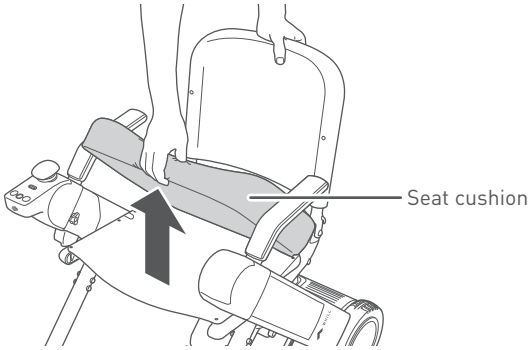

3. **Disconnect the cable connector under the seat.**

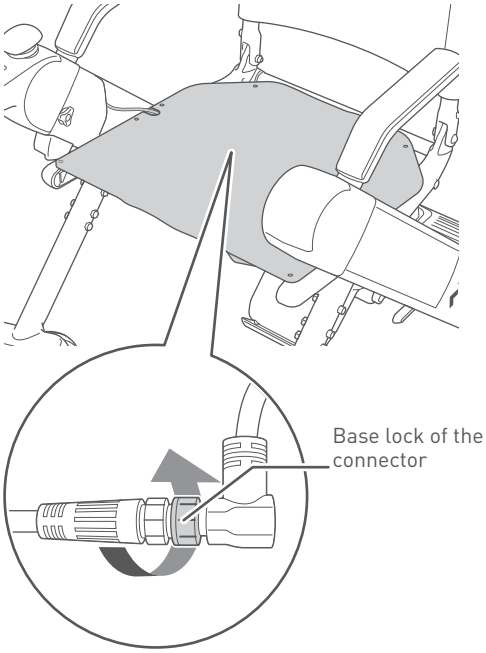

- When disconnecting the connector, hold and rotate the base lock of the connector.
  Do not rotate other parts of the connector.
- When disconnecting the connector, do not pull forcefully. There is a risk of breaking the cables.

4. **Remove the arm rest adjustment screw.**
   For the removal procedure, refer to step 2 in "3.3.1. Adjusting the height of the arm rest" on page 48.

To loosen a re-tightened screw, use a Phillips screwdriver.

5. **Remove the arm rest with controller.**

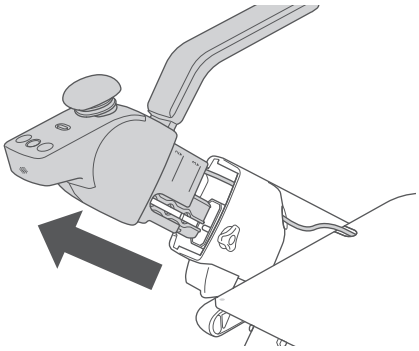

6. **Tighten the arm rest adjustment screw.**

Be careful not to lose the arm rest adjustment screw.

8. About the smartphone app

This chapter explains the app used by the WHILL Model F.

By installing the WHILL app on the device with iOS of Apple Inc. (iPhone, iPad, etc.) or smartphone with Android OS of Google LLC, it is possible to configure the settings of WHILL Model F from the app via Bluetooth Low Energy (BLE). The device utilizes Bluetooth Generic Attribute Profile (GATT) for communication.

The app can be used to lock, unlock, and control the device. Use the app within connectable distance (approximately 10 m, varying depending on environment) close to the device, otherwise degradation of wireless function (e.g., remote control, firmware update) may occur. Use the remote control function of the app as an attendant control, move the device out of the way after use, or to retrieve the device for use. For the safety information regarding radio frequency interference, refer to "1.1. EMI (Electromagnetic Interference)".

Time synchronization of WHILL Model F with the local time can also be accomplished via the app over BLE connection, but this function can only be executed by WHILL. Depending on your region, time, or smartphone type, the app may not be offered or some functions may not be used.

The paper slip where the app pairing ID and password printed is placed in the box containing arm rests. Attach it to the last page of this user manual so that you do not lose it. Ensure not to attach the slip to the device.

⚠ CAUTION

- **Ensure the device is functional in a safe space each time after setting and adjusting the speed.**
  There is a risk of unintended movement of the device.

- When unlocking or locking the device through a smartphone app, make sure that the smartphone has enough battery power. It will not be possible to lock or unlock the device if the smartphone battery runs out.
- The smartphone app cannot be used when the battery is not fully inserted into the battery compartment or when there is insufficient battery power. Install only a fully charged battery onto the device.

9. Maintenance and inspection

⚠ WARNING

- **Do not perform any adjustment, repair, or modification that is not listed in this manual.**
  There is a risk of injury and product safety risk due to damage to the device or its parts.
  Performing repair or modification which is not listed in this manual will invalidate the warranty.

- If an abnormal appearance such as a crack is found, contact your distributor or customer support.
- If you are unable to adjust or perform maintenance on parts, contact your dealer. Only trained staff are permitted to perform maintenance on the device.
- The maintenance manual is only available to service providers and not to individual users.

9.1. User maintenance

Perform the following to keep the device clean.

- If there is a significant amount of dirt on the exterior or wheels, wipe it away with a wet towel. Pay attention when washing the wheels off with water.
- If the dirt is tough to remove, use a neutral detergent. Avoid the use of petroleum-based solvents.
- Do not use a high-pressure washer.
- Use 70% EthylAlcohol disinfectant damped cloth and gently wipe subject parts.
- Replace the front and rear wheels when the treads are worn down by less than 1/64 inches (0.5 mm).
- Fill the rear wheels with air to keep them at the appropriate air pressure. When filling the rear wheels with air, insert a flathead screwdriver into the groove of the rear wheel cover to remove the rear wheel cover.
  Specified air pressure: 40 psi

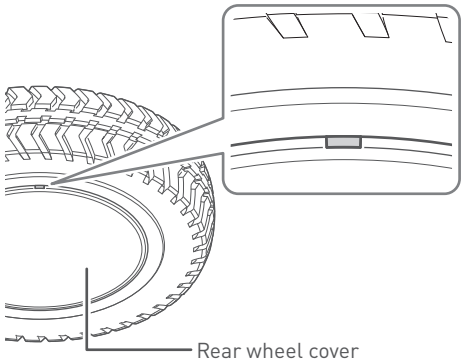

⚠ WARNING

- **Wash only the wheels of the device with water and not the device or its other parts.**
  There is a risk of malfunction due to electric shock, short circuit, and corrosion.

⚠ CAUTION

- **Do not use paint thinner, benzene, or other organic solvents for cleaning, and do not use a high-pressure washer.**
  Doing so may result in discoloration, deformation, deterioration, and damage.
- **Do not insert a sharp object into the speaker holes.**
  Doing so may damage the controller.
- **Do not apply commercially available grease or oily antirust agent/wax, etc. to the moving parts or connections of the device.**
  There is a risk that the stickiness of such substances may cause sand or other foreign substance to enter the device, causing device malfunction.

9.2. Reinstalling the joystick

If the joystick comes off the controller, follow the procedure below to reinstall it.

1. **Fit the joystick in place 90° relative to the direction of forward travel.**

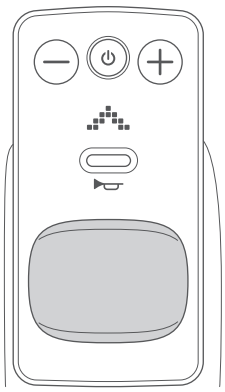

2. **Rotate the joystick clockwise by 90°.**
   Push in the joystick after rotating it to the specified position.

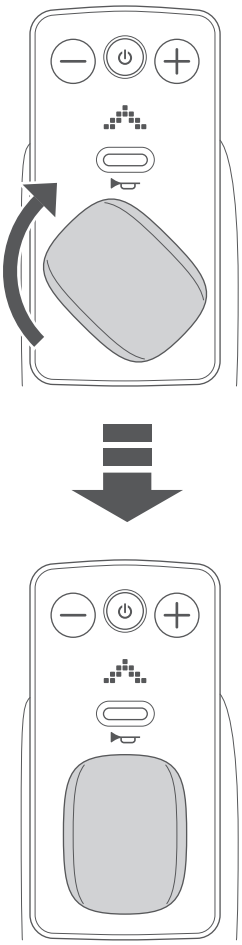

9

9.3. Inspection

It is recommended that you have the device inspected approximately once every 6 months by your dealer.
For details, consult with your dealer or customer support.

9.4. Repair, maintenance, and parts replacement performed by the manufacturer or dealer

If repair, maintenance, or parts replacement is necessary, contact your dealer or customer support.

⚠ WARNING

- **Replace the anti-tip rollers and foot pedal if they become deformed.**
  There is a risk that it may lose its functionality and the device may tip over.
- **If the device shows any abnormal signs, immediately discontinue use, and contact your dealer or customer support.**
  Using the device when it is malfunctioning can potentially cause an injury or accident.

⚠ CAUTION

- **If a component becomes worn or requires replacement, contact your dealer.**
  There is a risk of damage to the device that renders it inoperable.

9.5. Disposal

When disposing of the device, its parts and the battery or its parts, be sure to follow the local disposal guidelines. If there is anything that is unclear, consult your dealer or customer support.

9.6. About warranty information

For WHILL Model F warranty information, ask your dealers for details on the product warranty. In North America, please visit the WHILL Website (https://whill.inc) or ask your dealer for details.

9.7. Reuse information

The wheelchair is suitable for reuse. Before the wheelchair is passed on to another user, it must be serviced and hygienically prepared by a specialist dealer. When passing on the wheelchair, please remember to give these operating instructions and the address of your specialist dealer to the new user.

9.8. How to check the manufacture date of the device

■ Device

Check the 8th to 10th digits of the serial number listed on the primary identification label.

Indication	Year	Month
Indicated location	8th and 9th digits	10th digit
Notation method	20 : 2020 21 : 2021 22 : 2022 23 : 2023 24 : 2024 25 : 2025 26 : 2026 27 : 2027 28 : 2028 29 : 2029	1 to 9: January to September A: October B: November C: December

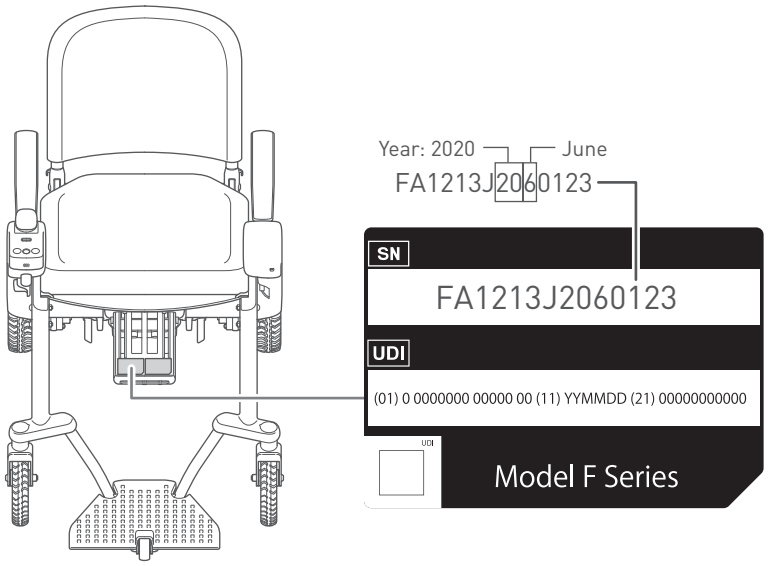

■ Battery

Check the 4th to 6th digits of the 16-digit serial number listed in the white frame of the primary identification label of the battery.

Indication	Year	Week
Indicated location	4th digit	5th and 6th digits
Notation method	0: 2020 1: 2021 2: 2022 3: 2023 4: 2024 5: 2025 6: 2026 7: 2027 8: 2028 9: 2029	01 to 52

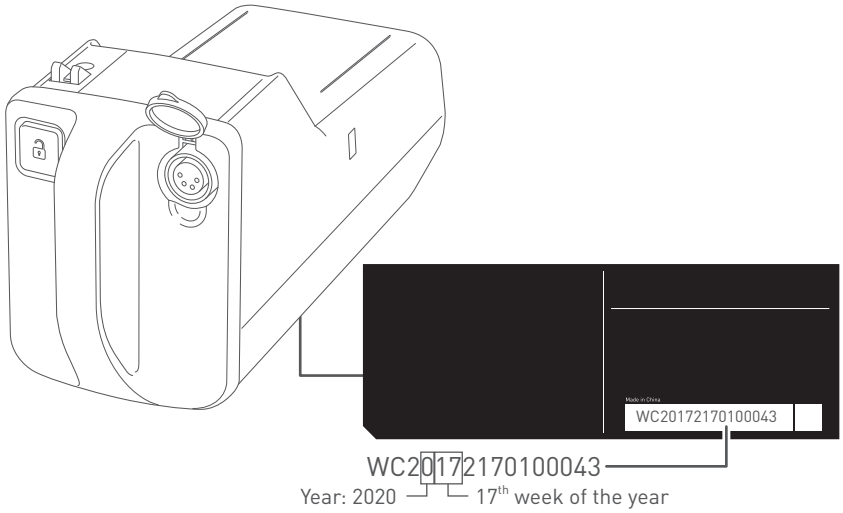

■ Charger

Check the 5th and 6th digits of the 11-digit serial number listed in the white frame of the primary identification label of the charger.

Indication	Year	Month
Indicated location	5th digit	6h digit
Notation method	0: 2020 1: 2021 2: 2022 3: 2023 4: 2024 5: 2025 6: 2026 7: 2027 8: 2028 9: 2029	1 to 9: January to September A: October B: November C: December

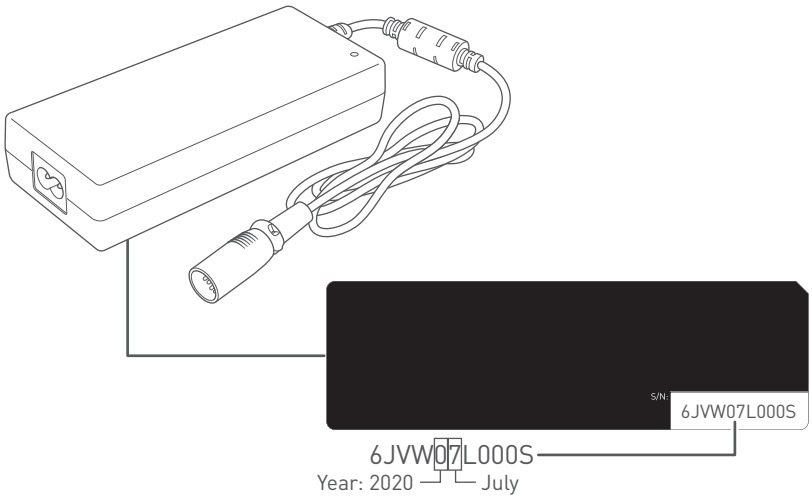

10. Troubleshooting

In the event of certain issues with the device, an error code will appear on the display.

The following is an explanation of the error display contents, causes, and resolutions.

Behavior of the device	Display Indication	Cause	Resolution
After the device stops, specific error code were displayed and unintentionally power off.	01	The controller is operated with the device in a folded state.	Unlock the device and turn the power on again.
	02	The joystick was not in neutral position when the power was turned on.	Power back on without touching the joystick.
	03	The brakes were released.	Lock the brakes and turn the power on again.
	10	The charger was connected while the power was on, or the device was turned on while connecting the charger.	Disconnect the charger from the battery.
The display shown on the right appears.	13	The battery charge level is low.	Charge the battery.
The maximum speed decreases.	24	The battery temperature dropped significantly.	Store the battery at room temperature or at least at an ambient temperature of above 0°C (32°F) until the battery temperature rises above 0°C (32°F).
The maximum speed increases.	24	The battery temperature rose above 0°C (32°F).	
The error code listed on the right and a warning sound are observed.	06	The smart key (sold separately) battery level is low.	Replace the smart key battery.
The device does not turn on. The display indication does not light.	N/A	The battery charge level is low.	Charge the battery.
		The battery is not fully inserted into the battery compartment on the rear drive base.	Insert the battery all the way in.
			Remove the battery, then attach the battery again after 10 seconds.

- Numerical error codes are displayed with a red vertical line.
- If an unlisted error is displayed or the issue persists even though a problem was handled in line with troubleshooting, contact your dealer or customer support.

11. Specifications and test results

11.1. Specifications

■ Device

Device name	WHILL Model F
Name and address of the manufacturer	WHILL, Inc. 2-1-11 Higashishinagawa, Shinagawa-ku, Tokyo 140-0002, Japan
Maximum weight limitation including occupant and any carried items	115 kg (253.5 lb)
Wheelchair class	A
Drive type	2-wheel drive
Speed changes	4 stages
Brake type	Electromagnetic brakes
Type of front wheels	Solid tire/Outside diameter 194 mm (7.64 inches)
Type of rear wheels	Standard: Air tire/Outside diameter 207 mm (8.15 inches)
Maximum allowable inclination	10°
Cruising distance	20 km (12.4 miles)
Charging time	5 hours
Operating temperature	-15 to 40°C (5 to 104°F)
Operating humidity	8 to 80%
Pivot width	1080 mm (42.5 inches)
Force needed to operate joystick	1 N
Estimated Lifetime	5 years
Noise produced by the device and level thereof	Below 65 dBA except audible warning device

Battery (Dedicated for Model F Series)

Name and address of the battery manufacturer	WHILL, Inc. 2-1-11 Higashishinagawa, Shinagawa-ku, Tokyo 140-0002, Japan
Battery type	Lithium-ion battery
Nominal voltage	25.3 V
Rated capacity (5-hour rate)	10.6 Ah

Battery charger (Dedicated for Model F Series)

Name and address of the battery charger manufacturer	WHILL, Inc. 2-1-11 Higashishinagawa, Shinagawa-ku, Tokyo 140-0002, Japan
Rated power	100-240 V, 50/60 Hz
Rated DC output current	2.4 A
Rated DC output voltage	28.49 V
Operating temperature and charging temperature	0 to 40°C (32 to 104°F)
Supported battery type	Lithium-ion battery
Rated capacity of battery counterpart (5-hour rate)	10.6 Ah
DC connector pinout	Pin 1: +
	Pin 2: -
	Pin 3: Detection
	Pin 4: Not connected
Type reference of the battery charger	Off-board battery charger
Rated current of user-accessible protective fuses	There are no user-accessible fuses.

Antenna

Function	Frequency	Maximum output power
Bluetooth Low Energy	2402 - 2480 MHz	6 dBm

11.2. Dimensions and test results

Mass of the test dummy used in testing: 115 kg (253.5 lb)

Item	Minimum value	Maximum value
Total length (including foot rest)	-	935 mm (36.8 inches)
Overall width	555 mm (21.8 inches)	605 mm (23.8 inches)
Total length (when folded)	-	465 mm (18.3 inches)
Total width (when folded)	555 mm (21.8 inches)	605 mm (23.8 inches)
Height (when folded)	855 mm (33.7 inches)	907 mm (35.7 inches)
Total mass (including battery)	-	26.7 kg (58.9 lb)
Total mass (excluding battery)	-	24 kg (52.9 lb)
Battery weight	-	2.7 kg (6 lb)
Static stability downhill	-	20°
Static stability uphill	-	20°
Static stability sideways	-	15°
Obstacle climbing height (during forward travel)	-	35 mm (1.4 inches)
Maximum speed forward	-	6 km/h (3.7 mph)
Seat angle (when seat cushion is installed)	-	6°
Effective seat depth	-	400 mm (15.7 inches)
Effective seat width	-	450 mm (17.7 inches)
Seat surface height from ground at front edge	443 mm (17.4 inches) Rear wheels side	495 mm (19.5 inches) Front wheels side
Back support angle	-	104°
Back support height	-	386 mm (15.1 inches)
Height from foot rest to seat	-	348 mm (13.7 inches)
Leg to seat surface angle	-	84°
Arm rest to seat distance	175 mm (6.9 inches)	215 mm (8.5 inches)
Front location of arm rest structure	670 mm (26.3 inches)	710 mm (28 inches)
Horizontal location of axle	-	43 mm (1.7 inches)
Minimum turning radius	-	780 mm (30.7 inches)
Minimum braking distance	-	740 mm (29.1 inches)

This device conforms to the following standards;

a) Requirements and test methods for static, impact and fatigue strengths (ISO 7176-8).

b) Power and control systems for electric wheelchair s - requirements and test methods (ISO 7176-14).

c) Climatic test in accordance with ISO 7176-9.

d) Requirements for resistance to ignition in accordance with ISO 7176-16.

Declaration of Conformity for CE Marking

Hereby, WHILL, Inc. declares that WHILL Model F is in compliance with Directive 2014/53/EU, Directive 2011/65/EU and Regulation (EU) 2017/745. The full text of the EU declaration of conformity is available at the following internet address: https://whill.inc/

Disposal in the European Union

The device, battery and accessories are durable components. Improper disposal of waste products may result in the release of environmentally hazardous substances. This symbol (picture left) means that this device must be disposed of in accordance with the European Directive 2012/19/EC (WEEE Directive). To protect the environment, have the device picked up at the end of its life at a local recycling center.

Symbols

The symbols below may be found in this manual or the labels on the device.

Symbol	Meaning	Symbol	Meaning
SN	Serial number		Refer to user manual (Safety color: Blue)
UDI	Unique device identification		Refer to user manual
REF	Reference number		Refer to user manual
MD	Medical device		Maximum load capacity
EC REP	Authorized representative in the European Community		Direct current
	Manufacturer		Alternating current
	Not intended to be used as a seat in a motor vehicle (Safety color: Red)		Time-lag miniature fuse-link
	No standing on the foot rest (Safety color: Red)		Class II equipment
	No access for people with active implanted cardiac devices (Safety color: Red)		For indoor use only
MR	Magnetic resonance unsafe (Safety color: Red)		Keep dry
	No open flame; Fire, open ignition source and smoking prohibited (Safety color: Red)		Temperature limit
	General warning sign (Safety color: Yellow)		Humidity limitation
	Warning; Magnetic field (Safety color: Yellow)		Fragile, handle with care
	Warning; Electricity (Safety color: Yellow)		This way up
	Warning; Explosive material (Safety color: Yellow)	Meaning of safety color • Red: Prohibition • Yellow: Warning	• Blue: Mandatory action

Index

A

Accessories 21
Adjusting the maximum speed 76
Adjusting the speed 82
Adjustment procedures 47
Anti-tip roller 19
App 100
Arm rest 19
  Adjusting the height 43
  Changing the space 50
Assembly procedures 25
  Adjusting the height of the arm rest 43
  Arm rests 29
  Battery 46
  Cable 44
  Color plate 28
  Seat cushion 45
  Unfolding the device 26
Automobile trunk 93, 96

B

Back support 19, 85
Battery 19, 23, 56, 58
  Charger indicator 67
  Charging 60
  Checking the battery charge level 65, 76
  Removal 59
Battery charge level 76
Battery LED 58, 65
Battery lock release button 58
Brake 84
Brake release lever 19, 84

C

Charger 19, 58
Charger indicator 67
Charging procedure 60
Charging the battery 56
Contact information 117
Controller 19
  Switching the position 53

D

Device information 20
Dimensions 112
Display 19, 108
Driving 77

E

Electromagnetic interference 10
EMI 10
Error code 108

F

Folding Procedure 86
Foot rest 19
Front wheels 19
Functions of parts 18

G

Getting in the device 70

H

Horn button 19, 76
How to fold the device 87
How to unfold the device 89

I

Inspection 102, 105
Inspection before getting in the device 69

J

Joystick 19, 80, 81, 82

L

Label 16
Lap belt 74

M

Maintenance 102, 105
Moving 77, 80

N

Names of parts 18, 22

O

Operating procedures 68

P

Parts replacement 105
Power button 19, 75

R

Rear wheels 19

Reinstalling the joystick..... 104

Releasing the brakes 84

Removal

Battery..... 59

Removing the battery..... 59

Repair..... 105

Reporting of serious incident 16

Reuse information 105

S

Safety precautions 6

Seat cushion 23

Serial number 20, 106, 107

Smartphone 100

Smartphone app 100

Speaker 19

Specifications..... 110

Speed select button 19

Stopping 81

Storage..... 92

Symbols..... 114

T

Test results 110

Transporting the device 93

Troubleshooting 108

Turning 81

Turning on the power..... 75

U

User maintenance 102

W

Warning labels 16

Contact information

The dealer/distributor from whom the device was purchased will handle requests for repair, maintenance and parts replacement. To determine whether a loaner device is provided during servicing, contact the dealer/distributor.
Ask the dealer/distributor for details on the product warranty and give them your up-to-date contact information in case of product safety notices or product recalls.

Dealer/distributor

Manufacturer

WHILL, Inc.
2-1-11 Higashishinagawa, Shinagawa-ku, Tokyo 140-0002, Japan

Contact information in regions

- EU
  WHILL Europe BV
  Johan Cruijff Boulevard 65 1101 DL Amsterdam
  The Netherlands
- North America
  WHILL, Inc.
  303 Twin Dolphin Dr., 6th Floor, Redwood City,
  CA 94065
  (844) 699-4455 us.info@whill.inc
- APAC
  WHILL China CO., LTD.
  South Side, Floor 1, Building 6, No. 851,
  Chengyun Road,
  Xiangcheng District, Suzhou, Jiangsu, China
  (86)512-6856-2019

  https://whill. Inc

Authorized representatives and sponsors

- EU
  CMC Medical Devices
  C/ Horacio Lengo n18 C.P 29006 Málaga-Spain
- AUS
  Aidacare Pty Ltd
  Building 3A, 1 Moorebank Avenue, Moorebank,
  NSW, 2170, Australia
- CHE
  CMC Medical Devices GmbH.
  Rigistrasse 3, 6300 Zug, Switzerland
- UK
  M/s CMC Medical Devices Ltd.
  Office 32 19-21 Crawford Street, London, United Kingdom
- NZ
  CARSL Consulting
  24 Side Road, RD 10, Parkhill Farm, Hastings
  4180, New Zealand

App pairing ID and password

Stick the label printed with the app pairing ID and password provided with the device in the box above. For security purposes, it is advised not to stick the label onto the actual device.

REF 32-14016-1-05-2026-03-31