Delto Gripper

DG – 4F – M

Hardware Manual

English

Ver. 2.0.0

INFORMATION

Copyright

This user manual was created by Tesollo, and all copyrights belong to Tesollo, and any reproduction based on this manual and distribution to third parties is prohibited.

Notice of revisions to the user guide

This documentation is subject to revision for technical improvements.

Manual Version: 2.0.0 English (2026.06)

© 2026 Tesollo Inc. All rights reserved

Tesollo Corporation

Headquarters: 26F, 165, Convensia-daero, Yeonsu-gu, Incheon, Republic of Korea
Office: 26F, A-Building, 43, Iljik-ro, Gwangmyeong-si, Gyeonggi-do, Republic of Korea
Support T: +82 2 6914 6620
E: support@tesollo.com
H: http://en.tesollo.com/

Table of Contents

Chapter 1. General Information 5

1.1 User Manual Information 5

1.1.1 Danger and warning signs 5

1.1.2 Documents provided by TESOLLO 6

1.2 Target Model for this Document 6

1.3 Warranty 6

1.4 Product Package Contents 6

1.5 Included Items 6

Chapter 2. Basic Safety Precautions 7

2.1 Applications for DG-4F-M 7

2.2 Improper Application of DG-4F-M 7

2.3 Structural Modification 7

2.4 Replacement Parts 7

2.5 Operating Environment and Working Conditions 8

2.6 Recommended User Qualification 8

2.7 Wearing Protective Gear 8

2.8 Cautions for Safe Use of Equipment 9

2.9 Cautions During Operation 9

2.10 Cautions in Case of Equipment Failure 9

2.11 Cautions During Disposal 9

2.12 Cautions for Safety at Work 10

2.12.1 Cautions while handling the equipment 10

2.12.2 Cautions for dangerous operation 10

© 2026 Tesollo Inc. All rights reserved

2.12.3 Cautions against electric shock 11
2.12.4 Cautions for magnetic and electromagnetic fields 11
Chapter 3. Technical Information 12
3.1 DG-4F-M Basic Information 12
3.1.1 DG-4F-M dimensions 13
3.1.2 DG-4F-M Zero Position 14
3.2 Technical Information of DG-4F-M 15
3.2.1 How to link 15
3.2.2 Adapter frame dimensions 16
3.3 Basic Information about Motors 17
3.3.1 Motor sequence & Range of Motion 17
3.3.2 Motor directions 19
Chapter 4. Connector, Switch, LED Information 20
4.1 Connector Information 20
4.2 Switch, LED Information 21

© 2026 Tesollo Inc. All rights reserved

Chapter 1. General Information

1.1 User Manual Information

- This document provides information for the safe and proper use of DG-4F-M.
- This document must be accessible to the user at all times as it contains integrated information, including safety guidelines for safe operation of DG-4F-M.
- Images are used in this document to help the user understand the design of parts that are different from the actual product and complicated parts.
- This also applies to the guidelines contained in the documents listed in Section '1.1.2 Documents provided by TESOLLO'

1.1.1 Danger and warning signs

⚠ **WARNING: Risk of Electric Shock**

- Contact with live electrical parts may result in death.
- Turn off the power supply before performing assembly, adjustment, or maintenance.
- Ensure power is completely disconnected and no residual current remains before starting work.
- Only authorized personnel may enter or operate within the work area.

⚠ **CAUTION: Risk of Entanglement**

- Keep body parts clear of moving components during operation.
- Serious injury may occur if clothing or limbs become caught.

⚠ **CAUTION: Hot Surface**

- Surface may remain hot during and after operation.
- Avoid contact to prevent burns.

⚠ **WARNING: Risk of Falling Objects**

- Serious injury or death may result from falling objects held by the equipment.
- Do not exceed the maximum grasping load.
- Do not enter the equipment's operating area during operation.
- Never leave grasped objects unattended.
- Always wear appropriate personal protective equipment (PPE).

© 2026 Tesollo Inc. All rights reserved

1.1.2 Documents provided by TESOLLO

- TESOLLO product catalog data sheet
- 3D modeling & 2D drawing
- User Manual for the product
- Other product-related information

1.2 Target Model for this Document

- DG-4F-M

1.3 Warranty

- One-year warranty is provided from the delivery date of the gripper, if it is used for its intended purposes while complying with the following regulations.
  - Compliance with the operating limits
  - Compliance with operating environment and working conditions

    See '3.1 DG-4F-M Basic Information'
- The warranty does not cover failures caused by user negligence, consumable items or wear parts, or cosmetic damage incurred during use, including scratches and wear.

1.4 Product Package Contents

- The products provided include the following.
  - Delto Gripper series
  - User manual
  - Package of components

1.5 Included Items

No.	Included Item	Quantity	Remarks
1	Product Body	1	Based on the purchased model
2	Adapter Frame	1	
3	Adapter Frame Bolt Set	1	
4	USB (4 GB)	1	Includes user manual, SDK, UI, and kinematics data
5	Power Cable	1	
6	Ethernet Cable	1	

© 2026 Tesollo Inc. All rights reserved

Chapter 2. Basic Safety Precautions

2.1 Applications for DG-4F-M

- DG-4F-M is developed to hold or fix a target object. Its specific applications are as follows.

A. Pick and Place	**D. Assembly**
B. Bin Picking	**E. Fastening**
C. Machine Tending	**F. A service robot that mixes various tasks**

- DG-4F-M can be used only for the performances listed in the 'Chapter 3 Technical Information'.
- DG-4F-M is produced for industrial, service, and research purposes.
- Guidelines for proper use of DG-4F-M are included in this document.

2.2 Improper Application of DG-4F-M

- The use of DG-4F-M beyond its performance limit is regarded as improper use.
- See '3.1 DG-4F-M Basic Information'

2.3 Structural Modification

When structural modifications are attempted

- Modifying, altering, or reworking equipment components, such as by adding threads, holes, or safety devices, may cause the product to malfunction or become damaged.
- Any structural modification must be approved by TESOLLO.

2.4 Replacement Parts

When unauthentic replacement parts are used

- The use of unauthentic replacement parts may cause human casualties or equipment failure during work. Therefore, only genuine and authentic replacement parts approved by TESOLLO must be used.

© 2026 Tesollo Inc. All rights reserved

2.5 Operating Environment and Working Conditions

Operating environment and working conditions requirements

- Improper operating environment or working conditions may cause problems with equipment safety, leading to serious injuries to the user or serious defects in the equipment, such as a reduction in the service life.
- Therefore, the suitable environment described in '3.1 DG-4F-M Basic Information' must be maintained.

2.6 Recommended User Qualification

Unqualified users

- Unqualified users may cause serious injuries to themselves or damage to the equipment. Therefore, the following regulations must be followed.
  - All tasks must be performed by verified users.
  - Users must familiarize themselves with the assembly of the equipment and study the user manual before they use the equipment.
  - They must comply with domestic and general safety regulations.

Recommended users

- Users with extensive experience and knowledge can perform machine or system-related tasks. They should have the ability to perceive and prevent risks in advance based on guidelines and safety regulations.

2.7 Wearing Protective Gear

Wearing personal protective equipment

- Wearing personal protective equipment can protect users by shielding them from harmful environments and preventing harms of the accidents.
  - Be aware of regulations for safety and accident prevention and wear protective gear recommended for the work environment.
  - Wear goggles, safety suit, and helmets when around moving machinery and environment exposed to toxic chemicals.
  - Wear protective gloves while working with sharp objects.
  - Wear heat-resistant gloves while working with hot objects.

© 2026 Tesollo Inc. All rights reserved

2.8 Cautions for Safe Use of Equipment

Improper use by the user

- Improper adjustment or assembly may degrade the safety of equipment and cause serious injuries and equipment damage depending on the severity. Thus, the listed guidelines must be complied with.
  - Completely block the sources of interferences with work.
  - Use equipment for its original purpose.
  - Comply with safety precautions and assembly regulations.
  - Avoid being exposed to environment with corrosive materials.
  - Comply with regulations for equipment management and maintenance.
  - Comply with regulations for safety, accident prevention, and environmental protection according to the equipment operation environment.

2.9 Cautions During Operation

Cautions during equipment operation

- Improper handling of equipment during operation may damage product safety and cause serious injuries or product damage.
- When the object held by equipment falls or equipment parts are abnormally released, serious injuries or equipment damage can be caused. Therefore, it is necessary to identify and specify dangerous zones in safe ways.
- Entry into the dangerous areas during equipment operation must be prohibited.

2.10 Cautions in Case of Equipment Failure

- After removing the equipment from the work line, report the failure to the department or person in charge.
- Perform the maintenance and repair of the equipment through TESOLLO.
- Do not use the equipment until the maintenance is completed.

2.11 Cautions During Disposal

Disposal

- Improper disposal of components can cause serious injuries to the user or equipment defects depending on the degree of harm to parts or environment.
- Disposal must be performed properly by complying with local regulations or through decomposition and recycling of equipment components.

© 2026 Tesollo Inc. All rights reserved

2.12 Cautions for Safety at Work

- Follow the recommended safety distance.
- Do not deactivate safety devices.
- Identify dangerous areas and wear protective gear before work.
- Perform equipment installation, modification, maintenance, and calibration in power off mode.
- Do not approach the equipment when the power supply is switched on.
- Do not enter the equipment workspace.
- Ensure that the emergency off (EMO) button is accessible at all times.

2.12.1 Cautions while handling the equipment

Improper handling

- Improper handling causes defects in equipment safety and may lead to serious injuries to the user or component defects.
  - All tasks must be performed by qualified users.
  - The equipment and user must be protected from dangerous work.
  - Relevant regulations to prevent accidents must be followed.
  - Precautions for moving machinery and collision prevention and the use of appropriate transport equipment are required.
  - Install work zone fences and prohibit entry of persons.
  - Do not work in the absence of the manager.
  - Do not leave the object held in the equipment unattended.

2.12.2 Cautions for dangerous operation

Abnormal operation

- Equipment malfunctions may cause serious injuries to the user. Malfunctions mainly occur in the following situations and emergency power off is required.
  - Power supply is terminated, but equipment is reactivated by residual power.
  - The equipment is operated by an improperly connected drive.
  - Operational mistakes, wrong parameters, and software errors occur.

© 2026 Tesollo Inc. All rights reserved

2.12.3 Cautions against electric shock

When electronic equipment is in operation

- The following items must be followed because parts in contact with electric current may lead to fatal electric shocks in severe cases.
  - Work with electronic equipment must be performed by qualified electrical and mechanical technicians.
  - Electrical wires must be connected or disconnected only in power-off state and safety is secured.
  - Check the equipment cover and protective devices. Do not touch active parts.
  - Do not touch equipment terminals in power-on state.

Cautions against static electricity

- Equipment parts or connected elements may cause static electricity. Touching static charges may cause a shock and injury.
  - The equipment manager must check whether these elements comply with safety regulations.
  - They must be tested by an electrical technician in the same environment as the actual work conditions.
  - Safety must be ensured through regular inspections.

2.12.4 Cautions for magnetic and electromagnetic fields

During work in magnetic and electromagnetic fields

- Work in magnetic and electromagnetic fields may cause serious injuries.
  - Persons with metal implants or hearing aids should not enter the zones without the consent of a doctor.
  - Do not use high-frequency or wireless devices near the zones.
  - Control systems and drive systems are operated at different intervals.
  - In the presence of high risk in the work zone, the EMC test for environmental verification is required.

© 2026 Tesollo Inc. All rights reserved

Chapter 3. Technical Information

3.1 DG-4F-M Basic Information

No.	Contents	DG-4F-M
Mechanical Spec.		
1	Pinching Payload (Rated, Max) [kg] * It may vary depending on the object's shape or surface material.	3, 5
2	Envelop Payload (Rated, Max.) [kg]	10, 20
3	Total DoF (DoF / Finger + Base DoF)	18 ((4)+2)
4	Product Weight [g]	1,494
5	Maximum force at the fingertip of each finger [N]	97
6	Default Fingertip Color and Silicone Hardness * May vary depending on the fingertip type.	White + Gray, 40 Shore A
Electrical Spec.		
1	Motor Type	BLDC Motor
2	Rated Voltage [V]	24
3	Maximum Current Consumption [A]	10
4	No-Load Speed of Each Joint [RPM]	75
5	Peak Torque of Each Joint (Stall torque) [Nm] *Developer Mode : Stall torque is always available. *Operator Mode and SDK: Stall torque is only available when 'Torque Limit Mode' is off. Caution!! Using 'Torque Limit Mode' off in Operator Mode or using stall torque in Developer Mode may cause a rapid increase in product temperature and potential product damage. Please note that repairs (A/S) may be difficult in case of failure.	2
6	Rated Torque of Each Joint [Nm]	0.4
7	Absolute Encoder Resolution of Each Joint [bit]	12
8	Repeatability of Each Joint [deg]	0.1
Communication		
1	Communication Protocol	Modbus(RTU, TCP) Ethernet(TCP/IP)
2	Control Cycle [Hz]	333
3	Operator Mode Communication Cycle(Modbus-RTU , Modbus-TCP(1)) [Hz] *Varies depending on the control environment.	33 , 800(1)
4	Developer Mode Communication Cycle (Ethernet(TCP/IP) (1)) [Hz] *Varies depending on the control environment. (1) Measurement environment for communication cycle * OS : Windows 10 * CPU : AMD Ryzen 5 5600 6-Core Processor * RAM : 16GB	500(1)
Other Information		
1	Warranty Period [Months]	12

ⓒ 2026 Tesollo Inc. All rights reserved

3.1.1 DG-4F-M dimensions

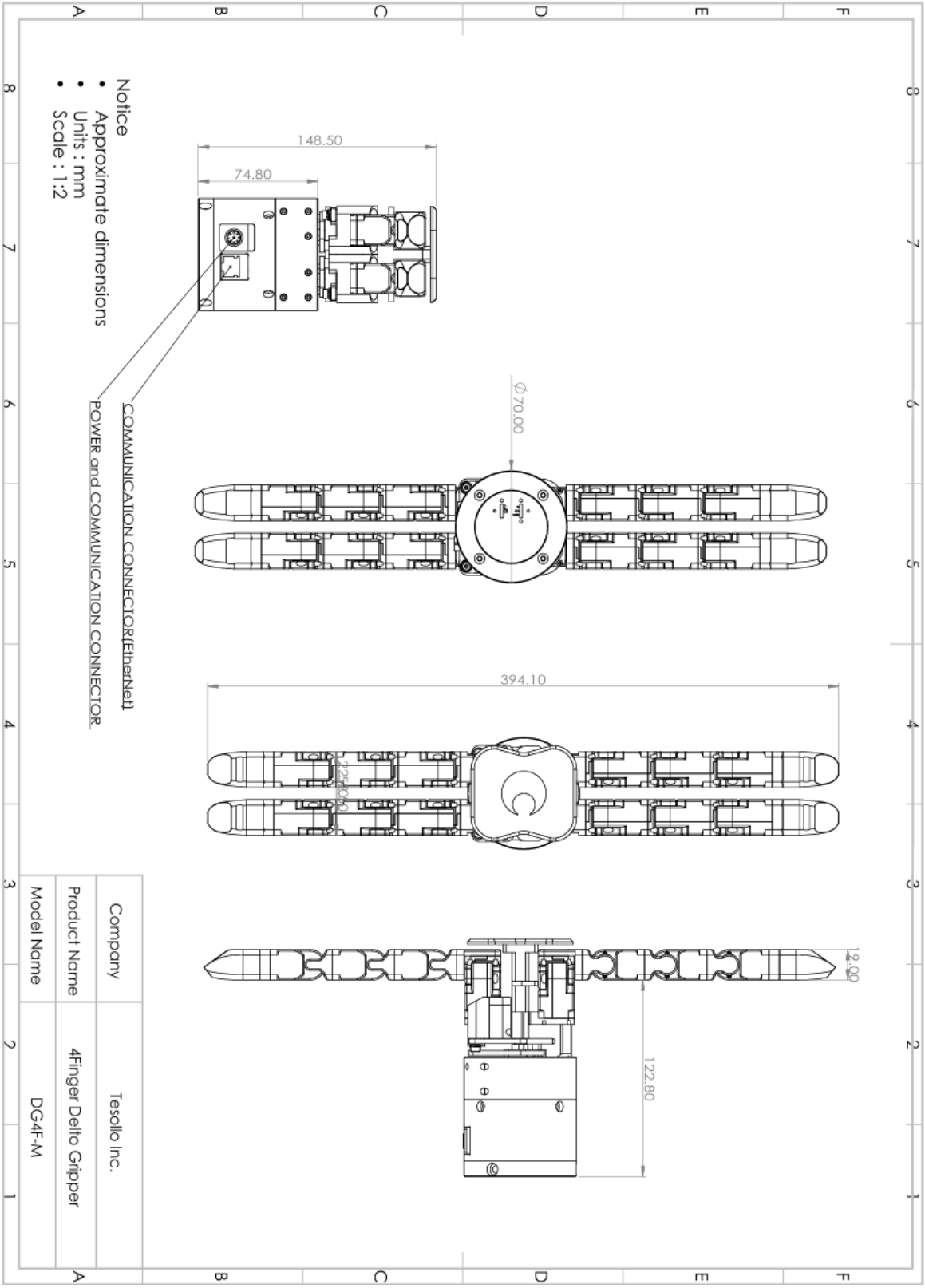

© 2026 Tesollo Inc. All rights reserved

3.1.2 DG-4F-M Zero Position

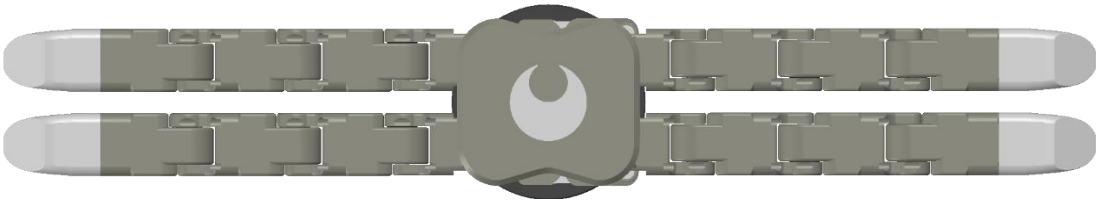

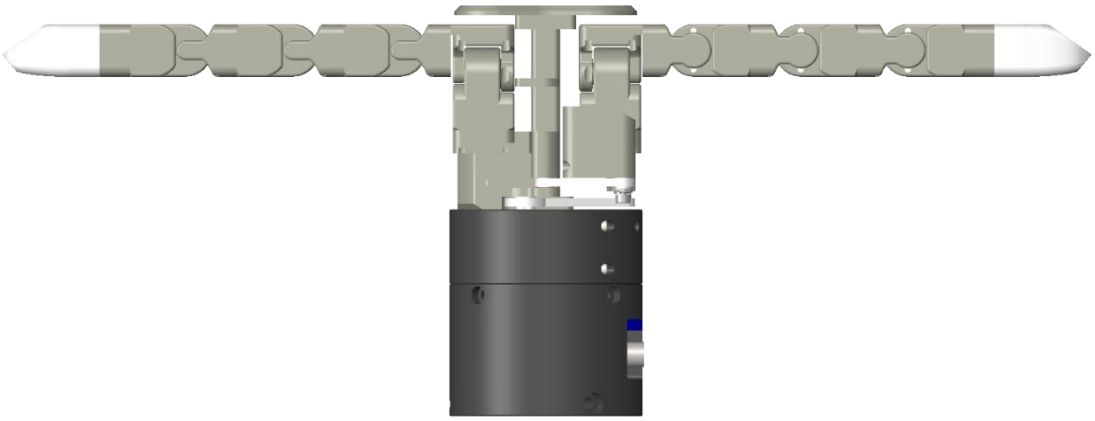

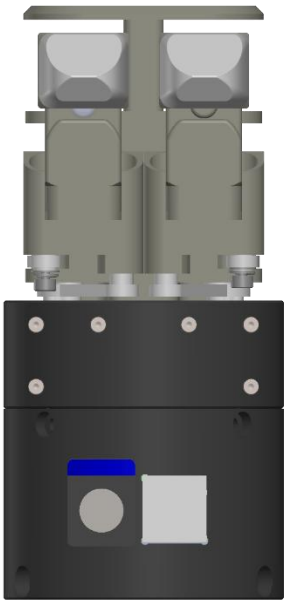

© 2026 Tesollo Inc. All rights reserved

3.2 Technical Information of DG-4F-M

3.2.1 How to link

① Attach the provided adapter frame to the end of the collaborative robot.
※ Standard : ISO 9409-1-50-4-M6

② Fix the adapter frame and DG-4F-M as shown in the figure below.

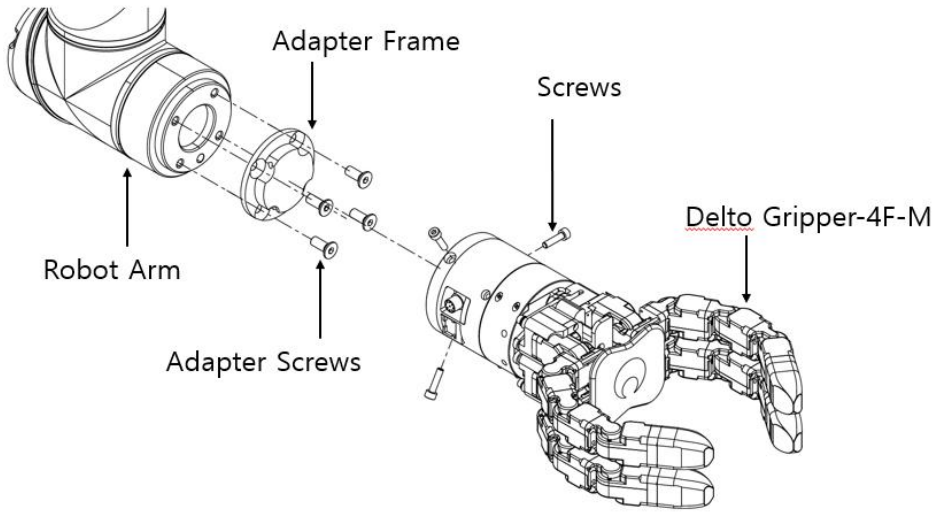

ⓒ 2026 Tesollo Inc. All rights reserved

3.2.2 Adapter frame dimensions

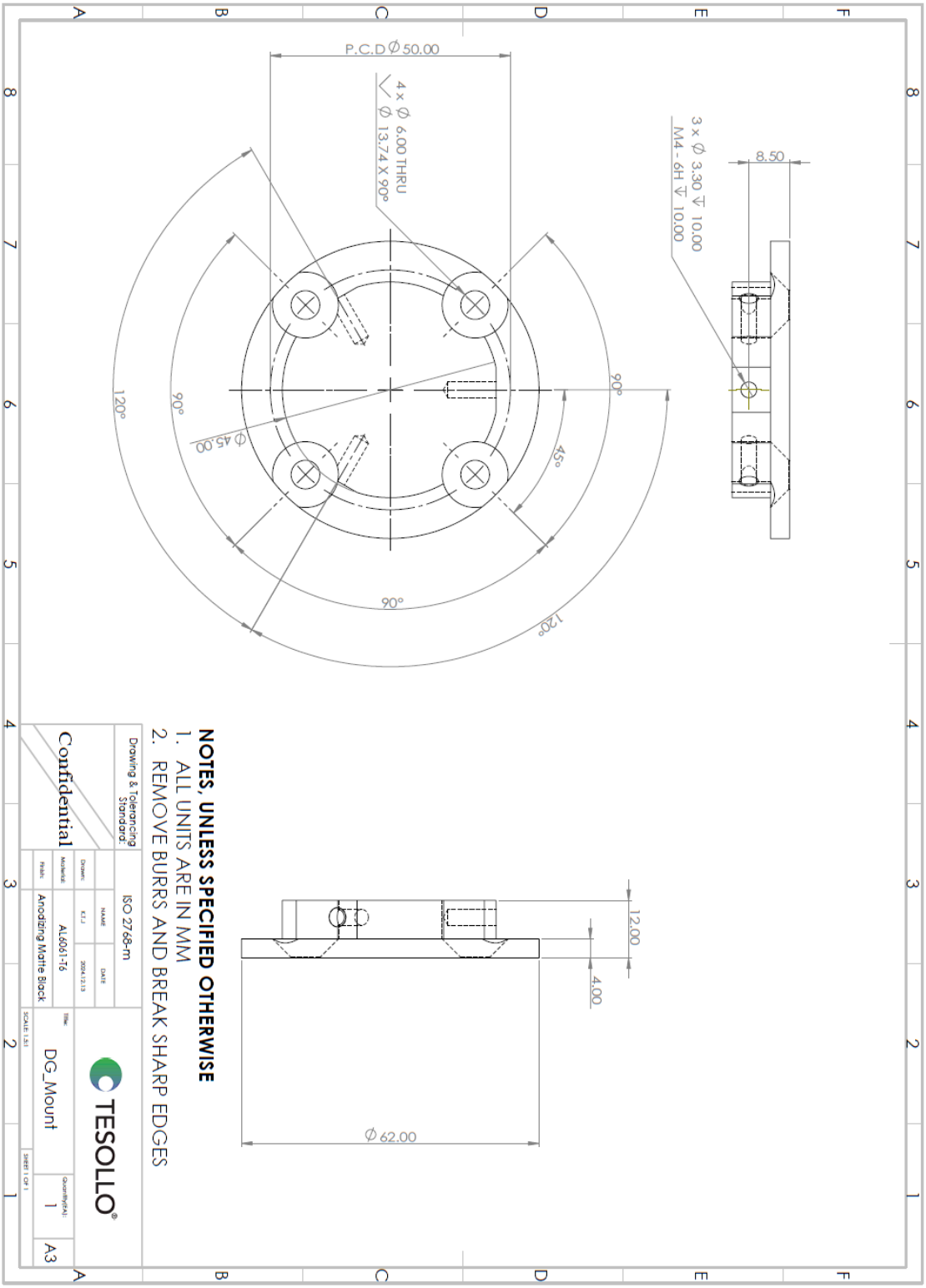

© 2026 Tesollo Inc. All rights reserved

3.3 Basic Information about Motors

3.3.1 Motor sequence & Range of Motion

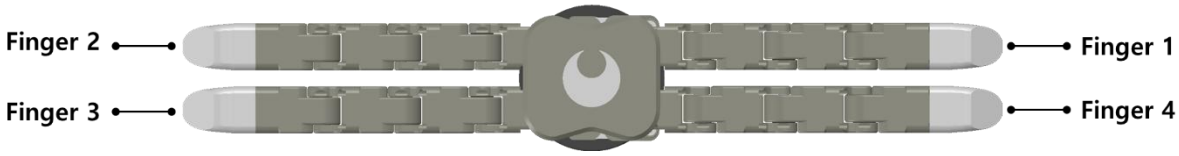

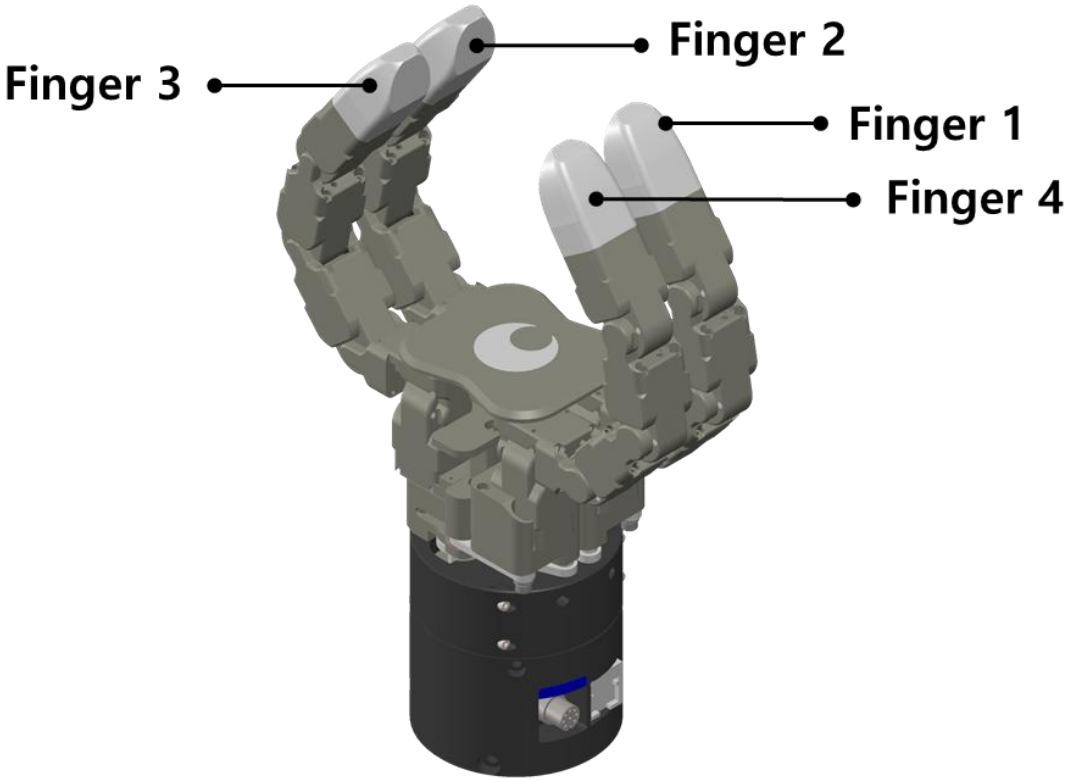

ⓒ 2026 Tesollo Inc. All rights reserved

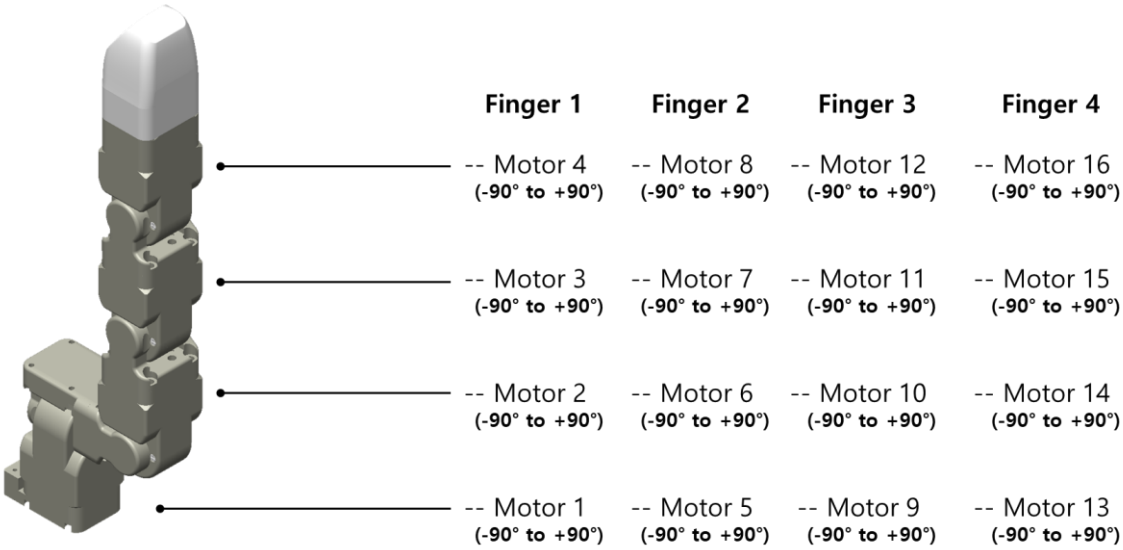

<Finger 1 to Finger 4>

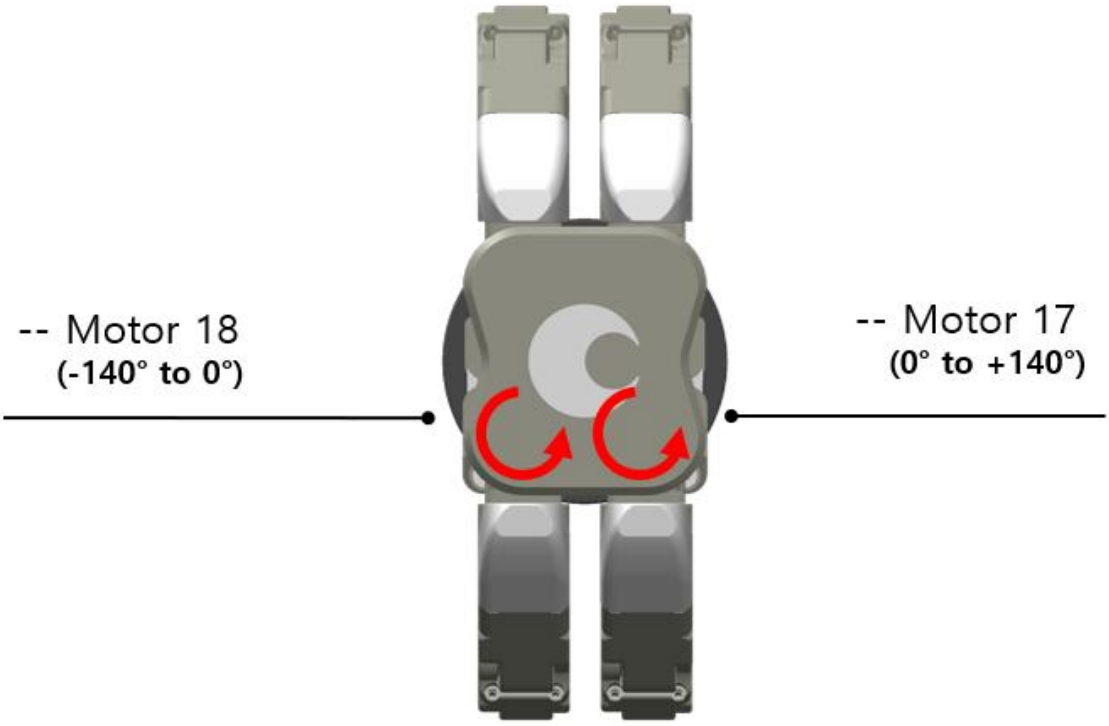

< Base Joint >

© 2026 Tesollo Inc. All rights reserved

3.3.2 Motor directions

* The direction of the arrow is the positive direction.

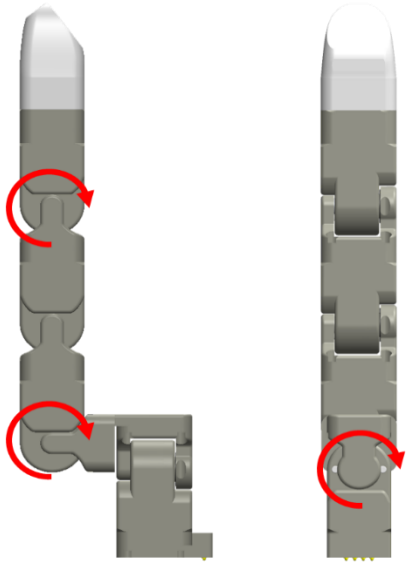

< Finger 1 to 4>

< Base Joint >

ⓒ 2026 Tesollo Inc. All rights reserved

Chapter 4. Connector, Switch, LED Information

4.1 Connector Information

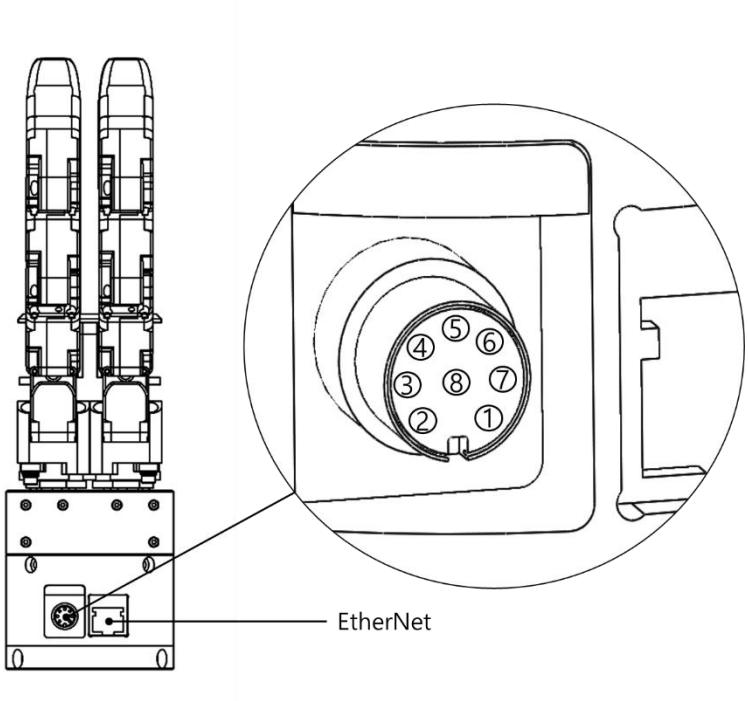

No.	Color	Connection
1	White	RS485 A
2	Brown	RS485 B
3	Green	Digital Output 1
4	Yellow	Digital Output 0
5	Gray	GND
6	Pink	Digital Output 2
7	Blue	Digital Input 0
8	Red	24V DC
* Rated torque requires a supply of 10A or more . * Input power DC 24V		

© 2026 Tesollo Inc. All rights reserved

4.2 Switch, LED Information

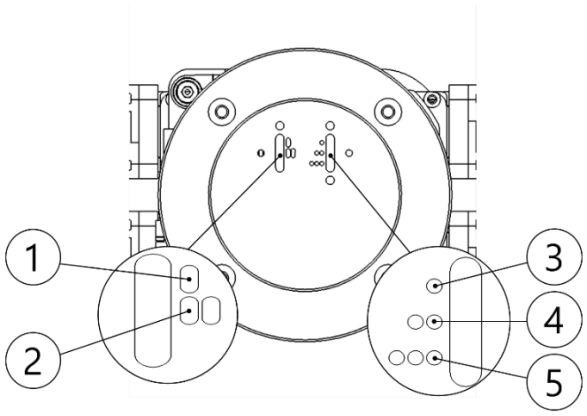

No.	System Modes	
①	Operator Mode	●●● x 1 [All LEDs Blink Once]
②	Developer Mode	●●● x 2 [All LEDs Blink Twice]
No.	**Communication Modes**	
③	RS485	○●○ [Yellow LED is On]
④	EtherNET	○○● Socket Connect : Blue LED is On Socket Disconnect : Blue LED Blinks
⑤	Not used	Not used

① **Operator Mode:** This mode uses the internal controller of the product for operation. It supports the Modbus Protocol, allowing users to easily control the robotic hand by simply modifying the register map or using the provided UI.

② **Developer Mode:** This mode allows the user to control the robotic hand using a custom-developed controller. It enables the reception of information from each joint of the robotic hand, allowing direct control of each joint.

* When power is first applied, the control mode LED blinks, followed by the operation of the communication mode LED.
* Developer Mode is only available via Ethernet communication.
* If there is an issue with switch operation or communication, the red LED blinks.

*** Operator Mode: stall torque only available with 'Torque limit mode' off**
*** Developer Mode: Always use stall torque**

ⓒ 2026 Tesollo Inc. All rights reserved

TESOLLO